XC6206P152MR

Low ESR Cap.Compatible Positive Voltage Regulators

Features

Maximum Output Current	: 250mA (5.0V type)
Dropout Voltage	: 160mV @ IOUT=100mA (5.0V type)
Maximum Operating Voltage	: 6.0V
Output Voltage Range	: 1.5V（100mV steps）
Highly Accurate	: ±2% (±30mV@VOUT<1.5V) (±1% @VOUT≥2.0V)
Low Power Consumption	: 1.0μA (TYP.)
Operational Temperature Range	: -40°C ~ 85°C
Ultra Small Package	: SOT-23
Low ESR Capacitor	: Ceramic capacitor compatible

CMOS Low Power Consumption
Dropout Voltage : 160mV @ 100mA
: 400mV @ 200mA
Output Current : More Than 250mA (5.0V type)
Highly Accurate : ±2%
Output Voltage Range : 1.5V
Low ESR Capacitor Compatible

Applications

Battery powered equipment
Reference voltage sources
Cameras, video cameras
Portable AV systems
Mobile phones
Portable games



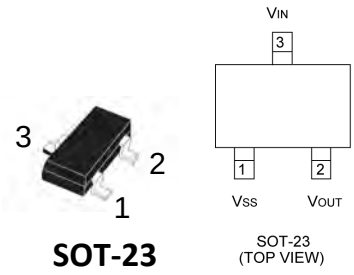

General Description

The XC6206P152MR series are highly precise, low power consumption, high voltage, positive voltage regulators manufactured using CMOS and laser trimming technologies. The series provides large currents with a significantly small dropout voltage.

The XC6206P152MR consists of a current limiter circuit, a driver transistor, a precision reference voltage and an error correction circuit.

The series is compatible with low ESR ceramic capacitors.

The currrent limiter's foldback circuit also operates as a short protect for the output current limiter and the output pin. Output voltage can be set internally by laser trimming technologies. It is selectable in 100mV increments within a range of 1.5V.

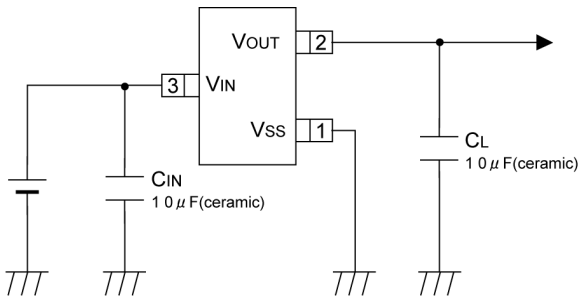

Absolute Maximum Ratings Ta=25℃

PARAMETER		SYMBOL	RATINGS	UNITS
Input Voltage		V_{IN}	7.0	V
Output Current		I_{OUT}	500 *	mA
Output Voltage		V_{OUT}	V_{SS} – 0.3 ~ V_{IN} + 0.3	V
Power Dissipation	SOT-23		250	mW
Operating Temperature Range		Topr	- 40 ~ + 85	°C
Storage Temperature Range		Tstg	- 55 ~ + 125	°C

* I_{OUT}=Pd / (V_{IN}-V_{OUT})

Electrical Characteristics Ta = 25℃

PARAMETER	SYMBOL	CONDITIONS	MIN.	TYP.	MAX.	UNITS	CIRCUIT
Output Voltage (*7)	$V_{OUT(E)}$	I_{OUT}=30mA	x 0.98	$V_{OUT(T)}$ E-1	x 1.02	V	①
Maximum Output Current	I_{OUTMAX}		-	-	E-2	mA	①
Load Regulation	$\triangle V_{OUT}$	$V_{OUT(T)}$>1.8V, 1mA≦I_{OUT}≦100mA $V_{OUT(T)}$≦1.8V, 1mA≦I_{OUT}≦50mA	-	-	E-3	mV	①
Dropout Voltage	Vdif1	I_{OUT}=30mA	-	E-4		mV	①
	Vdif2	$V_{OUT(T)}$>1.8V: I_{OUT}=100mA $V_{OUT(T)}$≦1.8V: I_{OUT}=60mA	-	E-5		mV	
Supply Current	I_{DD}	VCE=VIN	-	1.0	3.0	μA	②
Line Regulation	$\frac{\triangle V_{OUT}}{\triangle V_{IN} \cdot V_{OUT}}$	$V_{OUT(T)}$<4.5V:$V_{OUT(T)}$+1.0V≦V_{IN}≦6.0V $V_{OUT(T)}$≧4.5V:5.5V≦V_{IN}≦6.0V I_{OUT}=30mA	-	0.05	0.25	%/V	①
Input Voltage	V_{IN}		1.8	-	6.0	V	-
Output Voltage Temperature Characteristics	$\frac{\triangle V_{OUT}}{\triangle Topr \cdot V_{OUT}}$	I_{OUT}=30mA -40 °C≦Topr≦85 °C	-	±100	-	ppm/°C	①
Short Circuit Current	Ishort	V_{IN}=V_{OUT}+1.5V, V_{OUT}=V_{SS}	-	E-6	-	mA	①

NOTE:
* 1 : $V_{OUT(T)}$ = Specified output voltage
* 2 : $V_{OUT(E)}$ = Effective output voltage (Ie. The output voltage when "$V_{OUT(T)}$+1.0V" is provided at the V_{IN} pin while maintaining a certain I_{OUT} value.)
* 3 : Vdif = {V_{IN} 1(*5) + V_{OUT} 1(*4) }
* 4 : V_{OUT}1 = A voltage equal to 98% of the output voltage whenever an amply stabilized I_{OUT} {$V_{OUT(T)}$ + 1.0V} is input.
* 5 : V_{IN} 1 = The input voltage when V_{OUT}1 appears as input voltage is gradually decreased.
* 6 : Unless otherwise stated, V_{IN} = $V_{OUT(T)}$ + 1.0V
* 7 : When $V_{OUT(T)}$≧1.5V, accuracy is ±2%.
When $V_{OUT(T)}$<1.5V, accuracy is MIN.:$V_{OUT(T)}$ -30mV / MAX.:$V_{OUT(T)}$ +30mV
+1% accuracy (MIN.: $V_{OUT(T)}$ x 0.99 / MAX.:$V_{OUT(T)}$ x 1.01) is set at $V_{OUT(T)}$≧2.0V

	E-1				E-2	E-3	E-4		E-5		E-6
PARAMETER / SETTING VOLTAGE	OUTPUT VOLTAGE				MAX. OUTPUT CURRENT	LOAD REGULATION	DROPOUT VOLTAGE 1		DROPOUT VOLTAGE 2		SHORT CURRENT
	2% ACCURACY		1% ACCURACY								
$V_{OUT(T)}$	$V_{OUT(E)}$ (V)		$V_{OUT(E)}$ (V)		I_{OUTMAX} (mA)	$\triangle V_{OUT}$	Vdif1		Vdif2		Ishort
	MIN.	MAX.	MIN.	MAX.	MIN.	MAX.	TYP.	MAX.	TYP.	MAX.	TYP.
1.5	1.470	1.530			60	45	300	510	580	860	155

Soldering parameters

Reflow Condition		Pb-Free assembly (see as bellow)
Pre Heat	-Temperature Min ($T_{s(min)}$)	+150℃
	-Temperature Max($T_{s(max)}$)	+200℃
	-Time (Min to Max) (ts)	60-180 secs.
Average ramp up rate (Liquid us Temp (T_L) to peak)		3℃/sec. Max
$T_{s(max)}$ to T_L - Ramp-up Rate		3℃/sec. Max
Reflow	-Temperature(T_L)(Liquid us)	+217℃
	-Temperature(t_L)	60-150 secs.
Peak Temp (T_p)		+260(+0/-5)℃
Time within 5℃ of actual Peak Temp (t_p)		30 secs. Max
Ramp-down Rate		6℃/sec. Max
Time 25℃ to Peak Temp (T_P)		8 min. Max
Do not exceed		+260℃

FIG5: Reflow condition

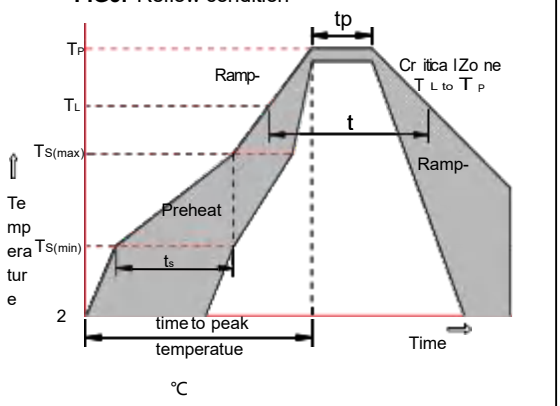

Package Dimensions & Suggested Pad Layout

SOT23

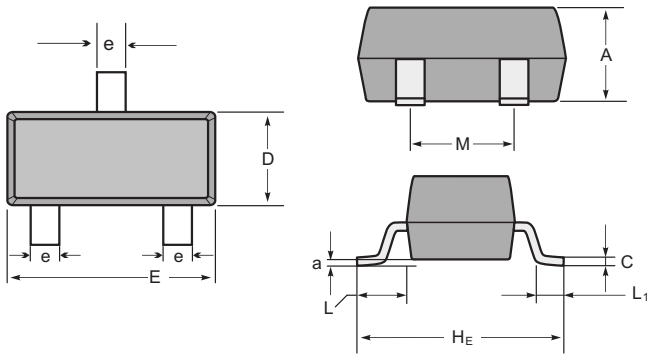

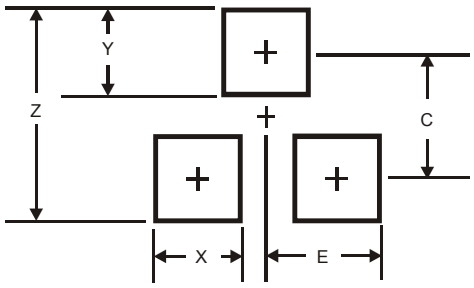

SOT-23 mechanical data

UNIT		A	C	D	E	H_E	e	M	L	L_1	a
mm	max	1.1	0.15	1.4	3.0	2.6	0.5	1.95	0.55 (ref)	0.36 (ref)	0.0
	min	0.9	0.08	1.2	2.8	2.2	0.3	1.7			0.15
mil	max	43	6	55	118	102	20	77	22 (ref)	14 (ref)	0.0
	min	35	3	47	110	87	12	67			6

Dimensions	SOT23
Z	2.9
X	0.8
Y	0.9
C	2.0
E	1.35

Tape & rell specification

Tape

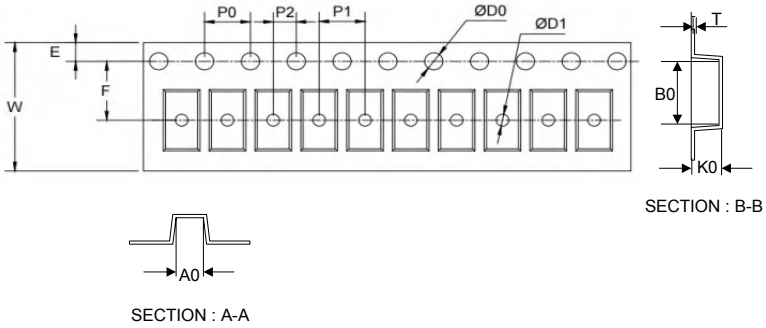

SECTION : B-B

SECTION : A-A

7" Reel

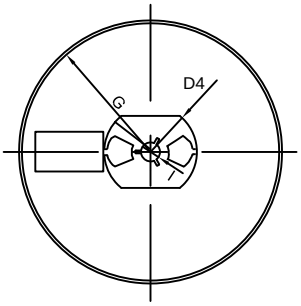

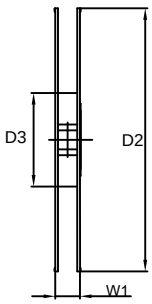

Symbol	Dimension (mm)
P0	4.00±0.10
P1	4.00±0.10
P2	2.00±0.10
D0	1.55±0.10
D1	1.05±0.10
E	1.55±0.10
F	3.60±0.10
W	8.00±0.10
A0	3.80±0.20
B0	3.25±0.20
K0	1.45±0.10
T	0.25±0.05
D2	178.0±3.0
D3	55Min.
D4	R24.0±3.0
G	R82.0±3.0
I	13.0±2.0
W1	11.0±3.0
Quantity: 3000PCS	

ENTEGRECİ

Bu belge www.entegreci.com üzerinden sunulmaktadır.

Elektronik komponent tedarikinde Entegreci

Entegreci, Eskişehir merkezli, Türkiye geneline satış yapan bir elektronik komponent mağazasıdır. Entegreler (IC), mikrodenetleyiciler, transistörler, diyotlar, pasif elemanlar, konnektörler, modüller ve geliştirme kartları tek adetten seri üretim adetlerine kadar satılır. Ürün sayfalarında güncel stok durumunu, fiyatı ve datasheet bağlantısını bulabilirsiniz.

Parça koduyla arama

Üretici parça numarasını yazın; stok ve fiyatı hemen görün.

www.entegreci.com

Ürün kategorileri

Entegreden kapasitöre tüm elektronik komponent kategorileri.

Kategorilere göz atın

Üreticiler

Aradığınız üreticinin ürünlerini tek sayfada inceleyin.

Üreticileri görün

Toplu alım ve teklif

Listede olmayan ya da yüksek adetli parçalar için teklif isteyin.

Teklif isteyin

www.entegreci.com | **destek@entegreci.com** | **0850 305 90 34**

Entegreci is an online electronic components store based in Türkiye. Search by manufacturer part number to see stock, prices and datasheets for integrated circuits, microcontrollers, transistors, passive components and connectors, or request a quote for parts that are not listed.

Bu sayfa Entegreci tarafından eklenmiştir. Belgenin önceki sayfaları asıl yayıncısına aittir ve içeriği değiştirilmemiştir; en güncel sürüm için belgenin yayıncısına başvurun.