LP2951

100 mA Low-Dropout Voltage Regulator

Features

- High Accuracy 5V, Guaranteed 100 mA Output
- Extremely Low Quiescent Current
- Low-Dropout Voltage
- Extremely Tight Load and Line Regulation
- Very Low Temperature Coefficient
- Use as Regulator or Reference
- Needs Only 1 µF for Stability
- Current and Thermal Limiting
- Error Flag Warns of Output Dropout
- Logic-Controlled Electronic Shutdown
- Output Programmable from 1.24V to 29V

Applications

- Automotive Electronics
- Voltage Reference
- Avionics

General Description

The LP2951 is micropower voltage regulators with very low dropout voltage (typically 40 mV at light loads and 380 mV at 100 mA), and very low quiescent current (75 µA typical). The quiescent current of the LP2951 increases only slightly in dropout, thus prolonging battery life. This feature, among others, makes the LP2951 ideally suited for use in battery-powered systems.

Available system functions, such as programmable output voltage and logic-controlled shutdown, are available as well.

Additional features available with the LP2951 also include an error flag output that warns of a low output voltage, which is often due to failing batteries on the input. This may also be used as a power-on reset. A logic-compatible shutdown input is also available which enables the regulator to be switched on and off. This part may also be pin-strapped for a 5V output, or programmed from 1.24V to 29V with the use of two external resistors.

The LP2951 is available as either a -02 or -03 version. The -02 and -03 versions are guaranteed for junction temperatures from -40°C to +125°C; the -02 version has a tighter output and reference voltage specification range over temperature.

The LP2951 have a tight initial tolerance (0.5% typical), a very low output voltage temperature coefficient which allows use as a low-power voltage reference, and extremely good load and line regulation (0.05% typical). This greatly reduces the error in the overall circuit, and is the result of careful design techniques and process control.

Package Types

LP2951
DIP & SOIC
Top View

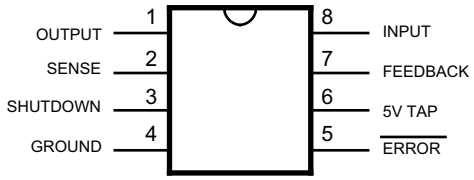

* See MIC2950 for a part with: 1) higher output (150 mA), 2) transient protection (60V), and 3) reverse input protection to –20V.

© 2017 Microchip Technology Inc.

Functional Block Diagram

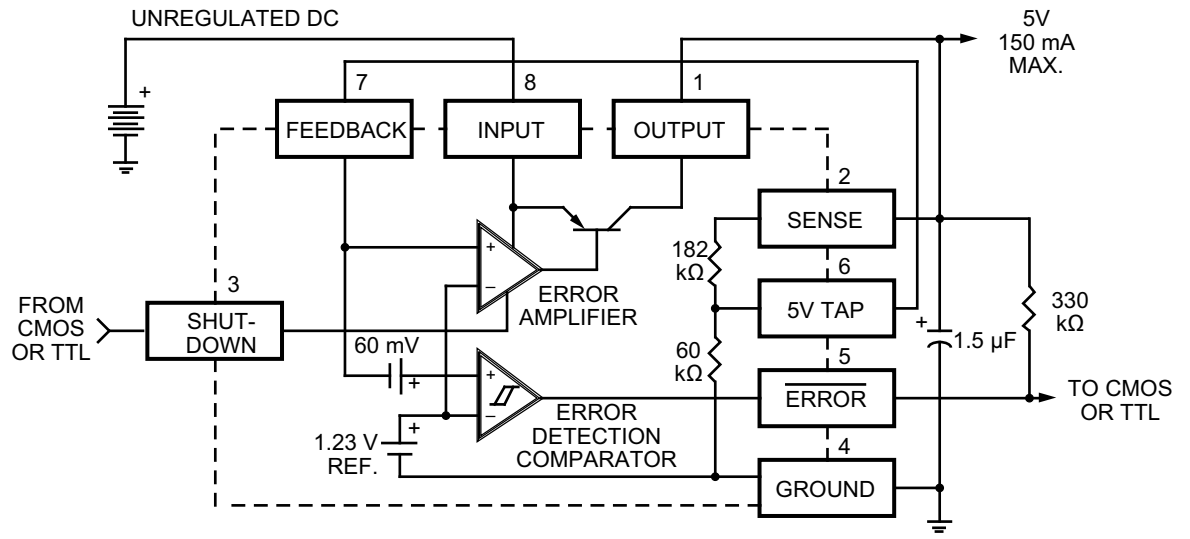

Typical Application Diagrams

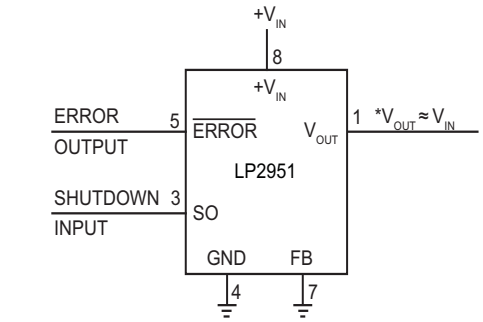

*MINIMUM INPUT-OUTPUT VOLTAGE RANGES FROM 40 mV TO 400 mV, DEPENDING ON LOAD CURRENT. CURRENT LIMIT IS TYPICALLY 160 mA.

WIDE INPUT VOLTAGE RANGE CURRENT LIMITER

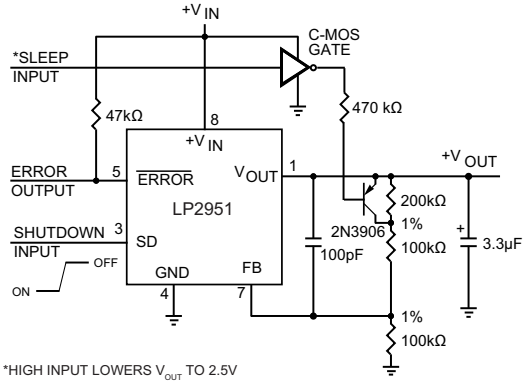

*HIGH INPUT LOWERS V_{OUT} TO 2.5V

5V REGULATOR WITH 2.5V SLEEP FUNCTION

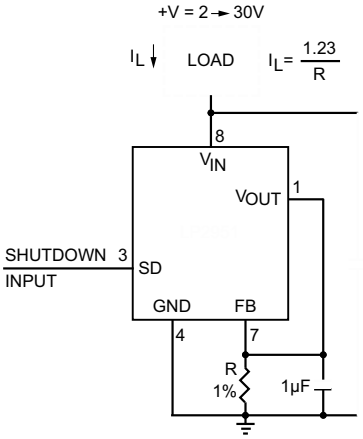

LOW DRIFT CURRENT SOURCE

© 2017 Microchip Technology Inc.

Typical Application Diagrams

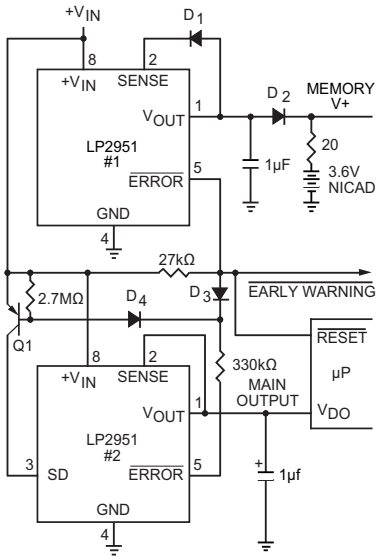

- EARLY WARNING FLAG ON LOW INPUT VOLTAGE
- MAIN OUTPUT LATCHES OFF AT LOWER INPUT VOLTAGES
- BATTERY BACKUP ON AUXILIARY OUTPUT

OPERATION: REG. #1'S V_{OUT} IS PROGRAMMED ONE DIODE DROP ABOVE 5V. ITS ERROR FLAG BECOMES ACTIVE WHEN $V_{IN} \leq 5.7V$. WHEN V_{IN} DROPS BELOW 5.3V, THE ERROR FLAG OF REG. #2 BECOMES ACTIVE AND VIA Q1 LATCHES THE MAIN OUTPUT OFF. WHEN V_{IN} AGAIN EXCEEDS 5.7V REG. #1 IS BACK IN REGULATION AND THE EARLY WARNING SIGNAL RISES, UNLATCHING REG. #2 VIA D3.

REGULATOR WITH EARLY WARNING AND AUXILIARY OUTPUT

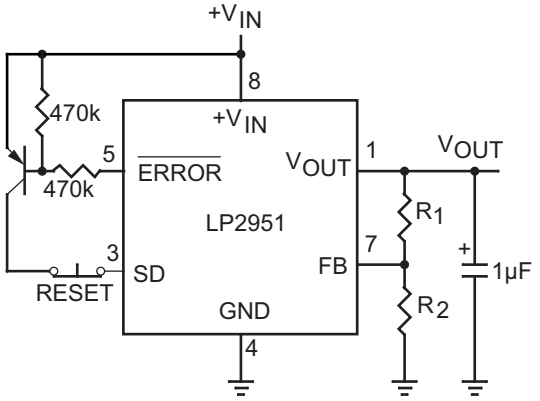

LATCH-OFF WHEN ERROR FLAG OCCURS

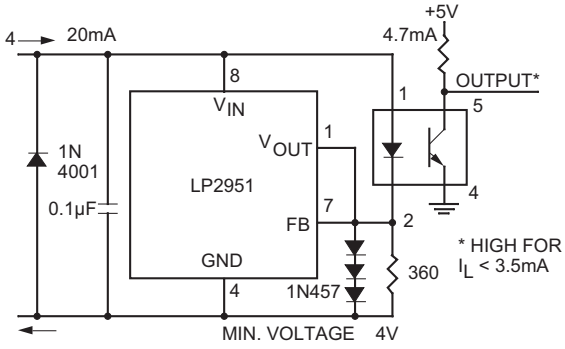

OPEN CIRCUIT DETECTOR FOR 4 mA TO 20 mA CURRENT LOOP

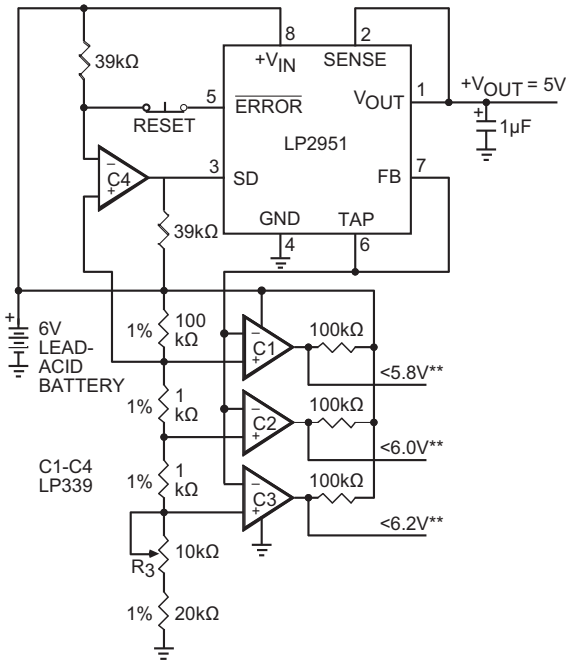

C1 TO C4 ARE COMPARATORS (LP339 OR EQUIVALENT)

*OPTIONAL LATCH OFF WHEN DROP OUT OCCURS. ADJUST R3 FOR C2 SWITCHING WHEN V_{IN} IS 6.0V

**OUTPUTS GO LOW WHEN V_{IN} DROPS BELOW DESIGNATED THRESHOLDS.

REGULATOR WITH STATE-OF-CHARGE INDICATOR

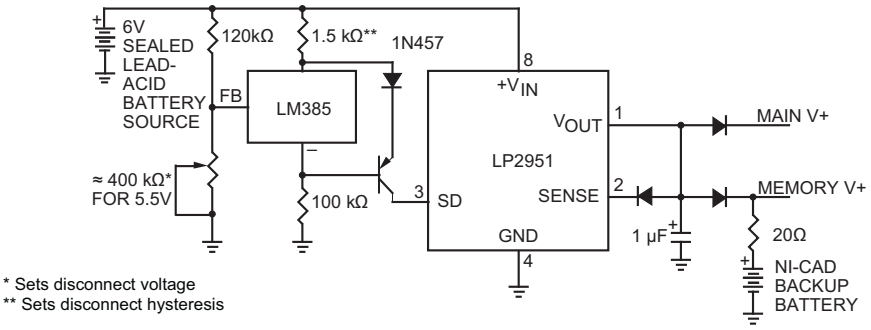

For values shown, Regulator shuts down when V_{IN} < 5.5V and turns on again at 6.0V. Current drain in disconnected mode is 150 µA.

LOW BATTERY DISCONNECT

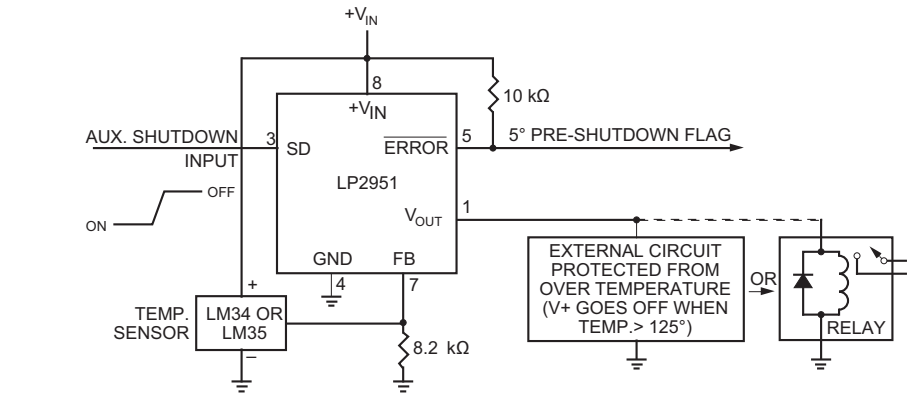

SYSTEM OVER TEMPERATURE PROTECTION CIRCUIT

© 2017 Microchip Technology Inc.

1.0 ELECTRICAL CHARACTERISTICS

Absolute Maximum Ratings † ††

Power Dissipation ..... Internally Limited
Lead Temperature (soldering, 5 sec.) ..... 260°C
Storage Temperature ..... –65°C to +150°C
Operating Junction Temperature Range(Note 1)
LP2951 ..... –40°C to +125°C
Input Supply Voltage ..... –0.3 to +30V
Feedback Input Voltage(Note 2, 3) ..... –1.5 to +30V
Shutdown Input Voltage(Note 2) ..... –0.3 to +30V
Error Comparator Output Voltage(Note 2) ..... –0.3 to +30V

† **Notice:** Boldface limits apply at temperature extremes.

†† **Notice:** If Military/Aerospace specified devices are required, contact your local representative/distributor for availability and specifications.

Note 1: The thermal resistance of the 8-pin DIP package is 105°C/W junction-to-ambient when soldered directly to a PC board. Junction-to-ambient thermal resistance for the SOIC (M) package is 160°C/W.

2: May exceed input supply voltage.

3: When used in dual-supply systems where the output terminal sees loads returned to a negative supply, the output voltage should be diode-clamped to ground.

ELECTRICAL CHARACTERISTICS

Electrical Characteristics: Unless otherwise indicated, T_A = +25°C

Parameters	Sym.	Min.	Typ.	Max.	Units	Conditions
Output Voltage T_J = 25°C		4.975	5.000	5.025	V	LP2951-02 (±0.5%)
		4.950	5.000	5.050	V	LP2951-03 (±1%)
		4.802	4.850	4.899	V	LP2951-4.8 (±1%)

Note 1: Output or reference voltage temperature coefficient is defined as the worst case voltage change divided by the total temperature range.

2: Regulation is measured at constant junction temperature, using pulse testing with a low duty cycle. Changes in output voltage due to heating effects are covered in the specification for thermal regulation.

3: Line regulation for the LP2951 is tested at 150°C for I_L = 1 mA. For I_L = 100 µA and T_J = 125°C, line regulation is guaranteed by design to 0.2%. See Typical Performance Characteristics for line regulation versus temperature and load current.

4: Dropout voltage is defined as the input to output differential at which the output voltage drops 100 mV below its nominal value measured at 1V differential. At very low values of programmed output voltage, the minimum input supply voltage of 2V (2.3V over temperature) must be taken into account.

5: Thermal regulation is defined as the change in output voltage at a time T after a change in power dissipation is applied, excluding load or line regulation effects. Specifications are for a 50 mA load pulse at V_{IN} = 30V (1.25W pulse) for t = 10 ms.

6: Comparator thresholds are expressed in terms of a voltage differential at the Feedback terminal below the nominal reference voltage measured at 6V input. To express these thresholds in terms of output voltage change, multiply by the error amplifier gain = V_{OUT}/V_{REF} =(R1 + R2)/R2. For example, at a programmed output voltage of 5V, the Error output is guaranteed to go low when the output drops by 95 mV x 5V/1.235V = 384 mV. Thresholds remain constant as a percent of V_{OUT} as V_{OUT} is varied, with the dropout warning occurring at typically 5% below nominal, 7.5% guaranteed.

7: $V_{REF} \le V_{OUT} \le (V_{IN} – 1\ V)$, $2.3V \le V_{IN} \le 30V$, $100\ \mu A < I_L \le 100\ mA$, $T_J \le T_{JMAX}$.

8: Output or reference voltage temperature coefficient is defined as the worst case voltage change divided by the total temperature range.

9: $V_{SHUTDOWN} \ge 2V$, $V_{IN} \le 30V$, V_{OUT} = 0, with Feedback pin tied to 5V Tap.

© 2017 Microchip Technology Inc.

ELECTRICAL CHARACTERISTICS (CONTINUED)

Electrical Characteristics: Unless otherwise indicated, T_A = +25°C

Parameters	Sym.	Min.	Typ.	Max.	Units	Conditions
Output Voltage –25°C ≤ T_J ≤ +85°C		4.950	—	5.050	V	LP2951-02 (±0.5%)
		4.925	—	5.075	V	LP2951-03 (±1%)
		4.777	—	4.872	V	LP2951-4.8 (±1%)
Output Voltage Over Full Temperature Range –40°C to +125°C		**4.940**	—	**5.060**	V	LP2951-02 (±0.5%)
		4.900	—	**5.100**	V	LP2951-03 (±1%)
		4.753	—	**4.947**	V	LP2951-4.8 (±1%)
Output Voltage Over Load Variation		**4.930**	—	**5.070**	V	LP2951-02 (±0.5%), 100 µA ≤ I_L ≤ 100 mA, T_J ≤ $T_{J(max)}$
		4.880	—	**5.120**	V	LP2951-03 (±1%), 100 µA ≤ I_L ≤ 100 mA, T_J ≤ $T_{J(max)}$
		4.733	—	**4.967**	V	LP2951-4.8 (±1%), 100 µA ≤ I_L ≤ 100 mA, T_J ≤ $T_{J(max)}$
Output Voltage Temperature Coefficient		—	**20**	**100**	ppm/°C	LP2951-02 (±0.5%), Note 1
		—	**50**	**150**	ppm/°C	LP2951-03 (±1%), Note 1
		—	**50**	**150**	ppm/°C	LP2951-4.8 (±1%), Note 1

Note 1: Output or reference voltage temperature coefficient is defined as the worst case voltage change divided by the total temperature range.

2: Regulation is measured at constant junction temperature, using pulse testing with a low duty cycle. Changes in output voltage due to heating effects are covered in the specification for thermal regulation.

3: Line regulation for the LP2951 is tested at 150°C for I_L = 1 mA. For I_L = 100 µA and T_J = 125°C, line regulation is guaranteed by design to 0.2%. See Typical Performance Characteristics for line regulation versus temperature and load current.

4: Dropout voltage is defined as the input to output differential at which the output voltage drops 100 mV below its nominal value measured at 1V differential. At very low values of programmed output voltage, the minimum input supply voltage of 2V (2.3V over temperature) must be taken into account.

5: Thermal regulation is defined as the change in output voltage at a time T after a change in power dissipation is applied, excluding load or line regulation effects. Specifications are for a 50 mA load pulse at V_{IN} = 30V (1.25W pulse) for t = 10 ms.

6: Comparator thresholds are expressed in terms of a voltage differential at the Feedback terminal below the nominal reference voltage measured at 6V input. To express these thresholds in terms of output voltage change, multiply by the error amplifier gain = V_{OUT}/V_{REF} =(R1 + R2)/R2. For example, at a programmed output voltage of 5V, the Error output is guaranteed to go low when the output drops by 95 mV x 5V/1.235V = 384 mV. Thresholds remain constant as a percent of V_{OUT} as V_{OUT} is varied, with the dropout warning occurring at typically 5% below nominal, 7.5% guaranteed.

7: V_{REF} ≤ V_{OUT} ≤ (V_{IN} – 1 V), 2.3V ≤ V_{IN} ≤ 30V, 100 µA < I_L ≤ 100 mA, T_J ≤ T_{JMAX}.

8: Output or reference voltage temperature coefficient is defined as the worst case voltage change divided by the total temperature range.

9: $V_{SHUTDOWN}$ ≥ 2V, V_{IN} ≤ 30V, V_{OUT} = 0, with Feedback pin tied to 5V Tap.

© 2017 Microchip Technology Inc.

ELECTRICAL CHARACTERISTICS (CONTINUED)

Electrical Characteristics: Unless otherwise indicated, T_A = +25°C

Parameters	Sym.	Min.	Typ.	Max.	Units	Conditions
Line Regulation		—	0.03	0.10	%	LP2951-02 (±0.5%), Note 2, 3
		—	—	**0.20**	%	
		—	0.04	0.20	%	LP2951-03 (±1%), Note 2, 3
		—	—	**0.40**	%	
		—	0.04	0.20	%	LP2951-4.8 (±1%), Note 2, 3
		—	—	**0.40**	%	
Load Regulation		—	0.04	0.10	%	LP2951-02 (±0.5%), Note 2, 100 µA ≤ I_L ≤ 100 mA
		—	—	**0.20**	%	
		—	0.10	0.20	%	LP2951-03 (±1%), Note 2, 100 µA ≤ I_L ≤ 100 mA
		—	—	**0.30**	%	
		—	0.10	0.20	%	LP2951-4.8 (±1%), Note 2, 100 µA ≤ I_L ≤ 100 mA
		—	—	**0.30**	%	
Dropout Voltage		—	50	80	mV	Note 4, I_L = 100 µA
		—	—	150	mV	
		—	380	450	mV	Note 4, I_L = 100 mA
		—	—	600	mV	
Ground Current		—	100	150	µA	I_L = 100 µA
		—	—	200	µA	
		—	8	12	mA	I_L = 100 mA
		—	—	14	mA	

Note 1: Output or reference voltage temperature coefficient is defined as the worst case voltage change divided by the total temperature range.

2: Regulation is measured at constant junction temperature, using pulse testing with a low duty cycle. Changes in output voltage due to heating effects are covered in the specification for thermal regulation.

3: Line regulation for the LP2951 is tested at 150°C for I_L = 1 mA. For I_L = 100 µA and T_J = 125°C, line regulation is guaranteed by design to 0.2%. See Typical Performance Characteristics for line regulation versus temperature and load current.

4: Dropout voltage is defined as the input to output differential at which the output voltage drops 100 mV below its nominal value measured at 1V differential. At very low values of programmed output voltage, the minimum input supply voltage of 2V (2.3V over temperature) must be taken into account.

5: Thermal regulation is defined as the change in output voltage at a time T after a change in power dissipation is applied, excluding load or line regulation effects. Specifications are for a 50 mA load pulse at V_{IN} = 30V (1.25W pulse) for t = 10 ms.

6: Comparator thresholds are expressed in terms of a voltage differential at the Feedback terminal below the nominal reference voltage measured at 6V input. To express these thresholds in terms of output voltage change, multiply by the error amplifier gain = V_{OUT}/V_{REF} =(R1 + R2)/R2. For example, at a programmed output voltage of 5V, the Error output is guaranteed to go low when the output drops by 95 mV x 5V/1.235V = 384 mV. Thresholds remain constant as a percent of V_{OUT} as V_{OUT} is varied, with the dropout warning occurring at typically 5% below nominal, 7.5% guaranteed.

7: $V_{REF} \le V_{OUT} \le (V_{IN} - 1\ V)$, $2.3V \le V_{IN} \le 30V$, 100 µA < I_L ≤ 100 mA, $T_J \le T_{JMAX}$.

8: Output or reference voltage temperature coefficient is defined as the worst case voltage change divided by the total temperature range.

9: $V_{SHUTDOWN} \ge 2V$, $V_{IN} \le 30V$, V_{OUT} = 0, with Feedback pin tied to 5V Tap.

© 2017 Microchip Technology Inc.

ELECTRICAL CHARACTERISTICS (CONTINUED)

Electrical Characteristics: Unless otherwise indicated, T_A = +25°C

Parameters	Sym.	Min.	Typ.	Max.	Units	Conditions
Dropout Current		—	180	250 310	µA µA	V_{IN} = 4.5V, I_L = 100 µA
Current Limit		—	160	220 220	mA mA	V_{OUT} = 0V
Thermal Regulation		—	0.05	0.20	%/W	Note 5
Output Noise		—	430	—	μV_{RMS}	10 Hz to 100 kHz, C_L = 1 µF
		—	160	—	μV_{RMS}	10 Hz to 100 kHz, C_L = 200 µF
		—	100	—	μV_{RMS}	10 Hz to 100 kHz, C_L = 3.3 µF, 0.01 µF bypass Feedback to Output
Reference Voltage		1.220	1.235	1.25	V	LP2951-02 (±0.5%)
		1.200	—	**1.260**	V	
		1.210	1.235	1.260	V	LP2951-03 (±1%)
		1.200	—	**1.270**	V	
		1.210	1.235	1.260	V	LP2951-4.8 (±1%)
		1.200	—	1.270	V	
Reference Voltage		1.190	—	1.270	V	LP2951-02 (±0.5%), Note 7
		1.185	—	1.285	V	LP2951-03 (±1%), Note 7
		1.185	—	1.285	V	LP2951-4.8 (±1%), Note 7

Note 1: Output or reference voltage temperature coefficient is defined as the worst case voltage change divided by the total temperature range.

2: Regulation is measured at constant junction temperature, using pulse testing with a low duty cycle. Changes in output voltage due to heating effects are covered in the specification for thermal regulation.

3: Line regulation for the LP2951 is tested at 150°C for I_L = 1 mA. For I_L = 100 µA and T_J = 125°C, line regulation is guaranteed by design to 0.2%. See Typical Performance Characteristics for line regulation versus temperature and load current.

4: Dropout voltage is defined as the input to output differential at which the output voltage drops 100 mV below its nominal value measured at 1V differential. At very low values of programmed output voltage, the minimum input supply voltage of 2V (2.3V over temperature) must be taken into account.

5: Thermal regulation is defined as the change in output voltage at a time T after a change in power dissipation is applied, excluding load or line regulation effects. Specifications are for a 50 mA load pulse at V_{IN} = 30V (1.25W pulse) for t = 10 ms.

6: Comparator thresholds are expressed in terms of a voltage differential at the Feedback terminal below the nominal reference voltage measured at 6V input. To express these thresholds in terms of output voltage change, multiply by the error amplifier gain = V_{OUT}/V_{REF} =(R1 + R2)/R2. For example, at a programmed output voltage of 5V, the Error output is guaranteed to go low when the output drops by 95 mV x 5V/1.235V = 384 mV. Thresholds remain constant as a percent of V_{OUT} as V_{OUT} is varied, with the dropout warning occurring at typically 5% below nominal, 7.5% guaranteed.

7: $V_{REF} \le V_{OUT} \le (V_{IN} - 1\ V)$, $2.3V \le V_{IN} \le 30V$, $100\ \mu A < I_L \le 100\ mA$, $T_J \le T_{JMAX}$.

8: Output or reference voltage temperature coefficient is defined as the worst case voltage change divided by the total temperature range.

9: $V_{SHUTDOWN} \ge 2V$, $V_{IN} \le 30V$, V_{OUT} = 0, with Feedback pin tied to 5V Tap.

© 2017 Microchip Technology Inc.

ELECTRICAL CHARACTERISTICS (CONTINUED)

Electrical Characteristics: Unless otherwise indicated, T_A = +25°C						
Parameters	**Sym.**	**Min.**	**Typ.**	**Max.**	**Units**	**Conditions**
Feedback Bias Current		—	20	40	nA	—
		—	—	60		
Reference Voltage		—	20	—	ppm/°C	LP2951-02 (±0.5%), Note 8
		—	50	—	ppm/°C	LP2951-03 (±1%), Note 8
		—	50	—	ppm/°C	LP2951-4.8 (±1%), Note 8
Feedback Bias Current Temperature Coefficient		—	0.1	—	nA/°C	
Output Leakage Current		—	0.01	1.00	µA	V_{OH} = 30V
		—	—	**2.00**	µA	
Output Low Voltage (Flag)		—	150	250	mV	V_{IN} = 4.5V, I_{OL} = 200µA
		—	—	400	mV	
Upper Threshold Voltage		40	60	—	mV	Note 6
		25		—	mV	
Lower Threshold Voltage		—	75	95	mV	Note 6
		—	—	140	mV	
Hysteresis		—	15	—	mV	Note 6

Note 1: Output or reference voltage temperature coefficient is defined as the worst case voltage change divided by the total temperature range.

2: Regulation is measured at constant junction temperature, using pulse testing with a low duty cycle. Changes in output voltage due to heating effects are covered in the specification for thermal regulation.

3: Line regulation for the LP2951 is tested at 150°C for I_L = 1 mA. For I_L = 100 µA and T_J = 125°C, line regulation is guaranteed by design to 0.2%. See Typical Performance Characteristics for line regulation versus temperature and load current.

4: Dropout voltage is defined as the input to output differential at which the output voltage drops 100 mV below its nominal value measured at 1V differential. At very low values of programmed output voltage, the minimum input supply voltage of 2V (2.3V over temperature) must be taken into account.

5: Thermal regulation is defined as the change in output voltage at a time T after a change in power dissipation is applied, excluding load or line regulation effects. Specifications are for a 50 mA load pulse at V_{IN} = 30V (1.25W pulse) for t = 10 ms.

6: Comparator thresholds are expressed in terms of a voltage differential at the Feedback terminal below the nominal reference voltage measured at 6V input. To express these thresholds in terms of output voltage change, multiply by the error amplifier gain = V_{OUT}/V_{REF} =(R1 + R2)/R2. For example, at a programmed output voltage of 5V, the Error output is guaranteed to go low when the output drops by 95 mV x 5V/1.235V = 384 mV. Thresholds remain constant as a percent of V_{OUT} as V_{OUT} is varied, with the dropout warning occurring at typically 5% below nominal, 7.5% guaranteed.

7: $V_{REF} \le V_{OUT} \le (V_{IN} - 1\ V)$, $2.3V \le V_{IN} \le 30V$, $100\ \mu A < I_L \le 100\ mA$, $T_J \le T_{JMAX}$.

8: Output or reference voltage temperature coefficient is defined as the worst case voltage change divided by the total temperature range.

9: $V_{SHUTDOWN} \ge 2V$, $V_{IN} \le 30V$, V_{OUT} = 0, with Feedback pin tied to 5V Tap.

© 2017 Microchip Technology Inc.

ELECTRICAL CHARACTERISTICS (CONTINUED)

Electrical Characteristics: Unless otherwise indicated, T_A = +25°C						
Parameters	**Sym.**	**Min.**	**Typ.**	**Max.**	**Units**	**Conditions**
Input Logic Voltage		—	1.3	—	V	LP2951-02 (±0.5%)
		—	—	0.7	V	Low
		2.0	—	—	V	High
		—	1.3	—	V	LP2951-03 (±1%)
		—	—	0.7	V	Low
		2.0	—	—	V	High
		—	1.3	—	V	LP2951-4.8 (±1%)
		—	—	0.7	V	Low
		2.0	—	—	V	High

Note 1: Output or reference voltage temperature coefficient is defined as the worst case voltage change divided by the total temperature range.

2: Regulation is measured at constant junction temperature, using pulse testing with a low duty cycle. Changes in output voltage due to heating effects are covered in the specification for thermal regulation.

3: Line regulation for the LP2951 is tested at 150°C for I_L = 1 mA. For I_L = 100 µA and T_J = 125°C, line regulation is guaranteed by design to 0.2%. See Typical Performance Characteristics for line regulation versus temperature and load current.

4: Dropout voltage is defined as the input to output differential at which the output voltage drops 100 mV below its nominal value measured at 1V differential. At very low values of programmed output voltage, the minimum input supply voltage of 2V (2.3V over temperature) must be taken into account.

5: Thermal regulation is defined as the change in output voltage at a time T after a change in power dissipation is applied, excluding load or line regulation effects. Specifications are for a 50 mA load pulse at V_{IN} = 30V (1.25W pulse) for t = 10 ms.

6: Comparator thresholds are expressed in terms of a voltage differential at the Feedback terminal below the nominal reference voltage measured at 6V input. To express these thresholds in terms of output voltage change, multiply by the error amplifier gain = V_{OUT}/V_{REF} =(R1 + R2)/R2. For example, at a programmed output voltage of 5V, the Error output is guaranteed to go low when the output drops by 95 mV x 5V/1.235V = 384 mV. Thresholds remain constant as a percent of V_{OUT} as V_{OUT} is varied, with the dropout warning occurring at typically 5% below nominal, 7.5% guaranteed.

7: $V_{REF} \le V_{OUT} \le (V_{IN} - 1\ V)$, $2.3V \le V_{IN} \le 30V$, $100\ \mu A < I_L \le 100\ mA$, $T_J \le T_{JMAX}$.

8: Output or reference voltage temperature coefficient is defined as the worst case voltage change divided by the total temperature range.

9: $V_{SHUTDOWN} \ge 2V$, $V_{IN} \le 30V$, V_{OUT} = 0, with Feedback pin tied to 5V Tap.

© 2017 Microchip Technology Inc.

ELECTRICAL CHARACTERISTICS (CONTINUED)

Electrical Characteristics: Unless otherwise indicated, T_A = +25°C						
Parameters	**Sym.**	**Min.**	**Typ.**	**Max.**	**Units**	**Conditions**
Shutdown Input Current		—	30	50	µA	$V_{SHUTDOWN}$ = 2.4V
		—	—	100	µA	
		—	450	600	µA	$V_{SHUTDOWN}$ = 30V
		—	—	700	µA	
Regulator Output Current in Shutdown		—	3	10	µA	Note 9
		—	—	20	µA	

Note 1: Output or reference voltage temperature coefficient is defined as the worst case voltage change divided by the total temperature range.

2: Regulation is measured at constant junction temperature, using pulse testing with a low duty cycle. Changes in output voltage due to heating effects are covered in the specification for thermal regulation.

3: Line regulation for the LP2951 is tested at 150°C for I_L = 1 mA. For I_L = 100 µA and T_J = 125°C, line regulation is guaranteed by design to 0.2%. See Typical Performance Characteristics for line regulation versus temperature and load current.

4: Dropout voltage is defined as the input to output differential at which the output voltage drops 100 mV below its nominal value measured at 1V differential. At very low values of programmed output voltage, the minimum input supply voltage of 2V (2.3V over temperature) must be taken into account.

5: Thermal regulation is defined as the change in output voltage at a time T after a change in power dissipation is applied, excluding load or line regulation effects. Specifications are for a 50 mA load pulse at V_{IN} = 30V (1.25W pulse) for t = 10 ms.

6: Comparator thresholds are expressed in terms of a voltage differential at the Feedback terminal below the nominal reference voltage measured at 6V input. To express these thresholds in terms of output voltage change, multiply by the error amplifier gain = V_{OUT}/V_{REF} =(R1 + R2)/R2. For example, at a programmed output voltage of 5V, the Error output is guaranteed to go low when the output drops by 95 mV x 5V/1.235V = 384 mV. Thresholds remain constant as a percent of V_{OUT} as V_{OUT} is varied, with the dropout warning occurring at typically 5% below nominal, 7.5% guaranteed.

7: $V_{REF} \le V_{OUT} \le (V_{IN} - 1\ V)$, $2.3V \le V_{IN} \le 30V$, $100\ \mu A < I_L \le 100\ mA$, $T_J \le T_{JMAX}$.

8: Output or reference voltage temperature coefficient is defined as the worst case voltage change divided by the total temperature range.

9: $V_{SHUTDOWN} \ge 2V$, $V_{IN} \le 30V$, V_{OUT} = 0, with Feedback pin tied to 5V Tap.

© 2017 Microchip Technology Inc.

TEMPERATURE SPECIFICATIONS (Note 1)

Parameters	Sym.	Min.	Typ.	Max.	Units	Conditions
Temperature Ranges						
Lead Temperature Range	—	—	260	—	°C	
Junction Operating Temperature	T_J	–40	—	+125	°C	
Storage Temperature Range	T_A	–65	—	+125	°C	
Package Thermal Resistances						
Thermal Resistance, DIP Package	θ_{JA}	—	105	—	°C/W	Soldered directly to a PC board
	θ_{JC}	—	40	—	°C/W	
Thermal Resistance, SOIC Package	θ_{JA}	—	160	—	°C/W	Typically mounting on a 1" square copper-clad FR4 circuit board
	θ_{JC}	—	25	—	°C/W	

Note 1: The maximum allowable power dissipation is a function of ambient temperature, the maximum allowable junction temperature and the thermal resistance from junction to air (i.e., T_A, T_J, θ_{JA}). Exceeding the maximum allowable power dissipation will cause the device operating junction temperature to exceed the maximum +125°C rating. Sustained junction temperatures above +125°C can impact the device reliability.

© 2017 Microchip Technology Inc.

2.0 TYPICAL PERFORMANCE CURVES

Note: The graphs and tables provided following this note are a statistical summary based on a limited number of samples and are provided for informational purposes only. The performance characteristics listed herein are not tested or guaranteed. In some graphs or tables, the data presented may be outside the specified operating range (e.g., outside specified power supply range) and therefore outside the warranted range.

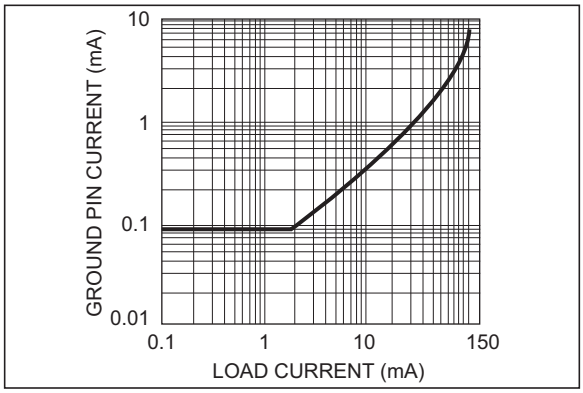

FIGURE 2-1: *Quiescent Current.*

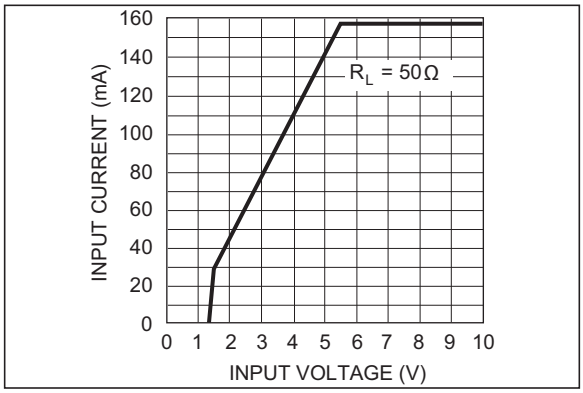

FIGURE 2-4: *Input Current.*

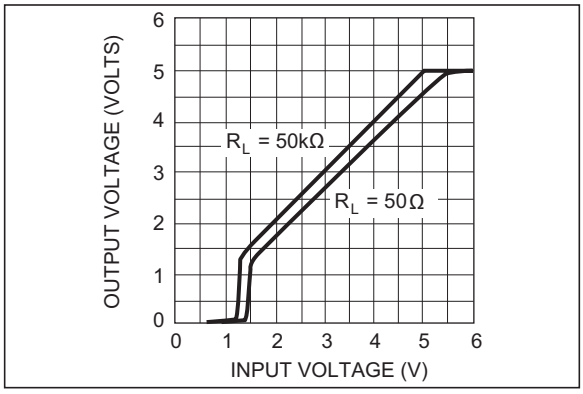

FIGURE 2-2: *Dropout Characteristics.*

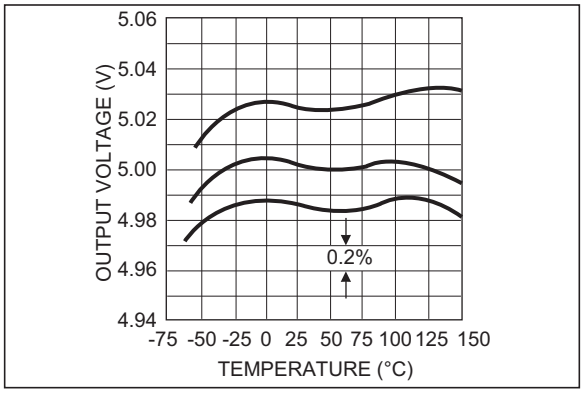

FIGURE 2-5: *Output Voltage vs. Temperature of 3 Representative Units.*

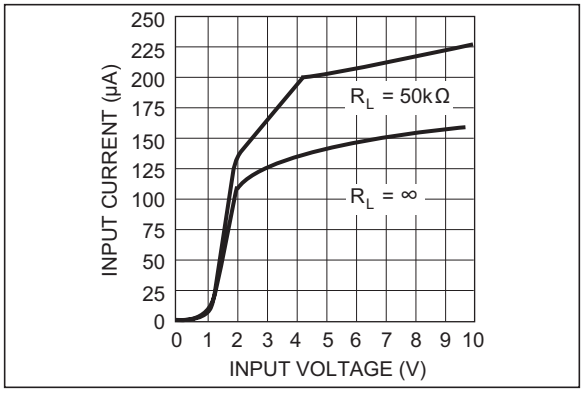

FIGURE 2-3: *Input Current.*

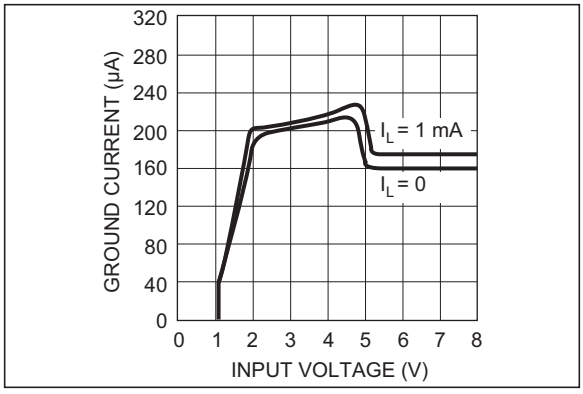

FIGURE 2-6: *Ground Current.*

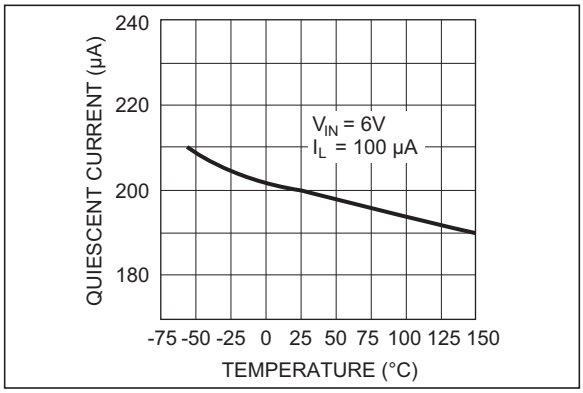

FIGURE 2-7: *Quiescent Current.*

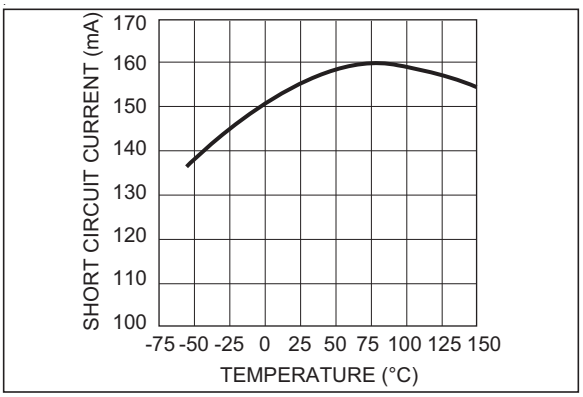

FIGURE 2-10: *Short Circuit Current.*

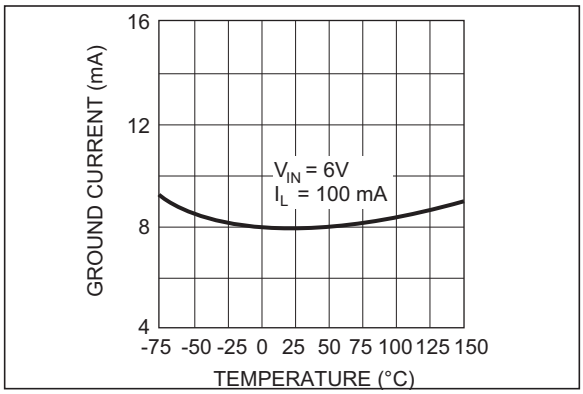

FIGURE 2-8: *Ground Current.*

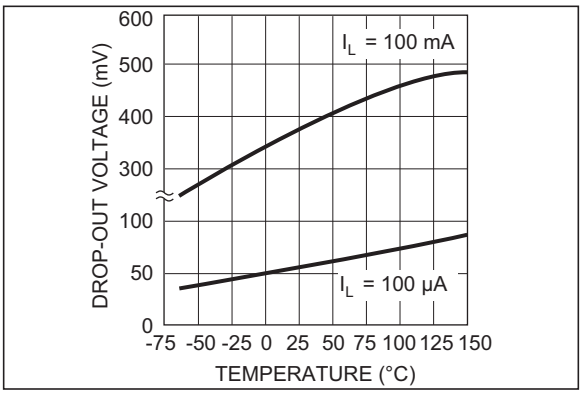

FIGURE 2-11: *Dropout Voltage.*

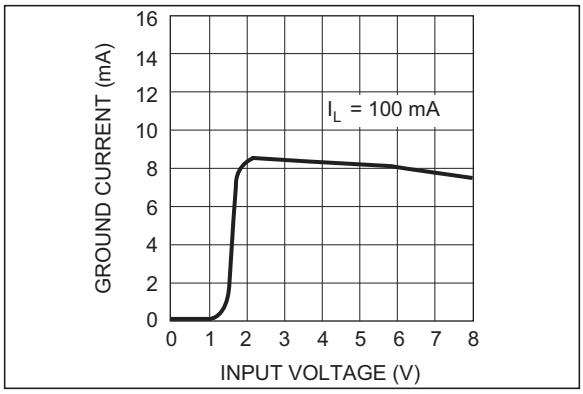

FIGURE 2-9: *Ground Current.*

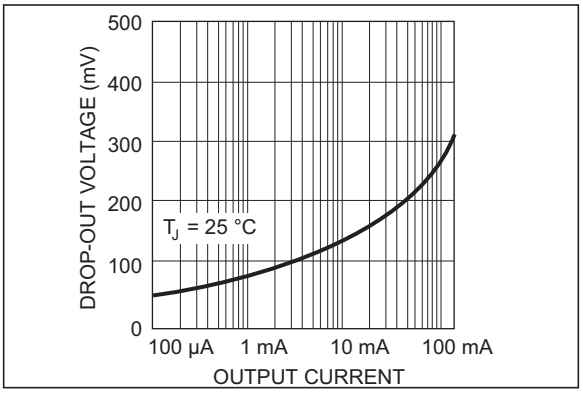

FIGURE 2-12: *Dropout Voltage.*

© 2017 Microchip Technology Inc.

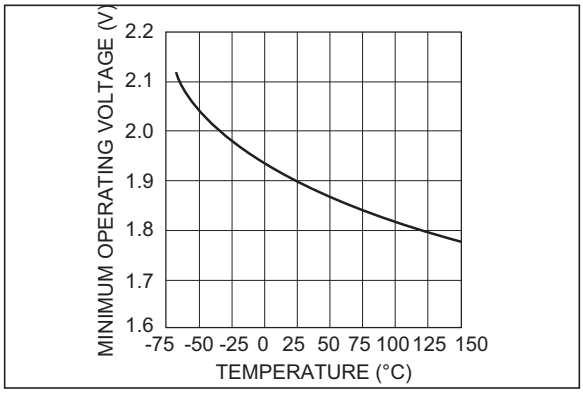

FIGURE 2-13: *Minimum Operating Voltage.*

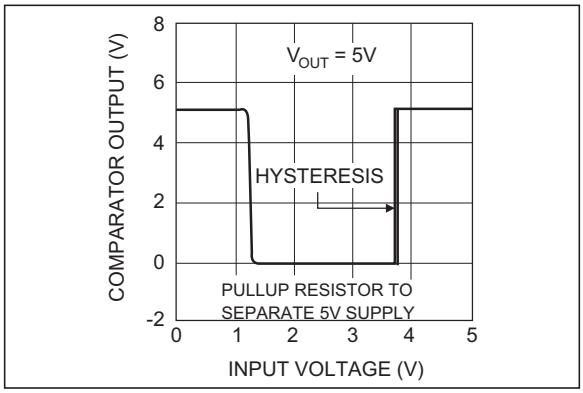

FIGURE 2-16: *Error Comparator Output.*

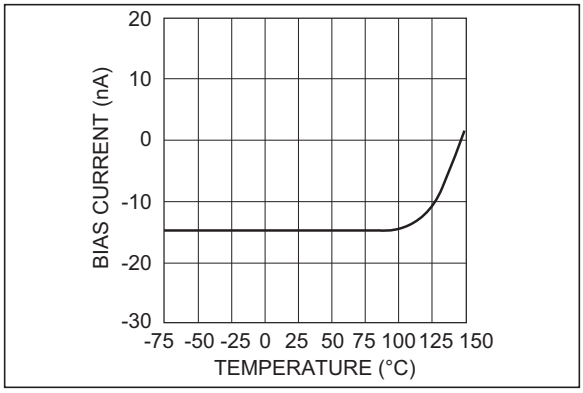

FIGURE 2-14: *Feedback Bias Current.*

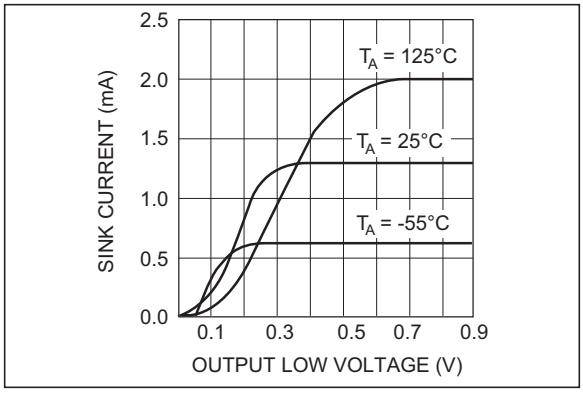

FIGURE 2-17: *Comparator Sink Current.*

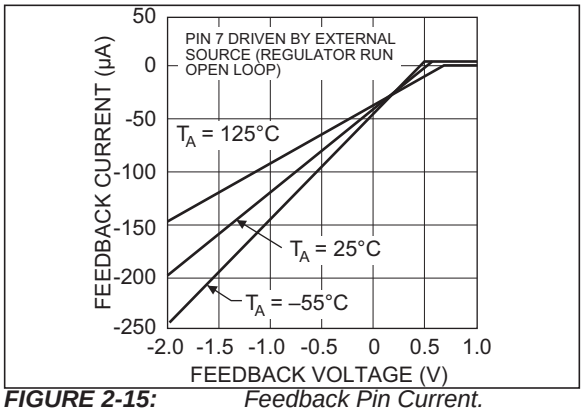

FIGURE 2-15: *Feedback Pin Current.*

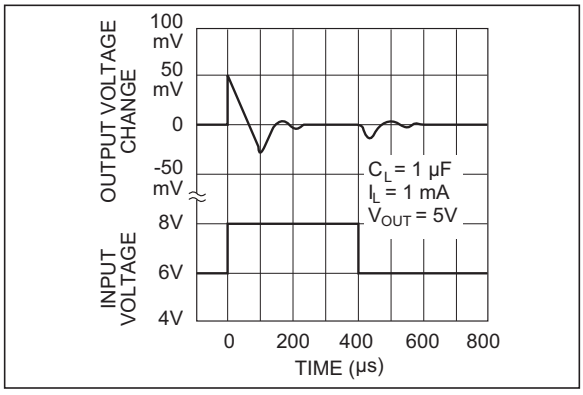

FIGURE 2-18: *Line Transient Response*.

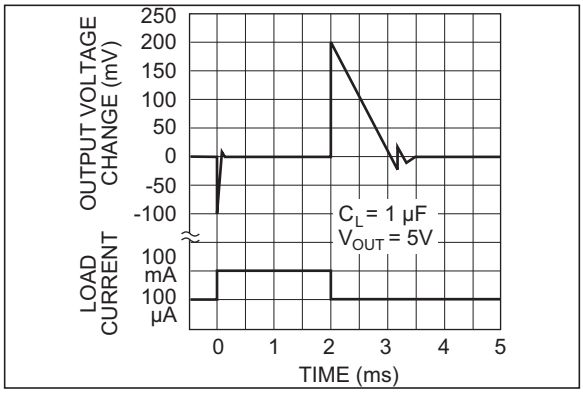

FIGURE 2-19: *Load Transient Response.*

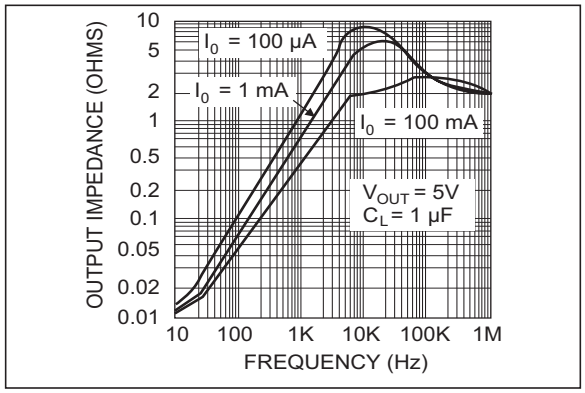

FIGURE 2-22: *Output Impedance.*

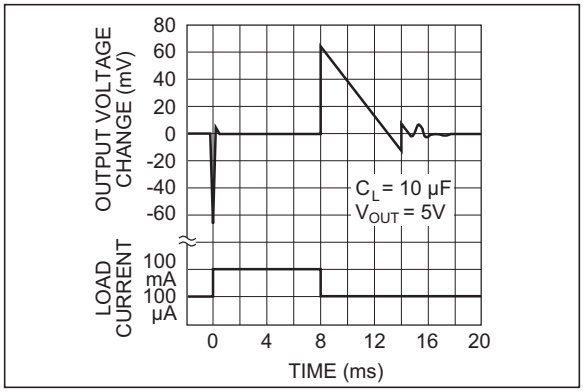

FIGURE 2-20: *Load Transient Response.*

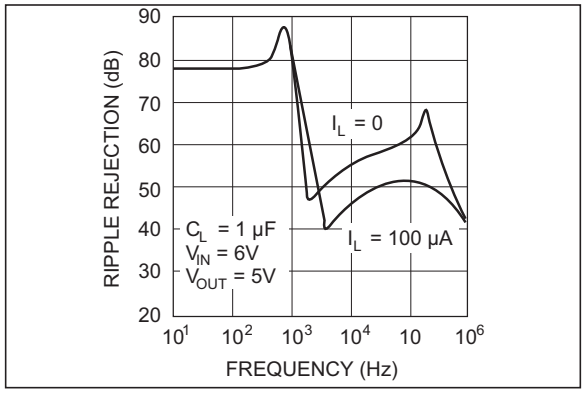

FIGURE 2-23: *Ripple Rejection.*

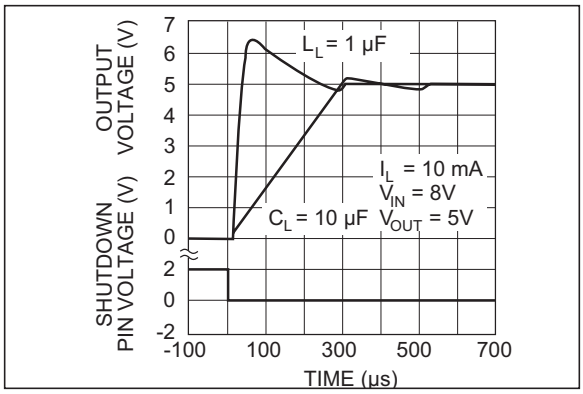

FIGURE 2-21: *Enable Transient.*

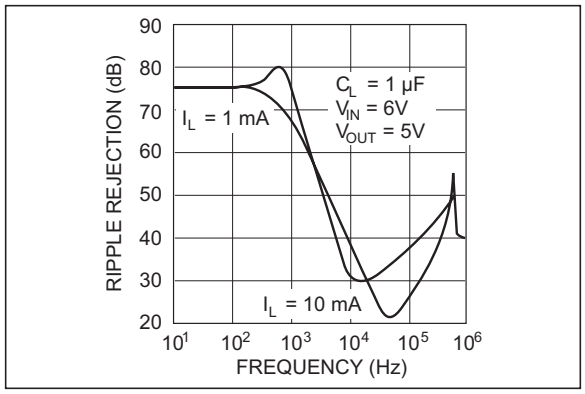

FIGURE 2-24: *Ripple Rejection.*

© 2017 Microchip Technology Inc.

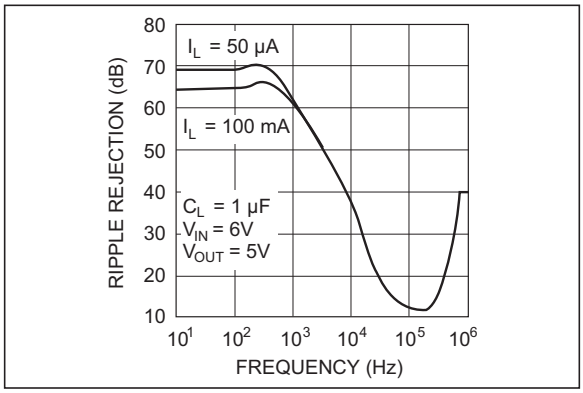

FIGURE 2-25: *Ripple Rejection.*

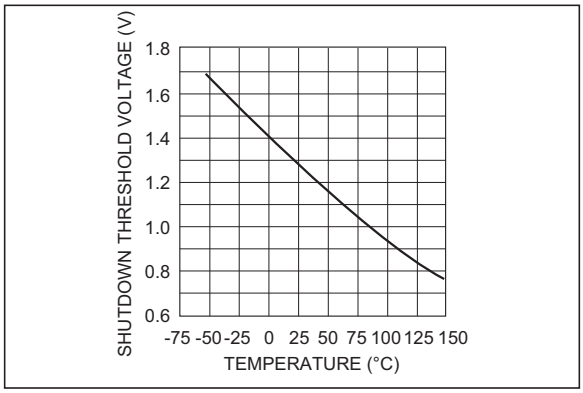

FIGURE 2-28: *Shutdown Threshold Voltage.*

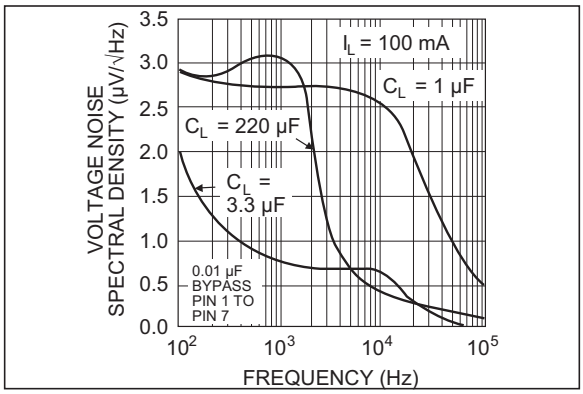

FIGURE 2-26: *Output Noise.*

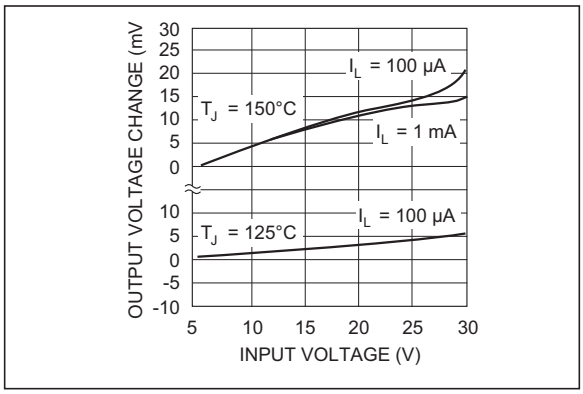

FIGURE 2-29: *Line Regulation.*

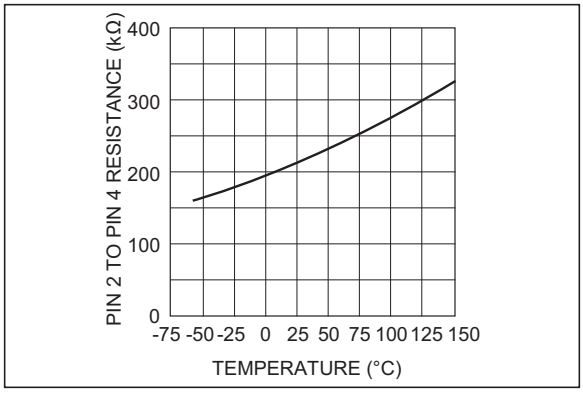

FIGURE 2-27: *Divider Resistance.*

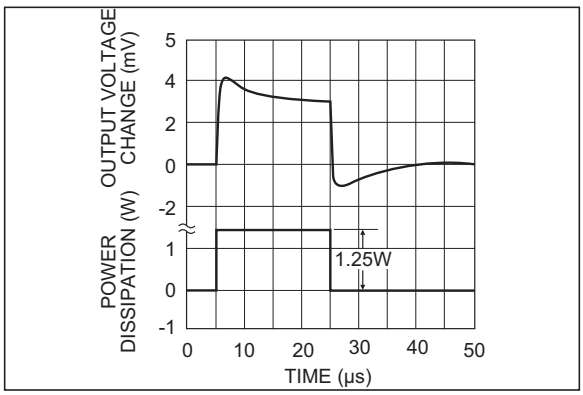

FIGURE 2-30: *Thermal Response.*

3.0 PIN DESCRIPTIONS

The descriptions of the pins are listed in Table 3-1.

TABLE 3-1: DIP AND SOIC PIN FUNCTION TABLE

LP2951	Symbol	Description
1	V_{OUT}	Regulated voltage output.
2	SENSE	Output Voltage Sense.
3	SHDN	Shutdown Input.
4	GND	Ground Terminal.
5	ERROR	Error Output.
6	5V TAP	Internal Resistor Divider for 5V Output.
7	FB	Voltage Feedback Input.
8	V_{IN}	Unregulated Supply Voltage.

© 2017 Microchip Technology Inc.

4.0 APPLICATION INFORMATION

4.1 External Capacitors

A 1.0 µF (or greater) capacitor is required between the LP2951 output and ground to prevent oscillations due to instability. Most types of tantalum or aluminum electrolytics will be adequate; film types will work, but are costly and therefore not recommended. Many aluminum electrolytics have electrolytes that freeze at about –30°C, so solid tantalum capacitors are recommended for operation below –25°C. The important parameters of the capacitor are an effective series resistance of about 5Ω or less and a resonant frequency above 500 kHz. The value of this capacitor may be increased without limit.

At lower values of output current, less output capacitance is required for output stability. The capacitor can be reduced to 0.33 µF for current below 10 mA or 0.1 µF for currents below 1 mA. Using the 8-pin versions at voltages below 5V runs the error amplifier at lower gains so that more output capacitance is needed. For the worst-case situation of a 100 mA load at 1.23V output (Output shorted to Feedback) a 3.3 µF (or greater) capacitor should be used.

When the 5V Tap pin and Feedback pin are connected together for 5V output voltage, the LP2951 will remain stable and in regulation with no load in addition to the internal voltage divider, unlike many other voltage regulators. This is especially important in CMOS RAM keep-alive applications. When setting the output voltage of the LP2951 with external resistors, a minimum load of 1 µA is recommended.

A 0.1 µF capacitor should be placed from the LP2951 input to ground if there is more than 10 inches of wire between the input and the AC filter capacitor or if a battery is used as the input.

Stray capacitance to the LP2951 Feedback terminal (pin 7) can cause instability. This may especially be a problem when using high value external resistors to set the output voltage. Adding a 100 pF capacitor between Output and Feedback and increasing the output capacitor to at least 3.3 µF will remedy this.

4.2 Error Detection Comparator Output

A logic low output will be produced by the comparator whenever the LP2951 output falls out of regulation by more than approximately 5%. This figure is the comparator's built-in offset of about 60mV divided by the 1.235V reference voltage. (Refer to the block diagram on Page 1). This trip level remains "5% below normal" regardless of the programmed output voltage of the LP2951. For example, the error flag trip level is typically 4.75V for a 5V output or 11.4V for a 12V output. The out of regulation condition may be due either to low input voltage, current limiting, or thermal limiting.

Figure 4-1 is a timing diagram depicting the ERROR signal and the regulated output voltage as the LP2951 input is ramped up and down. The ERROR signal becomes valid (low) at about 1.3V input. It goes high at about 5V input (the input voltage at which V_{OUT} = 4.75V). Since the LP2951's dropout voltage is load-dependent (see curve in Typical Performance Curves), the input voltage trip point (about 5V) will vary with the load current. The output voltage trip point (approximately 4.75V) does not vary with load.

The error comparator has an open-collector output which requires an external pull-up resistor. Depending on system requirements, this resistor may be returned to the 5V output or some other supply voltage. In determining a value for this resistor, note that while the output is rated to sink 400 µA, this sink current adds to battery drain in a low battery condition. Suggested values range from 100 kΩ to 1 MΩ. The resistor is not required if this output is unused.

4.3 Programming the Output Voltage

The LP2951 may be pin-strapped for 5V output voltage using its internal voltage divider, by tying Pin 1 (V_{OUT}) and Pin 2 (SENSE) together, as well as tying Pin 7 (Feedback) and Pin 6 (5V TAP) together. Alternatively, it may be programmed for any output voltage between its 1.235V reference and its 30V maximum rating. An external pair of resistors is required, as shown in Figure 4-2.

The complete equation for the output voltage is:

EQUATION 4-1:

$$V_{OUT} = V_{REF} \times \left\{1 + \frac{R_1}{R_2}\right\} + I_{FB}R_2$$

Where:

V_{REF} = the nominal 1.235 reference voltage

I_{FB} = the feedback pin bias current, nominally 20 nA

The minimum recommended load current of 1 µA forces an upper limit of 1.2 MΩ on the value of R2, if the regulator must work with no load (a condition often found in CMOS in standby), I_{FB} will produce a 2% typical error in V_{OUT} which may be eliminated at room temperature by trimming R1. For better accuracy, choosing R2 = 100 kΩ reduces this error to 0.17% while increasing the resistor program current to 12 µA. Since the LP2951 typically draws 60 µA at no load with Pin 2 open-circuited, this is a small price to pay.

© 2017 Microchip Technology Inc.

4.4 Reducing Output Noise

In reference applications it may be advantageous to reduce the AC noise present at the output. One method is to reduce the regulator bandwidth by increasing the size of the output capacitor. This method is relatively inefficient, as increasing the capacitor from 1µF to 220 µF only decreases the noise from 430 µV to 160 μV_{rms} for a 100 kHz bandwidth at 5V output.

Noise can be reduced fourfold by a bypass capacitor across R1, since it reduces the high frequency gain from 4 to unity. Pick the resulting frequency from Equation 4-2:

EQUATION 4-2:

$$C_{BYPASS} = \frac{1}{2\pi R_1 \bullet 200Hz}$$

or about 0.01 µF. When doing this, the output capacitor must be increased to 3.3 µF to maintain stability. These changes reduce the output noise from 430 µV to 100 μV_{rms} for a100 kHz bandwidth at 5V output. With the bypass capacitor added, noise no longer scales with output voltage so that improvements are more dramatic at higher output voltages.

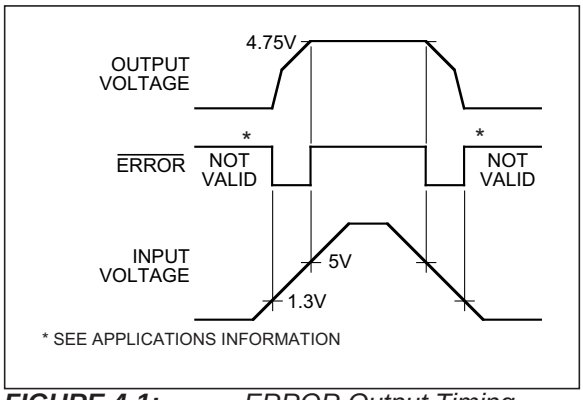

FIGURE 4-1: *ERROR Output Timing.*

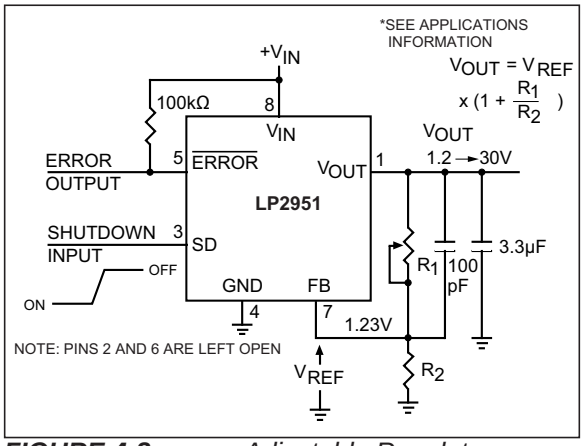

FIGURE 4-2: *Adjustable Regulator.*

© 2017 Microchip Technology Inc.

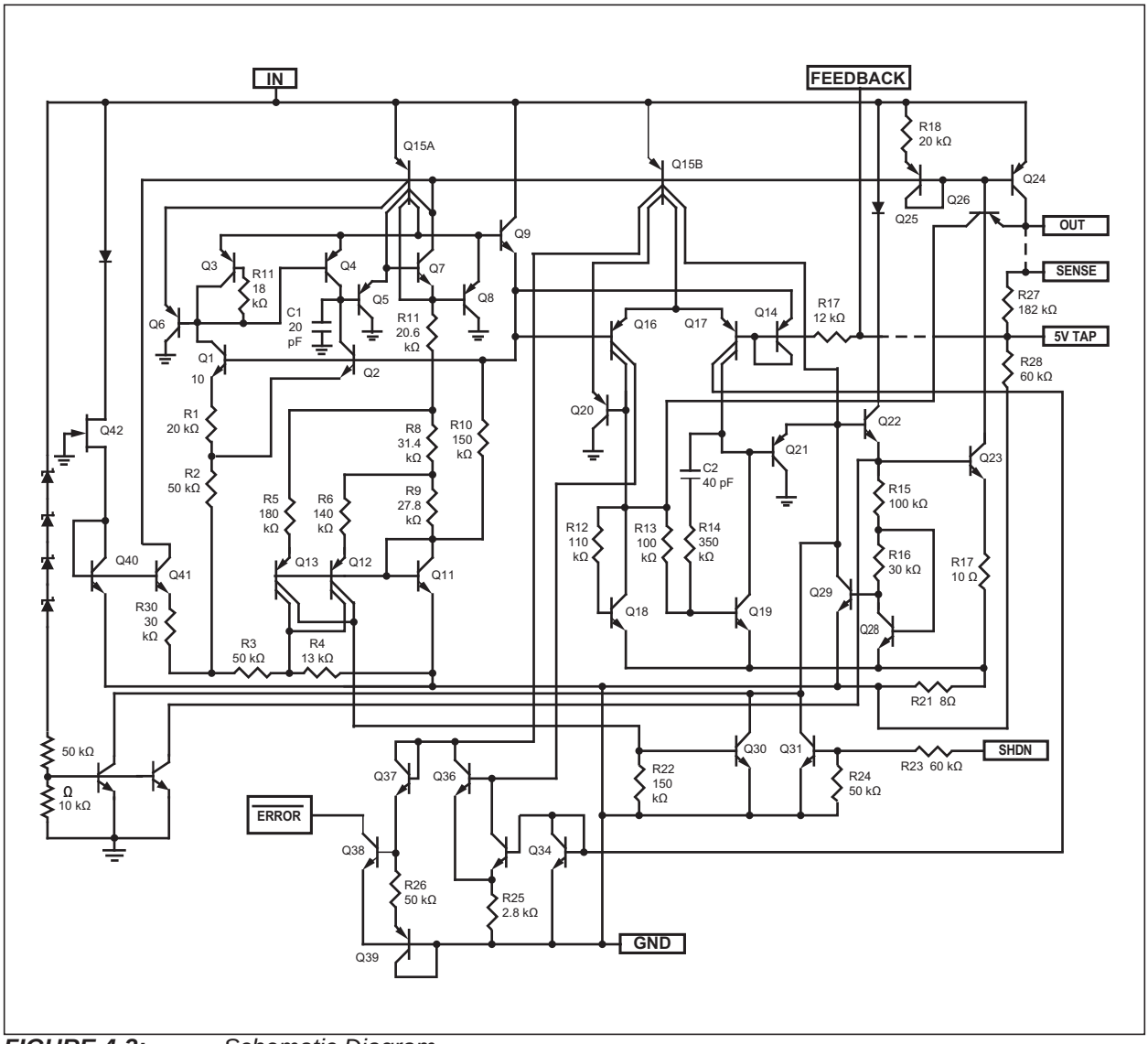

FIGURE 4-3: *Schematic Diagram.*

5.0 PACKAGING INFORMATION

5.1 Package Marking Information

8-Pin SOIC*

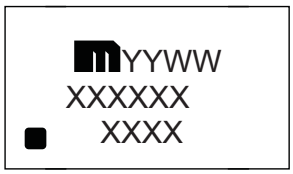

Example

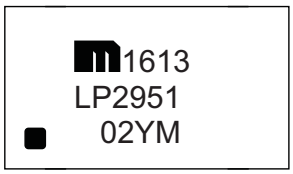

8-Pin Plastic DIP*

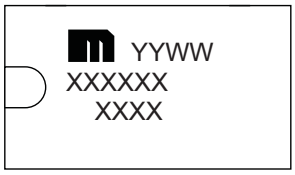

Example

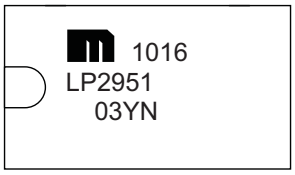

Legend:	XX...X	Product code or customer-specific information
	Y	Year code (last digit of calendar year)
	YY	Year code (last 2 digits of calendar year)
	WW	Week code (week of January 1 is week ‘01’)
	NNN	Alphanumeric traceability code
	(e3)	Pb-free JEDEC® designator for Matte Tin (Sn)
	*	This package is Pb-free. The Pb-free JEDEC designator ((e3)) can be found on the outer packaging for this package.
	●, ▲, ▼	Pin one index is identified by a dot, delta up, or delta down (triangle mark).

Note: In the event the full Microchip part number cannot be marked on one line, it will be carried over to the next line, thus limiting the number of available characters for customer-specific information. Package may or may not include the corporate logo.

Underbar (_) and/or Overbar (¯) symbol may not be to scale.

© 2017 Microchip Technology Inc.

TITLE

8 LEAD SOICN PACKAGE OUTLINE & RECOMMENDED LAND PATTERN

DRAWING #	SOICN-8LD-PL-1	UNIT	INCH [MM]

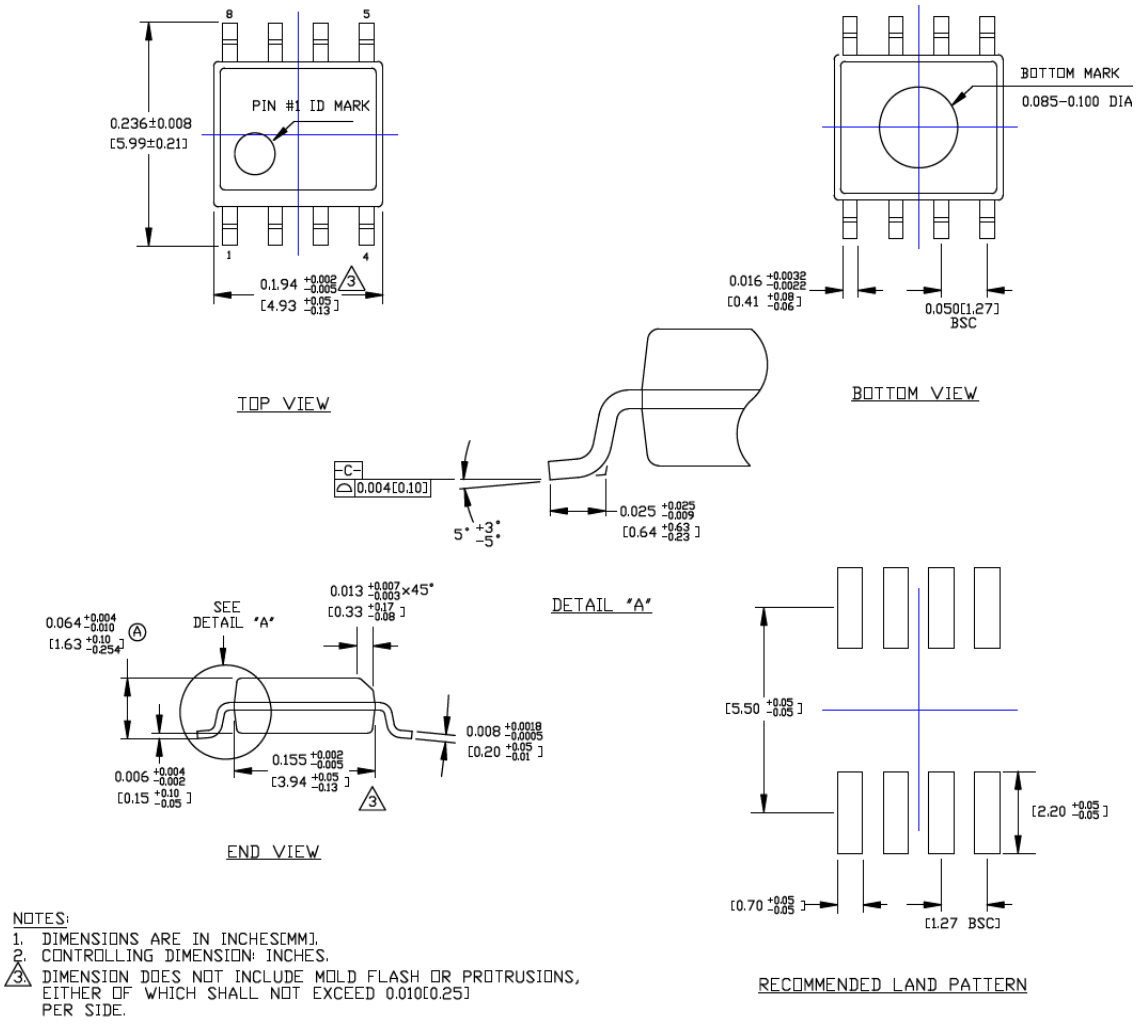

NOTES:

1. DIMENSIONS ARE IN INCHES[MM].
2. CONTROLLING DIMENSION: INCHES.
3. DIMENSION DOES NOT INCLUDE MOLD FLASH OR PROTRUSIONS, EITHER OF WHICH SHALL NOT EXCEED 0.010[0.25] PER SIDE.

Note: For the most current package drawings, please see the Microchip Packaging Specification located at http://www.microchip.com/packaging.

TITLE
8 LEAD PDIP PACKAGE OUTLINE & RECOMMENDED LAND PATTERN

DRAWING #	PDIP-8LD-PL-1	**UNIT**	INCH
Lead Frame	Copper	**Lead Finish**	Matte Tin

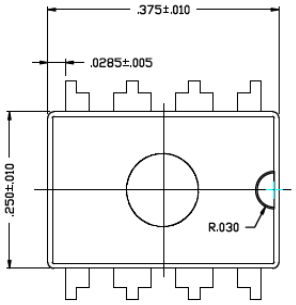

TOP VIEW

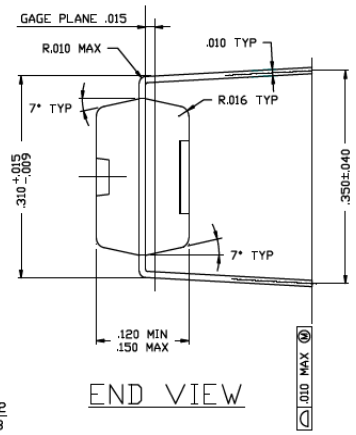

END VIEW

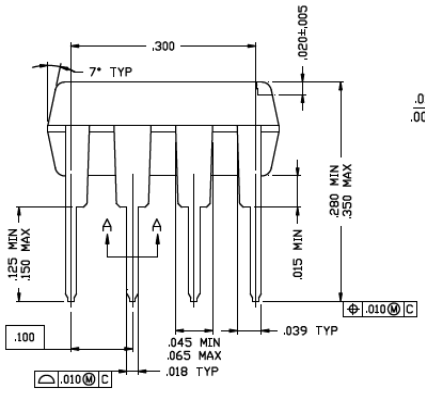

SIDE VIEW

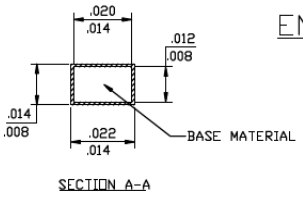

SECTION A-A

Note: For the most current package drawings, please see the Microchip Packaging Specification located at http://www.microchip.com/packaging.

© 2017 Microchip Technology Inc.

APPENDIX A: REVISION HISTORY

Revision A (May 2017)

- Converted Micrel document LP2951 to Microchip data sheet template DS20005736A.
- Minor grammatical text changes throughout.

NOTES:

© 2017 Microchip Technology Inc.

PRODUCT IDENTIFICATION SYSTEM

To order or obtain information, e.g., on pricing or delivery, contact your local Microchip representative or sales office.

PART NO.	-X	X	X
Device	Accuracy	Temperature Range	Package

Device:	LP2951:		100 mA Low-Dropout Voltage Regulator
Accuracy:	02	=	0.5%
	03	=	1.0%
Temperature Range:	Y	=	–40°C to +85°C (RoHS Compliant)
Packages:	M	=	8-pin SOIC
	N	=	8-pin DIP

Examples:

a) LP2951-02YM: 100 mA Low-Dropout Voltage Regulator, 0.5% Accuracy, –40°C to +85°C (RoHS Compliant) 8LD SOIC

b) LP2951-03YM: 100 mA Low-Dropout Voltage Regulator, 1.0% Accuracy, –40°C to +85°C (RoHS Compliant) 8LD SOIC

c) LP2951-02YN: 100 mA Low-Dropout Voltage Regulator, 0.5% Accuracy, –40°C to +85°C (RoHS Compliant) 8LD DIP

Note 1: Tape and Reel identifier only appears in the catalog part number description. This identifier is used for ordering purposes and is not printed on the device package. Check with your Microchip Sales Office for package availability with the Tape and Reel option.

NOTES:

© 2017 Microchip Technology Inc.

Note the following details of the code protection feature on Microchip devices:

- Microchip products meet the specification contained in their particular Microchip Data Sheet.
- Microchip believes that its family of products is one of the most secure families of its kind on the market today, when used in the intended manner and under normal conditions.
- There are dishonest and possibly illegal methods used to breach the code protection feature. All of these methods, to our knowledge, require using the Microchip products in a manner outside the operating specifications contained in Microchip's Data Sheets. Most likely, the person doing so is engaged in theft of intellectual property.
- Microchip is willing to work with the customer who is concerned about the integrity of their code.
- Neither Microchip nor any other semiconductor manufacturer can guarantee the security of their code. Code protection does not mean that we are guaranteeing the product as "unbreakable."

Code protection is constantly evolving. We at Microchip are committed to continuously improving the code protection features of our products. Attempts to break Microchip's code protection feature may be a violation of the Digital Millennium Copyright Act. If such acts allow unauthorized access to your software or other copyrighted work, you may have a right to sue for relief under that Act.

Information contained in this publication regarding device applications and the like is provided only for your convenience and may be superseded by updates. It is your responsibility to ensure that your application meets with your specifications. MICROCHIP MAKES NO REPRESENTATIONS OR WARRANTIES OF ANY KIND WHETHER EXPRESS OR IMPLIED, WRITTEN OR ORAL, STATUTORY OR OTHERWISE, RELATED TO THE INFORMATION, INCLUDING BUT NOT LIMITED TO ITS CONDITION, QUALITY, PERFORMANCE, MERCHANTABILITY OR FITNESS FOR PURPOSE**.** Microchip disclaims all liability arising from this information and its use. Use of Microchip devices in life support and/or safety applications is entirely at the buyer's risk, and the buyer agrees to defend, indemnify and hold harmless Microchip from any and all damages, claims, suits, or expenses resulting from such use. No licenses are conveyed, implicitly or otherwise, under any Microchip intellectual property rights unless otherwise stated.

Microchip received ISO/TS-16949:2009 certification for its worldwide headquarters, design and wafer fabrication facilities in Chandler and Tempe, Arizona; Gresham, Oregon and design centers in California and India. The Company's quality system processes and procedures are for its PIC® MCUs and dsPIC® DSCs, KEELOQ® code hopping devices, Serial EEPROMs, microperipherals, nonvolatile memory and analog products. In addition, Microchip's quality system for the design and manufacture of development systems is ISO 9001:2000 certified.

QUALITY MANAGEMENT SYSTEM
CERTIFIED BY DNV
═ ISO/TS 16949 ═

Trademarks

The Microchip name and logo, the Microchip logo, AnyRate, AVR, AVR logo, AVR Freaks, BeaconThings, BitCloud, CryptoMemory, CryptoRF, dsPIC, FlashFlex, flexPWR, Heldo, JukeBlox, KEELOQ, KEELOQ logo, Kleer, LANCheck, LINK MD, maXStylus, maXTouch, MediaLB, megaAVR, MOST, MOST logo, MPLAB, OptoLyzer, PIC, picoPower, PICSTART, PIC32 logo, Prochip Designer, QTouch, RightTouch, SAM-BA, SpyNIC, SST, SST Logo, SuperFlash, tinyAVR, UNI/O, and XMEGA are registered trademarks of Microchip Technology Incorporated in the U.S.A. and other countries.

ClockWorks, The Embedded Control Solutions Company, EtherSynch, Hyper Speed Control, HyperLight Load, IntelliMOS, mTouch, Precision Edge, and Quiet-Wire are registered trademarks of Microchip Technology Incorporated in the U.S.A.

Adjacent Key Suppression, AKS, Analog-for-the-Digital Age, Any Capacitor, AnyIn, AnyOut, BodyCom, chipKIT, chipKIT logo, CodeGuard, CryptoAuthentication, CryptoCompanion, CryptoController, dsPICDEM, dsPICDEM.net, Dynamic Average Matching, DAM, ECAN, EtherGREEN, In-Circuit Serial Programming, ICSP, Inter-Chip Connectivity, JitterBlocker, KleerNet, KleerNet logo, Mindi, MiWi, motorBench, MPASM, MPF, MPLAB Certified logo, MPLIB, MPLINK, MultiTRAK, NetDetach, Omniscient Code Generation, PICDEM, PICDEM.net, PICkit, PICtail, PureSilicon, QMatrix, RightTouch logo, REAL ICE, Ripple Blocker, SAM-ICE, Serial Quad I/O, SMART-I.S., SQI, SuperSwitcher, SuperSwitcher II, Total Endurance, TSHARC, USBCheck, VariSense, ViewSpan, WiperLock, Wireless DNA, and ZENA are trademarks of Microchip Technology Incorporated in the U.S.A. and other countries.

SQTP is a service mark of Microchip Technology Incorporated in the U.S.A.

Silicon Storage Technology is a registered trademark of Microchip Technology Inc. in other countries.

GestIC is a registered trademark of Microchip Technology Germany II GmbH & Co. KG, a subsidiary of Microchip Technology Inc., in other countries.

All other trademarks mentioned herein are property of their respective companies.

© 2017, Microchip Technology Incorporated, All Rights Reserved.

ISBN: 978-1-5224-1711-8

Worldwide Sales and Service

AMERICAS

Corporate Office
2355 West Chandler Blvd.
Chandler, AZ 85224-6199
Tel: 480-792-7200
Fax: 480-792-7277
Technical Support:
http://www.microchip.com/support
Web Address:
www.microchip.com

Atlanta
Duluth, GA
Tel: 678-957-9614
Fax: 678-957-1455

Austin, TX
Tel: 512-257-3370

Boston
Westborough, MA
Tel: 774-760-0087
Fax: 774-760-0088

Chicago
Itasca, IL
Tel: 630-285-0071
Fax: 630-285-0075

Dallas
Addison, TX
Tel: 972-818-7423
Fax: 972-818-2924

Detroit
Novi, MI
Tel: 248-848-4000

Houston, TX
Tel: 281-894-5983

Indianapolis
Noblesville, IN
Tel: 317-773-8323
Fax: 317-773-5453
Tel: 317-536-2380

Los Angeles
Mission Viejo, CA
Tel: 949-462-9523
Fax: 949-462-9608
Tel: 951-273-7800

Raleigh, NC
Tel: 919-844-7510

New York, NY
Tel: 631-435-6000

San Jose, CA
Tel: 408-735-9110
Tel: 408-436-4270

Canada - Toronto
Tel: 905-695-1980
Fax: 905-695-2078

ASIA/PACIFIC

Asia Pacific Office
Suites 3707-14, 37th Floor
Tower 6, The Gateway
Harbour City, Kowloon

Hong Kong
Tel: 852-2943-5100
Fax: 852-2401-3431

Australia - Sydney
Tel: 61-2-9868-6733
Fax: 61-2-9868-6755

China - Beijing
Tel: 86-10-8569-7000
Fax: 86-10-8528-2104

China - Chengdu
Tel: 86-28-8665-5511
Fax: 86-28-8665-7889

China - Chongqing
Tel: 86-23-8980-9588
Fax: 86-23-8980-9500

China - Dongguan
Tel: 86-769-8702-9880

China - Guangzhou
Tel: 86-20-8755-8029

China - Hangzhou
Tel: 86-571-8792-8115
Fax: 86-571-8792-8116

China - Hong Kong SAR
Tel: 852-2943-5100
Fax: 852-2401-3431

China - Nanjing
Tel: 86-25-8473-2460
Fax: 86-25-8473-2470

China - Qingdao
Tel: 86-532-8502-7355
Fax: 86-532-8502-7205

China - Shanghai
Tel: 86-21-3326-8000
Fax: 86-21-3326-8021

China - Shenyang
Tel: 86-24-2334-2829
Fax: 86-24-2334-2393

China - Shenzhen
Tel: 86-755-8864-2200
Fax: 86-755-8203-1760

China - Wuhan
Tel: 86-27-5980-5300
Fax: 86-27-5980-5118

China - Xian
Tel: 86-29-8833-7252
Fax: 86-29-8833-7256

ASIA/PACIFIC

China - Xiamen
Tel: 86-592-2388138
Fax: 86-592-2388130

China - Zhuhai
Tel: 86-756-3210040
Fax: 86-756-3210049

India - Bangalore
Tel: 91-80-3090-4444
Fax: 91-80-3090-4123

India - New Delhi
Tel: 91-11-4160-8631
Fax: 91-11-4160-8632

India - Pune
Tel: 91-20-3019-1500

Japan - Osaka
Tel: 81-6-6152-7160
Fax: 81-6-6152-9310

Japan - Tokyo
Tel: 81-3-6880- 3770
Fax: 81-3-6880-3771

Korea - Daegu
Tel: 82-53-744-4301
Fax: 82-53-744-4302

Korea - Seoul
Tel: 82-2-554-7200
Fax: 82-2-558-5932 or
82-2-558-5934

Malaysia - Kuala Lumpur
Tel: 60-3-6201-9857
Fax: 60-3-6201-9859

Malaysia - Penang
Tel: 60-4-227-8870
Fax: 60-4-227-4068

Philippines - Manila
Tel: 63-2-634-9065
Fax: 63-2-634-9069

Singapore
Tel: 65-6334-8870
Fax: 65-6334-8850

Taiwan - Hsin Chu
Tel: 886-3-5778-366
Fax: 886-3-5770-955

Taiwan - Kaohsiung
Tel: 886-7-213-7830

Taiwan - Taipei
Tel: 886-2-2508-8600
Fax: 886-2-2508-0102

Thailand - Bangkok
Tel: 66-2-694-1351
Fax: 66-2-694-1350

EUROPE

Austria - Wels
Tel: 43-7242-2244-39
Fax: 43-7242-2244-393

Denmark - Copenhagen
Tel: 45-4450-2828
Fax: 45-4485-2829

Finland - Espoo
Tel: 358-9-4520-820

France - Paris
Tel: 33-1-69-53-63-20
Fax: 33-1-69-30-90-79

France - Saint Cloud
Tel: 33-1-30-60-70-00

Germany - Garching
Tel: 49-8931-9700

Germany - Haan
Tel: 49-2129-3766400

Germany - Heilbronn
Tel: 49-7131-67-3636

Germany - Karlsruhe
Tel: 49-721-625370

Germany - Munich
Tel: 49-89-627-144-0
Fax: 49-89-627-144-44

Germany - Rosenheim
Tel: 49-8031-354-560

Israel - Ra'anana
Tel: 972-9-744-7705

Italy - Milan
Tel: 39-0331-742611
Fax: 39-0331-466781

Italy - Padova
Tel: 39-049-7625286

Netherlands - Drunen
Tel: 31-416-690399
Fax: 31-416-690340

Norway - Trondheim
Tel: 47-7289-7561

Poland - Warsaw
Tel: 48-22-3325737

Romania - Bucharest
Tel: 40-21-407-87-50

Spain - Madrid
Tel: 34-91-708-08-90
Fax: 34-91-708-08-91

Sweden - Gothenberg
Tel: 46-31-704-60-40

Sweden - Stockholm
Tel: 46-8-5090-4654

UK - Wokingham
Tel: 44-118-921-5800
Fax: 44-118-921-5820

© 2017 Microchip Technology Inc.

ENTEGRECİ

Bu belge www.entegreci.com üzerinden sunulmaktadır.

Elektronik komponent tedarikinde Entegreci

Entegreci, Eskişehir merkezli, Türkiye geneline satış yapan bir elektronik komponent mağazasıdır. Entegreler (IC), mikrodenetleyiciler, transistörler, diyotlar, pasif elemanlar, konnektörler, modüller ve geliştirme kartları tek adetten seri üretim adetlerine kadar satılır. Ürün sayfalarında güncel stok durumunu, fiyatı ve datasheet bağlantısını bulabilirsiniz.

Parça koduyla arama

Üretici parça numarasını yazın; stok ve fiyatı hemen görün.

www.entegreci.com

Ürün kategorileri

Entegreden kapasitöre tüm elektronik komponent kategorileri.

Kategorilere göz atın

Üreticiler

Aradığınız üreticinin ürünlerini tek sayfada inceleyin.

Üreticileri görün

Toplu alım ve teklif

Listede olmayan ya da yüksek adetli parçalar için teklif isteyin.

Teklif isteyin

www.entegreci.com | **destek@entegreci.com** | **0850 305 90 34**

Entegreci is an online electronic components store based in Türkiye. Search by manufacturer part number to see stock, prices and datasheets for integrated circuits, microcontrollers, transistors, passive components and connectors, or request a quote for parts that are not listed.

Bu sayfa Entegreci tarafından eklenmiştir. Belgenin önceki sayfaları asıl yayıncısına aittir ve içeriği değiştirilmemiştir; en güncel sürüm için belgenin yayıncısına başvurun.