MCP1701A

2 µA Low-Dropout Positive Voltage Regulator

Features

- 2.0 µA Typical Quiescent Current
- Input Operating Voltage Range up to 10.0V
- Low-Dropout Voltage (LDO):
  - 120 mV (typical) @ 100 mA
  - 380 mV (typical) @ 200 mA
- High Output Current: 250 mA (V_{OUT} = 5.0V)
- High-Accuracy Output Voltage: ±2% (max)
- Low Temperature Drift: ±100 ppm/°C (typical)
- Excellent Line Regulation: 0.2%/V (typical)
- Package Options: 3-Pin SOT-23A, 3-Pin SOT-89, and 3-Pin TO-92
- Short Circuit Protection
- Standard Output Voltage Options:
  - 1.8V, 2.5V, 3.0V, 3.3V, 5.0V

Applications

- Battery-Powered Devices
- Battery-Powered Alarm Circuits
- Smoke Detectors
- CO^2 Detectors
- Smart Battery Packs
- PDAs
- Low-Quiescent Current Voltage Reference
- Cameras and Portable Video Equipment
- Pagers and Cellular Phones
- Solar-Powered Instruments
- Consumer Products
- Microcontroller Power

General Description

The MCP1701A is a family of CMOS low-dropout, positive voltage regulators that can deliver up to 250 mA of current while consuming only 2.0 µA of quiescent current (typ.). The input operating range is specified up to 10V, making it ideal for lithium-ion (one or two cells), 9V alkaline and other two and three primary cell battery-powered applications.

The MCP1701A is capable of delivering 250 mA with an input-to-output voltage differential (dropout voltage) of 650 mV. The low-dropout voltage extends the battery operating lifetime. It also permits high currents in small packages when operated with minimum $V_{IN} - V_{OUT}$ differentials. The MCP1701A offers improved startup and transient response.

The MCP1701A has a tight tolerance output voltage regulation of ±0.5% (typ.) and very good line regulation at ±0.2%. The LDO output is stable when using only 1 µF of output capacitance of either tantalum or aluminum-electrolytic style capacitors. The MCP1701A LDO also incorporates short circuit protection to ensure maximum reliability.

Package options include the 3-pin SOT-23A, 3-pin SOT-89 and 3-Pin TO-92.

Package Types

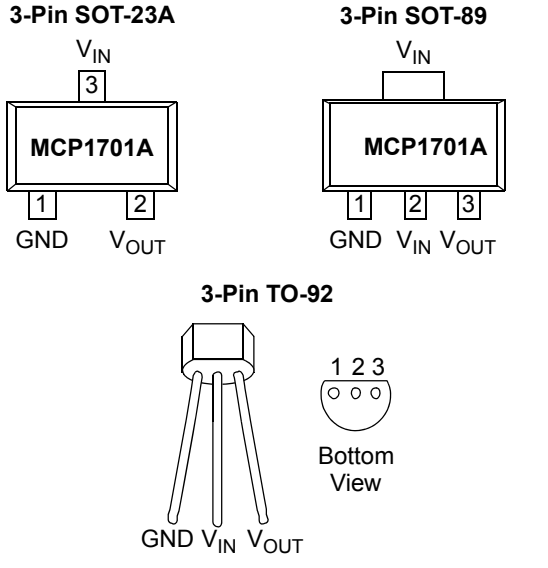

Note: 3-Pin SOT-23A is equivalent to the EIAJ SC-59.

© 2007 Microchip Technology Inc.

Functional Block Diagram

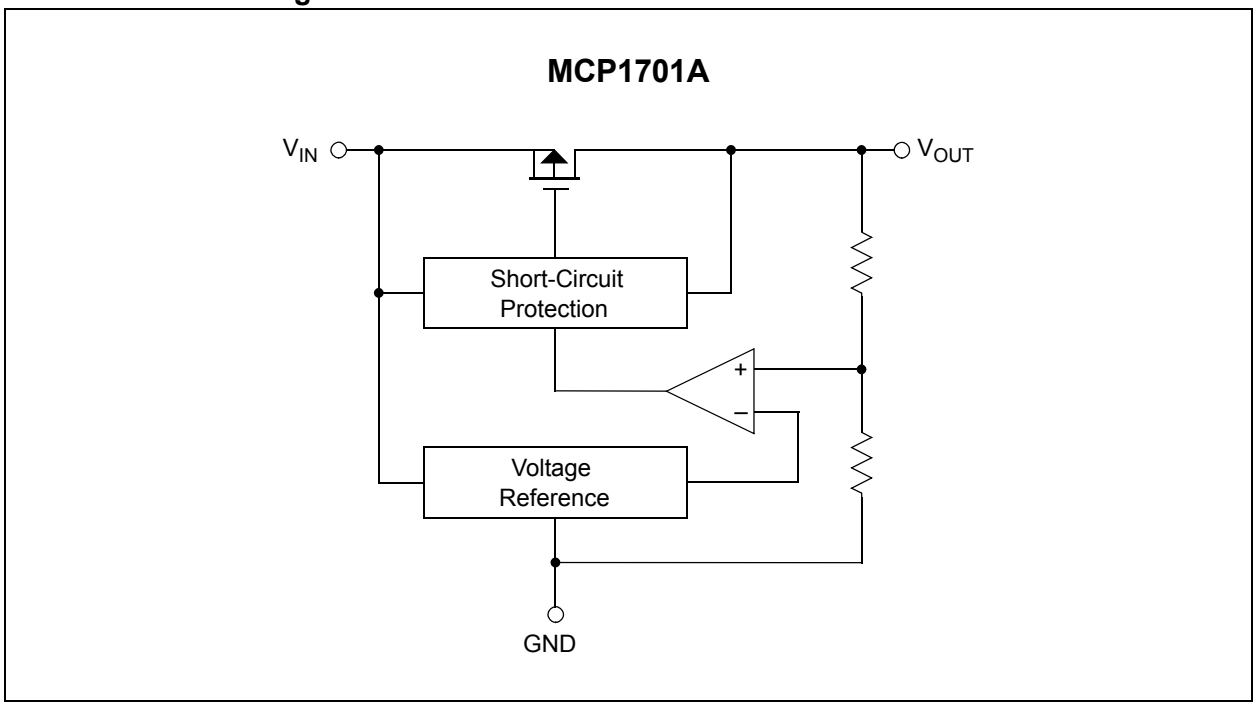

Typical Application Circuits

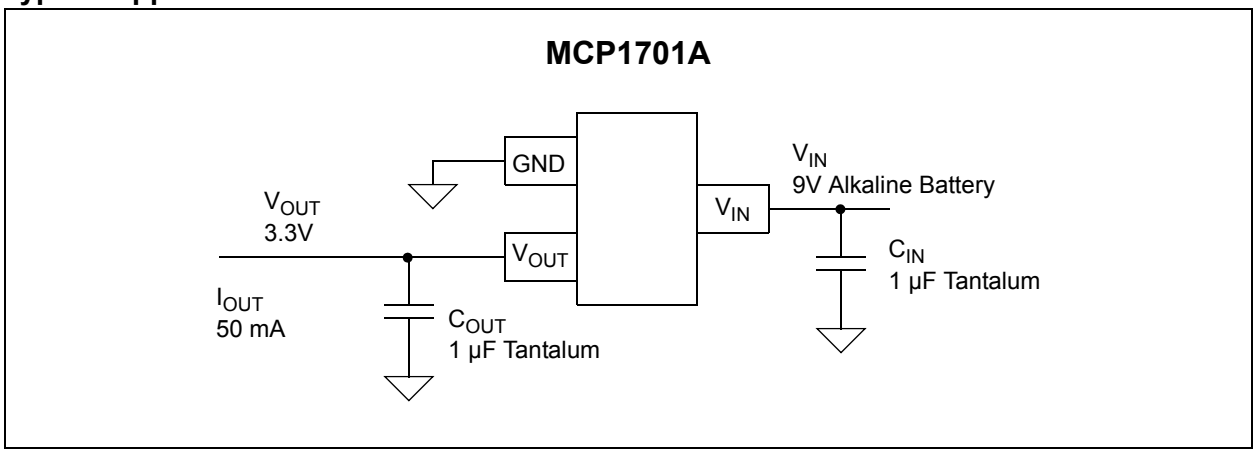

© 2007 Microchip Technology Inc.

1.0 ELECTRICAL CHARACTERISTICS

Absolute Maximum Ratings †

Input Voltage ..... +12V
Output Current (Continuous)..... $P_D/(V_{IN} – V_{OUT})$mA
Output Current (peak) ..... 500 mA
Output Voltage ..... (GND – 0.3V) to (V_{IN} + 0.3V)
Continuous Power Dissipation:
3-Pin SOT-23A ..... 150 mW
3-Pin SOT-89..... 500 mW
3-Pin TO-92 ..... 300 mW

† Notice: Stresses above those listed under "Absolute Maximum Ratings" may cause permanent damage to the device. These are stress ratings only and functional operation of the device at these or any other conditions above those indicated in the operation sections of the specifications is not implied. Exposure to Absolute Maximum Rating conditions for extended periods may affect device reliability.

ELECTRICAL CHARACTERISTICS

Electrical Specifications: Unless otherwise specified, all limits are established for an ambient temperature of T_A = +25°C.

Parameters	Sym	Min	Typ	Max	Units	Conditions
Output Voltage Regulation	V_{OUT}	V_R - 2%	V_R±0.5%	V_R + 2%	V	I_{OUT} = 40 mA **(Note 1)**
Maximum Output Current	I_{OUTMAX}	250	—	—	mA	V_{OUT} = 5.0V (V_{IN} = V_R + 1.0V)
		200	—	—		V_{OUT} = 4.0V
		150	—	—		V_{OUT} = 3.3V
		150	—	—		V_{OUT} = 3.0V
		125	—	—		V_{OUT} = 2.5V
		110	—	—		V_{OUT} = 1.8V
Load Regulation **(Note 3)**	$\Delta V_{OUT}/V_{OUT}$	-1.60	±0.8	+1.60	%	V_{OUT} = 5.0V, 1 mA ≤ I_{OUT} ≤ 100 mA
		-2.25	±1.1	+2.25		V_{OUT} = 4.0V, 1 mA ≤ I_{OUT} ≤ 100 mA
		-2.72	±1.3	+2.72		V_{OUT} = 3.3V, 1 mA ≤ I_{OUT} ≤ 80 mA
		-3.00	±1.5	+3.00		V_{OUT} = 3.0V, 1 mA ≤ I_{OUT} ≤ 80 mA
		-3.60	±1.8	+3.60		V_{OUT} = 2.5V, 1 mA ≤ I_{OUT} ≤ 60 mA
		-1.60	±0.8	+1.60		V_{OUT} = 1.8V, 1 mA ≤ I_{OUT} ≤ 30 mA
Dropout Voltage	V_{IN} - V_{OUT}	—	380	600	mV	I_{OUT} = 200 mA, V_R = 5.0V
		—	400	630		I_{OUT} = 200 mA, V_R = 4.0V
		—	400	700		I_{OUT} = 150 mA, V_R = 3.3V
		—	400	700		I_{OUT} = 150 mA, V_R = 3.0V
		—	400	700		I_{OUT} = 120 mA, V_R = 2.5V
		—	180	300		I_{OUT} = 20 mA, V_R = 1.8V
Input Quiescent Current	I_Q	—	2.0	4.5	µA	V_{IN} = V_R + 1.0V
Line Regulation	$\frac{\Delta V_{OUT} \cdot 100}{\Delta V_{IN} \cdot V_{OUT}}$	—	0.2	0.3	%/V	I_{OUT} = 40 mA, (V_R +1) ≤ V_{IN} ≤ 10.0V
Input Voltage	V_{IN}	—	—	10	V	
Temperature Coefficient of Output Voltage	TCV_{OUT}	—	±100	—	ppm/°C	I_{OUT} = 40 mA, -40°C ≤ T_A ≤ +85°C **(Note 2)**
Output Rise Time	T_R	—	200	—	µs	10% V_R to 90% V_R, V_{IN} = 0V to V_R +1V, R_L = 25Ω resistive

1: V_R is the nominal regulator output voltage. For example: V_R = 1.8V, 2.5V, 3.3V, 4.0V, 5.0V. The input voltage V_{IN} = V_R + 1.0V, I_{OUT} = 40 mA.

2: TCV_{OUT} = ($V_{OUT-HIGH}$ – $V_{OUT-LOW}$) *10^6 / (V_R * ΔTemperature), $V_{OUT-HIGH}$ = Highest voltage measured over the temperature range. $V_{OUT-LOW}$ = Lowest voltage measured over the temperature range.

3: Load regulation is measured at a constant junction temperature using low duty cycle pulse testing.

© 2007 Microchip Technology Inc.

TEMPERATURE CHARACTERISTICS

Electrical Specifications: Unless otherwise specified, T_A = +25°C.						
Parameters	**Sym**	**Min**	**Typ**	**Max**	**Units**	**Conditions**
Temperature Ranges						
Specified Temperature Range (I)	T_A	-40	—	+85	°C	
Storage Temperature Range	T_A	-40	—	+125	°C	
Package Thermal Resistances						
Thermal Resistance, 3L-SOT-23A	θ_{JA}	—	335	—	°C/W	Minimum trace width single layer application
		—	230	—	°C/W	Typical FR4, 4-layer application
Thermal Resistance, 3L-SOT-89	θ_{JA}	—	52	—	°C/W	Typical, when mounted on 1 square inch of copper
Thermal Resistance, 3L-TO-92	θ_{JA}	—	131.9	—	°C/W	EIA/JEDEC JESD51-751-7 4-layer board

© 2007 Microchip Technology Inc.

2.0 TYPICAL PERFORMANCE CURVES

Note: The graphs and tables provided following this note are a statistical summary based on a limited number of samples and are provided for informational purposes only. The performance characteristics listed herein are not tested or guaranteed. In some graphs or tables, the data presented may be outside the specified operating range (e.g., outside specified power supply range) and therefore outside the warranted range.

Notes: Unless otherwise specified, V_{OUT} = 1.8V, 3.3V, 5.0V, T_A = +25°C, C_{IN} = 1 µF Tantalum, C_{OUT} = 1 µF Tantalum.

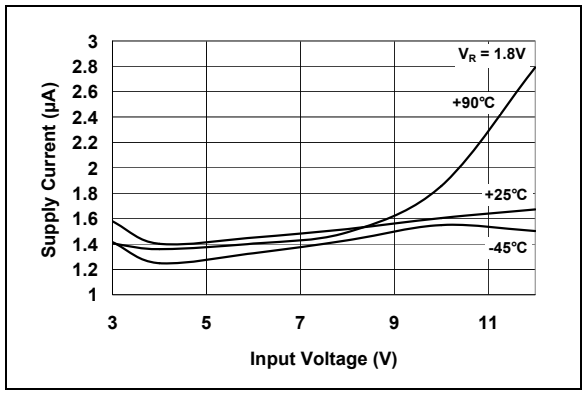

FIGURE 2-1: *Supply Current vs. Input Voltage (V_R = 1.8V).*

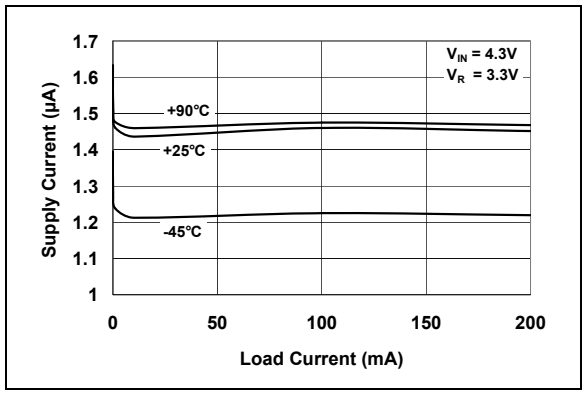

FIGURE 2-4: *Supply Current vs. Load Current (V_R = 3.3V).*

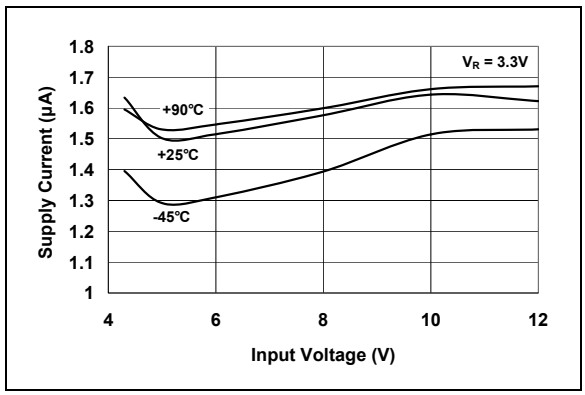

FIGURE 2-2: *Supply Current vs. Input Voltage (V_R = 3.3V).*

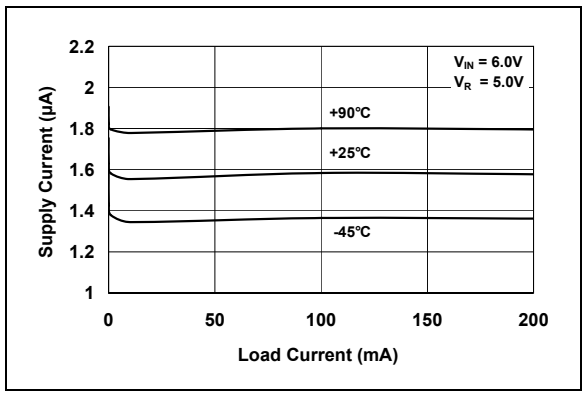

FIGURE 2-5: *Supply Current vs. Load Current (V_R = 5.0V).*

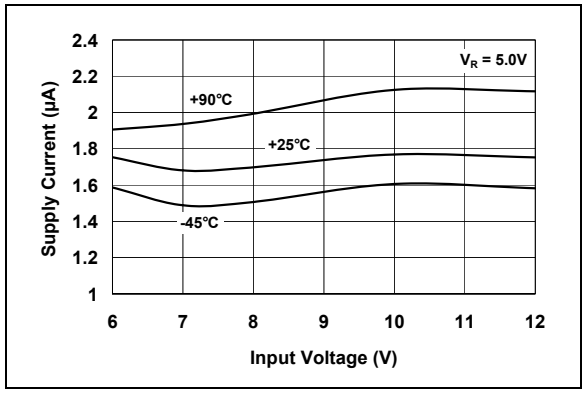

FIGURE 2-3: *Supply Current vs. Input Voltage (V_R = 5.0V).*

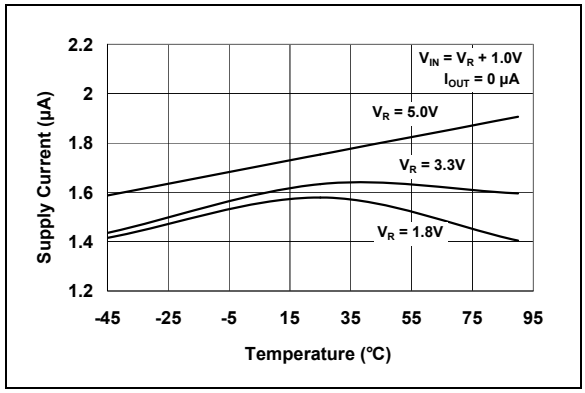

FIGURE 2-6: *Supply Current vs. Temperature.*

Note: Unless otherwise indicated, V_{OUT} = 1.8V, 3.3V, 5.0V, T_A = +25°C, C_{IN} = 1 µF Tantalum, C_{OUT} = 1 µF Tantalum.

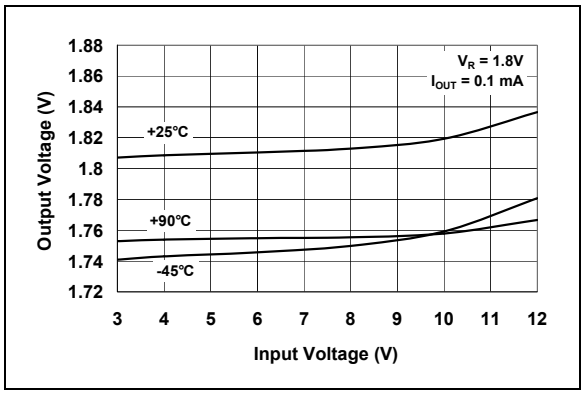

FIGURE 2-7: *Output Voltage vs. Input Voltage (V_R = 1.8V).*

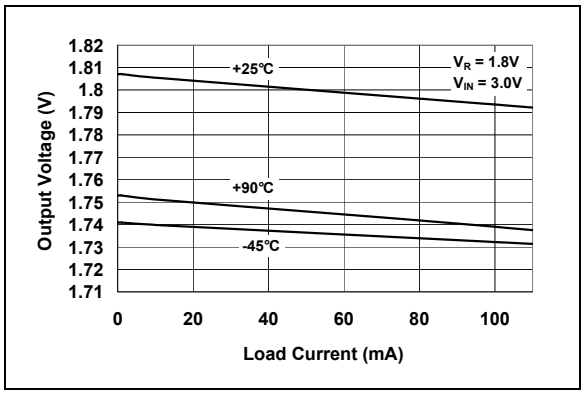

FIGURE 2-10: *Output Voltage vs. Load Current (V_R = 1.8V).*

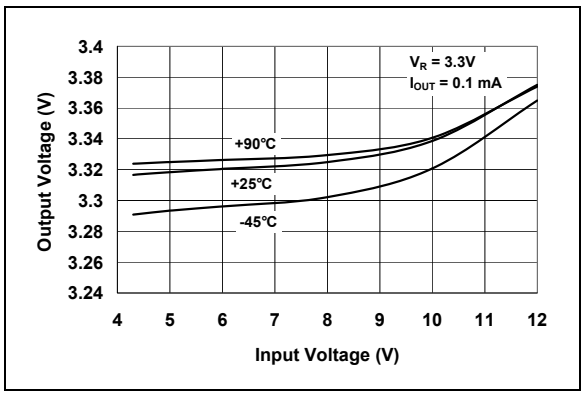

FIGURE 2-8: *Output Voltage vs. Input Voltage (V_R = 3.3V).*

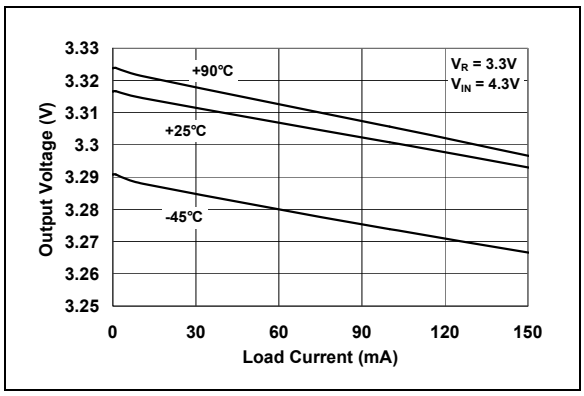

FIGURE 2-11: *Output Voltage vs. Load Current (V_R = 3.3V).*

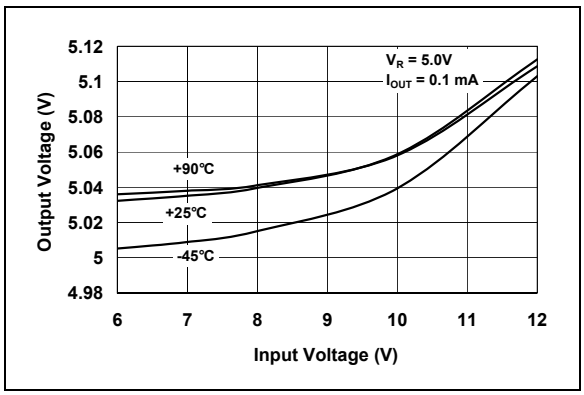

FIGURE 2-9: *Output Voltage vs. Input Voltage (V_R = 5.0V).*

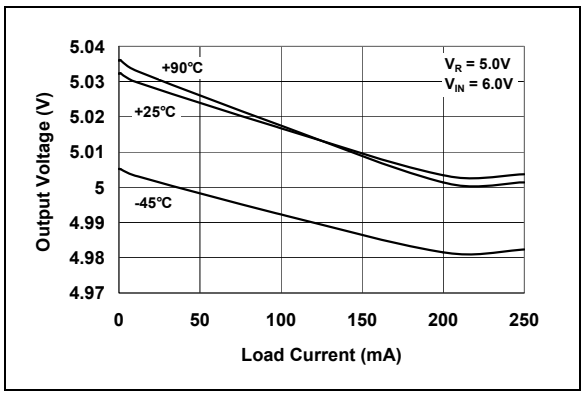

FIGURE 2-12: *Output Voltage vs. Load Current (V_R = 5.0V).*

© 2007 Microchip Technology Inc.

Note: Unless otherwise indicated, V_{OUT} = 1.8V, 3.3V, 5.0V, T_A = +25°C, C_{IN} = 1 µF Tantalum, C_{OUT} = 1 µF Tantalum.

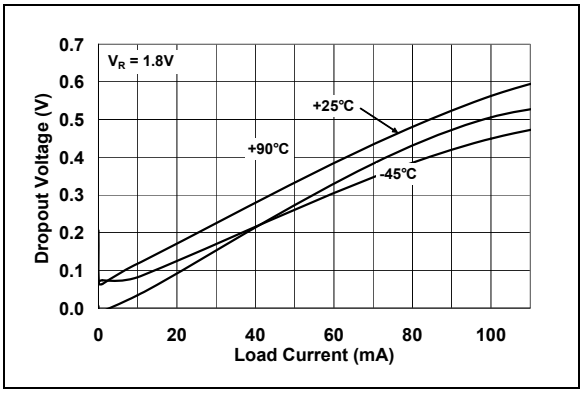

FIGURE 2-13: *Dropout Voltage vs. Load Current (V_R = 1.8V).*

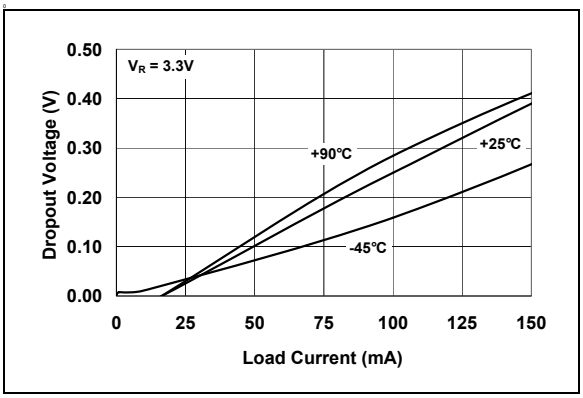

FIGURE 2-14: *Dropout Voltage vs. Load Current (V_R = 3.3V).*

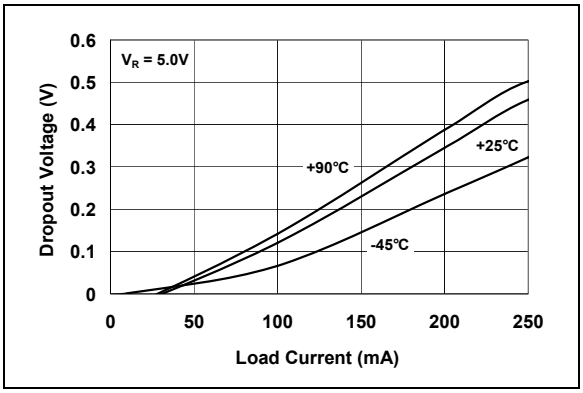

FIGURE 2-15: *Dropout Voltage vs. Load Current (V_R = 5.0V).*

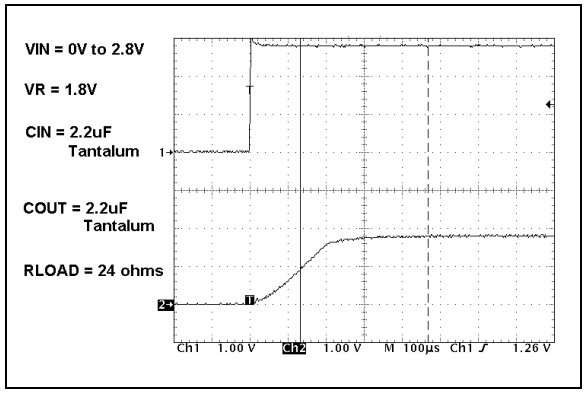

FIGURE 2-16: *Start-up From V_{IN} (V_R = 1.8V).*

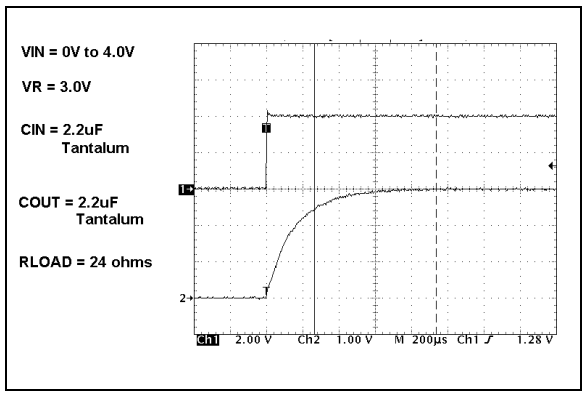

FIGURE 2-17: *Start-up From V_{IN} (V_R = 3.3V).*

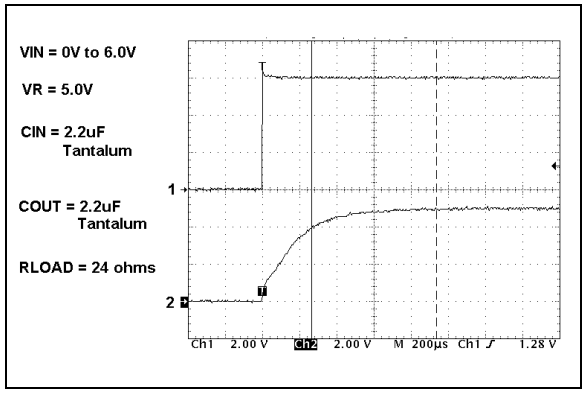

FIGURE 2-18: *Start-up From V_{IN} (V_R = 5.0V).*

Note: Unless otherwise indicated, V_{OUT} = 1.8V, 3.3V, 5.0V, T_A = +25°C, C_{IN} = 1 µF Tantalum, C_{OUT} = 1 µF Tantalum.

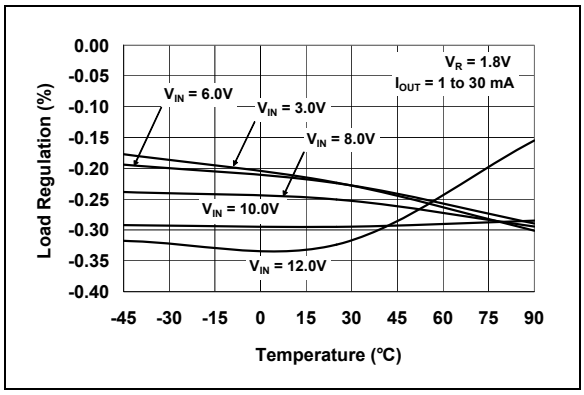

FIGURE 2-19: *Load Regulation vs. Temperature (V_R = 1.8V).*

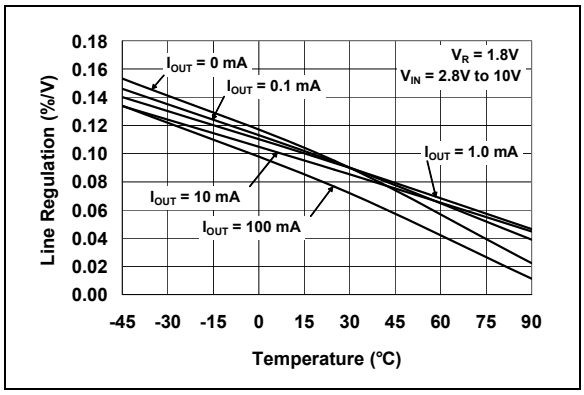

FIGURE 2-22: *Line Regulation vs. Temperature (V_R = 1.8V).*

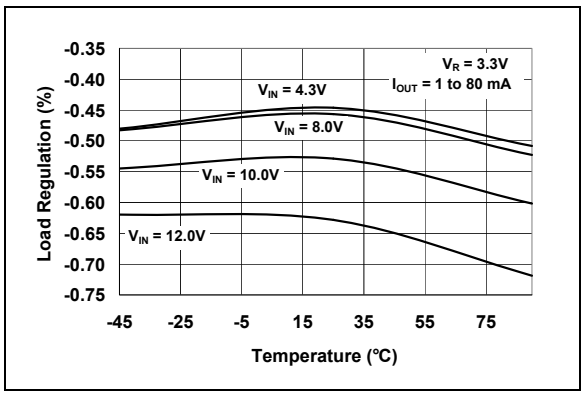

FIGURE 2-20: *Load Regulation vs. Temperature (V_R = 3.3V).*

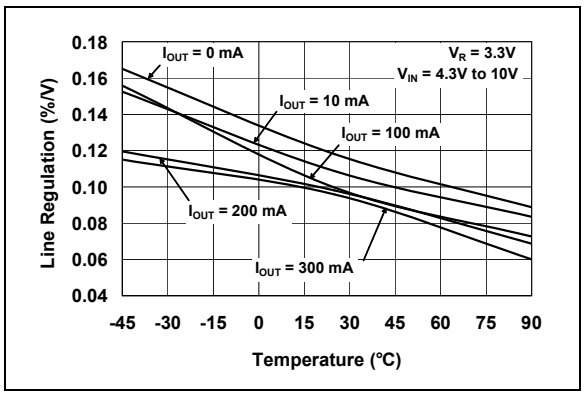

FIGURE 2-23: *Line Regulation vs. Temperature (V_R = 3.3V).*

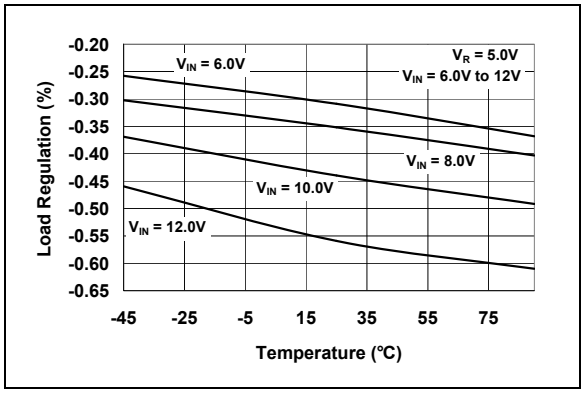

FIGURE 2-21: *Load Regulation vs. Temperature (V_R = 5.0V).*

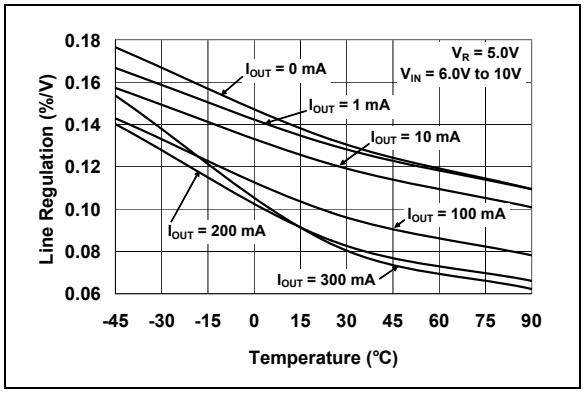

FIGURE 2-24: *Line Regulation vs. Temperature (V_R = 5.0V).*

© 2007 Microchip Technology Inc.

3.0 PIN DESCRIPTIONS

The descriptions of the pins are listed in Table 3-1.

TABLE 3-1: PIN FUNCTION TABLE

Pin No. SOT-23A	Pin No. SOT-89	Pin No. TO-92	Name	Function
1	1	1	GND	Ground Terminal
2	3	3	V_{OUT}	Regulated Voltage Output
3	2	2	V_{IN}	Unregulated Supply Input

3.1 Ground Terminal (GND)

Regulator ground. Tie GND to the negative side of the output and the negative side of the input capacitor. Only the LDO bias current (2 µA, typ.) flows out of this pin, there is no high current. The LDO output regulation is referenced to this pin. Minimize voltage drops between this pin and the negative side of the load.

3.2 Regulated Voltage Output (V_{OUT})

Connect V_{OUT} to the positive side of the load and the positive terminal of the output capacitor. The positive side of the output capacitor should be physically located as close as possible to the LDO V_{OUT} pin. The current flowing out of this pin is equal to the DC load current.

3.3 Unregulated Supply Input (V_{IN})

Connect the input supply voltage and the positive side of the input capacitor to V_{IN}. Like all low-dropout linear regulators, low source impedance is necessary for the stable operation of the LDO. The amount of capacitance required to ensure low source impedance will depend on the proximity of the input source capacitors or battery type. The input capacitor should be physically located as close as possible to the V_{IN} pin. For most applications, 1 µF of capacitance will ensure stable operation of the LDO circuit. For applications that have load currents below 100 mA, the input capacitance requirement can be lowered. The type of capacitor used can be ceramic, tantalum or aluminum electrolytic. The low equivalent series resistance characteristics of the ceramic will yield better noise and PSRR performance at high frequency. The current flow into this pin is equal to the DC load current, plus the LDO bias current (2 µA, typical).

4.0 DETAILED DESCRIPTION

The MCP1701A is a low-quiescent current, precision, fixed-output voltage LDO. Unlike bipolar regulators, the MCP1701A supply current does not increase proportionally with load current.

4.1 Output Capacitor

A minimum of 1 µF output capacitor is required. The output capacitor should have an ESR greater than 0.1Ω and less than 5Ω, plus a resonant frequency above 1 MHz. Larger output capacitors can be used to improve supply noise rejection and transient response. Care should be taken when increasing C_{OUT} to ensure that the input impedance is not high enough to cause high input impedance oscillation.

4.2 Input Capacitor

A 1 µF input capacitor is recommended for most applications when the input impedance is on the order of 10Ω. Larger input capacitance may be required for stability when operating from a battery input, or if there is a large distance from the input source to the LDO. When large values of output capacitance are used, the input capacitance should be increased to prevent high source impedance oscillations.

4.3 Overcurrent

The MCP1701 internal circuitry monitors the amount of current flowing through the P-channel pass transistor. In the event of a short circuit or excessive output current, the MCP1701 will act to limit the output current.

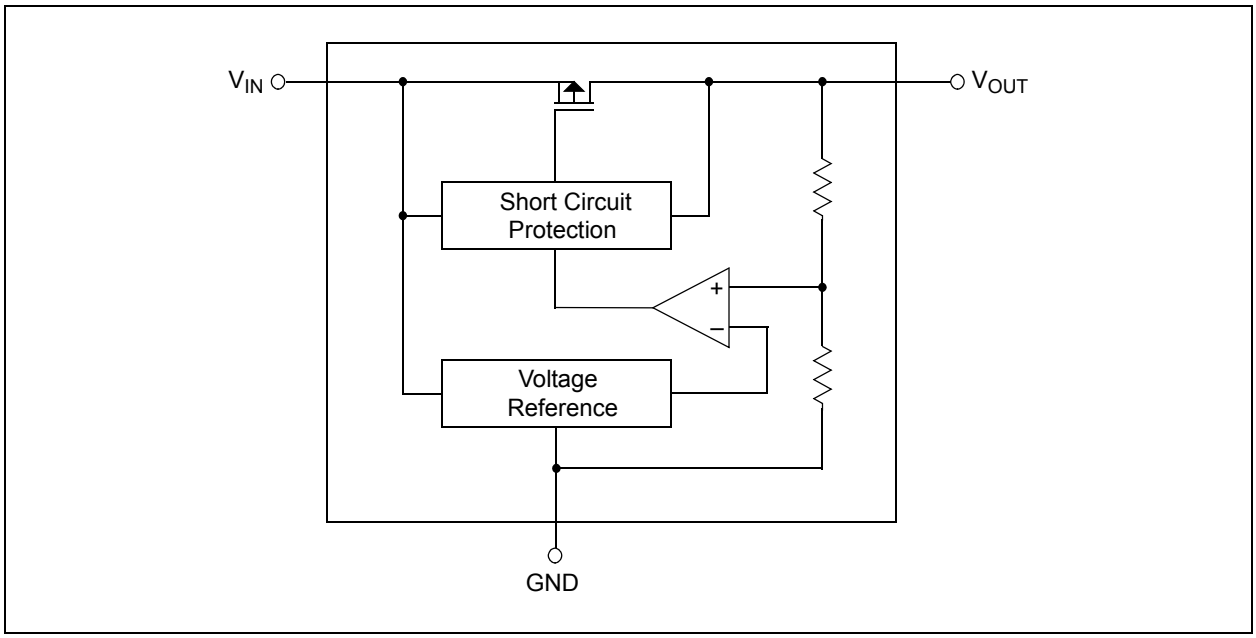

FIGURE 4-1: *MCP1701A Block Diagram.*

© 2007 Microchip Technology Inc.

5.0 THERMAL CONSIDERATIONS

5.1 Power Dissipation

The amount of power dissipated internal to the LDO linear regulator is the sum of the power dissipation within the linear pass device (P-channel MOSFET) and the quiescent current required to bias the internal reference and error amplifier. The internal linear pass device power dissipation is calculated as shown in Equation 5-1.

EQUATION 5-1:

$$P_D\ (Pass\ Device) = (V_{IN} - V_{OUT}) \times I_{OUT}$$

The internal power dissipation, as a result of the bias current for the LDO internal reference and error amplifier, is calculated as shown in Equation 5-2.

EQUATION 5-2:

$$P_D\ (Bias) = V_{IN} \times I_{GND}$$

The total internal power dissipation is the sum of P_D (pass device) and P_D (bias).

EQUATION 5-3:

$$P_{TOTAL} = P_D\ (Pass\ Device) + P_D\ (Bias)$$

For the MCP1701A, the internal quiescent bias current is so low (2 µA, typ.) that the P_D (bias) term of the power dissipation equation can be ignored. The maximum power dissipation can be estimated by using the maximum input voltage and the minimum output voltage to obtain a maximum voltage differential between input and output. The next step would be to multiply the maximum voltage differential by the maximum output current.

EQUATION 5-4:

$$P_D = (V_{INMAX} - V_{OUTMIN}) \times I_{OUTMAX}$$

Given:

V_{IN} = 3.3V to 4.1V
V_{OUT} = 3.0V ± 2%
I_{OUT} = 1 mA to 100 mA
T_{AMAX} = 55°C
P_{MAX} = (4.1V – (3.0V x 0.98)) x 100 mA

To determine the junction temperature of the device, the thermal resistance from junction-to-ambient must be known. The 3-pin SOT-23A thermal resistance from junction-to-air ($R_{\theta JA}$) is estimated to be approximately 335°C/W. The SOT-89 $R_{\theta JA}$ is estimated to be approximately 52°C/W when mounted on 1 square inch of copper. The $R_{\theta JA}$ will vary with physical layout, airflow and other application-specific conditions.

The device junction temperature is determined by calculating the junction temperature rise above ambient, then adding the rise to the ambient temperature.

EQUATION 5-5: JUNCTION TEMPERATURE – SOT-23A EXAMPLE:

$$T_J = P_{DMAX} \times R_{\theta JA} + T_A$$
$$T_J = 116.0\ milliwatts \times 335\,°C/W + 55\,°C$$
$$T_J = 93.9\,°C$$

EQUATION 5-6: JUNCTION TEMPERATURE – SOT-89 EXAMPLE:

$$T_J = 116.0\ milliwatts \times 52\,°C/W + 55\,°C$$
$$T_J = 61\,°C$$

6.0 PACKAGING INFORMATION

6.1 Package Marking Information

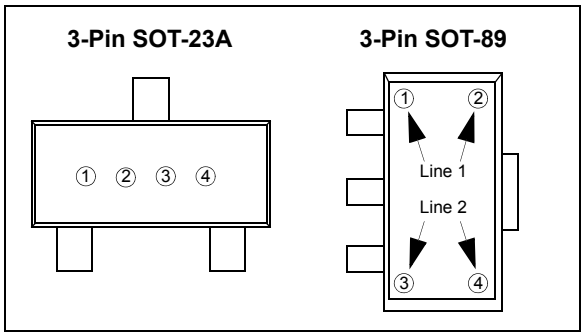

① represents first voltage digit
1V, 2V, 3V, 4V, 5V, 6V

Ex: 3.xV = ③ ◯ ◯ ◯

② represents first decimal place voltage (x.0 - x.9)

Ex: 3.4V = ③ Ⓔ ◯ ◯

Symbol	Voltage	Symbol	Voltage
A	x.0	F	x.5
B	x.1	H	x.6
C	x.2	K	x.7
D	x.3	L	x.8
E	x.4	M	x.9

③ represents polarity
0 = Positive (fixed)

④ represents assembly lot number

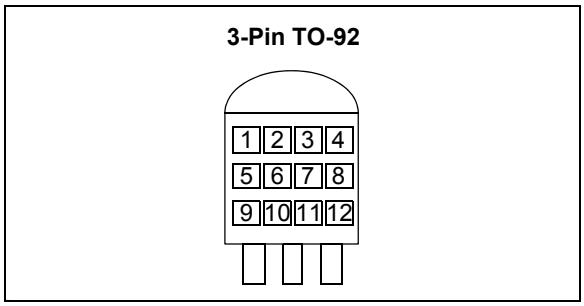

①, ②, ③ & ④ = 701A (fixed)

⑤ represents first voltage digit (1-6)

⑥ represents first voltage decimal (0-9)

⑦ represents extra feature code: fixed: 0

⑧ represents regulation accuracy
2 = ±2.0% (standard)

⑨, ⑩, ⑪ & ⑫ represents assembly lot number

© 2007 Microchip Technology Inc.

3-Lead Plastic Small Outline Transistor (CB) [SOT-23A]

Note: For the most current package drawings, please see the Microchip Packaging Specification located at http://www.microchip.com/packaging

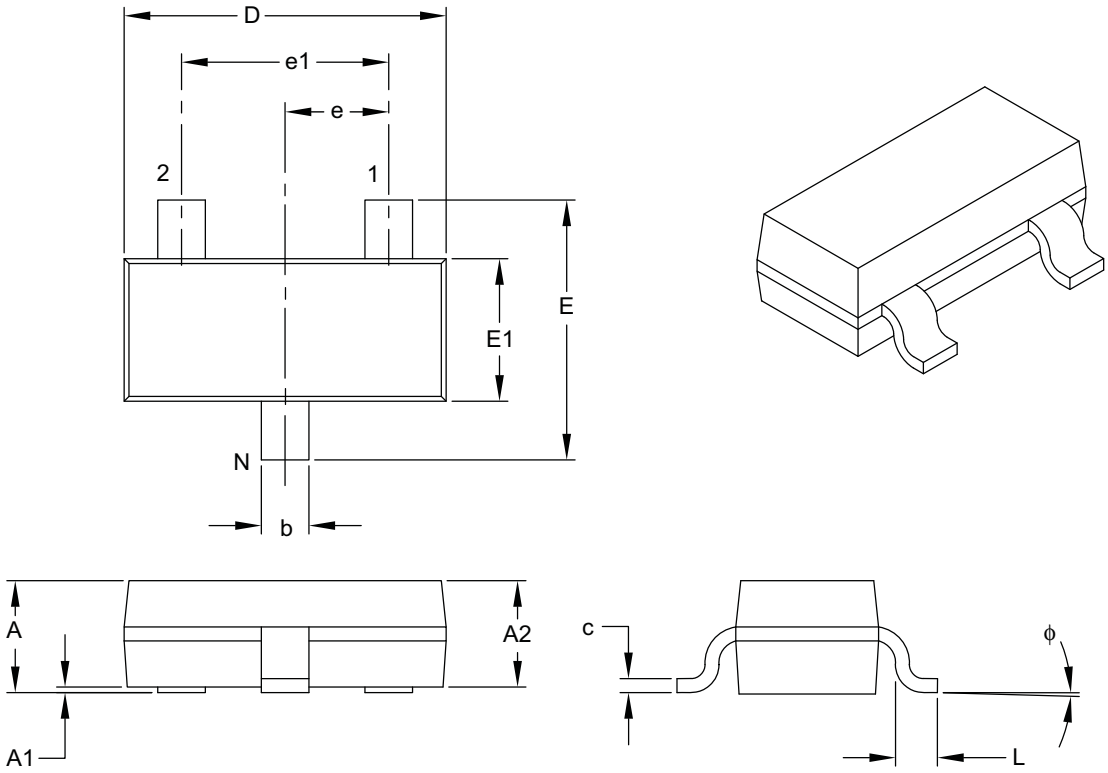

Units		MILLIMETERS		
Dimension Limits		MIN	NOM	MAX
Number of Pins	N		3	
Lead Pitch	e		0.95 BSC	
Outside Lead Pitch	e1		1.90 BSC	
Overall Height	A	0.89	–	1.45
Molded Package Thickness	A2	0.90	–	1.30
Standoff	A1	0.00	–	0.15
Overall Width	E	2.10	–	3.00
Molded Package Width	E1	1.20	–	1.80
Overall Length	D	2.70	–	3.10
Foot Length	L	0.15	–	0.60
Foot Angle	ϕ	0°	–	30°
Lead Thickness	c	0.09	–	0.26
Lead Width	b	0.30	–	0.51

Notes:

1. Dimensions D and E1 do not include mold flash or protrusions. Mold flash or protrusions shall not exceed 0.127 mm per side.
2. Dimensioning and tolerancing per ASME Y14.5M.

BSC: Basic Dimension. Theoretically exact value shown without tolerances.

Microchip Technology Drawing C04-130B

3-Lead Plastic Small Outline Transistor Header (MB) [SOT-89]

Note: For the most current package drawings, please see the Microchip Packaging Specification located at http://www.microchip.com/packaging

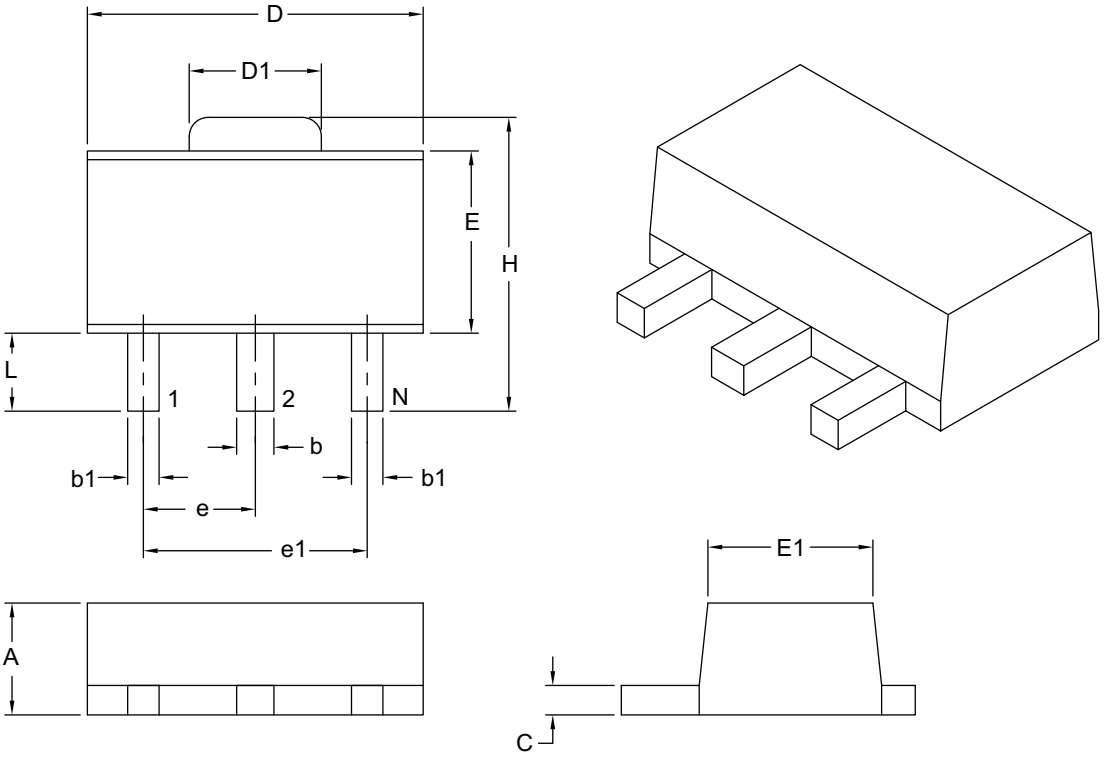

Units		MILLIMETERS	
Dimension Limits		MIN	MAX
Number of Leads	N	3	
Pitch	e	1.50 BSC	
Outside Lead Pitch	e1	3.00 BSC	
Overall Height	A	1.40	1.60
Overall Width	H	3.94	4.25
Molded Package Width at Base	E	2.29	2.60
Molded Package Width at Top	E1	2.13	2.29
Overall Length	D	4.39	4.60
Tab Length	D1	1.40	1.83
Foot Length	L	0.79	1.20
Lead Thickness	c	0.35	0.44
Lead 2 Width	b	0.41	0.56
Leads 1 & 3 Width	b1	0.36	0.48

Notes:

1. Dimensions D and E do not include mold flash or protrusions. Mold flash or protrusions shall not exceed 0.127 mm per side.
2. Dimensioning and tolerancing per ASME Y14.5M.

BSC: Basic Dimension. Theoretically exact value shown without tolerances.

Microchip Technology Drawing C04-029B

© 2007 Microchip Technology Inc.

3-Lead Plastic Transistor Outline (TO) [TO-92]

Note: For the most current package drawings, please see the Microchip Packaging Specification located at http://www.microchip.com/packaging

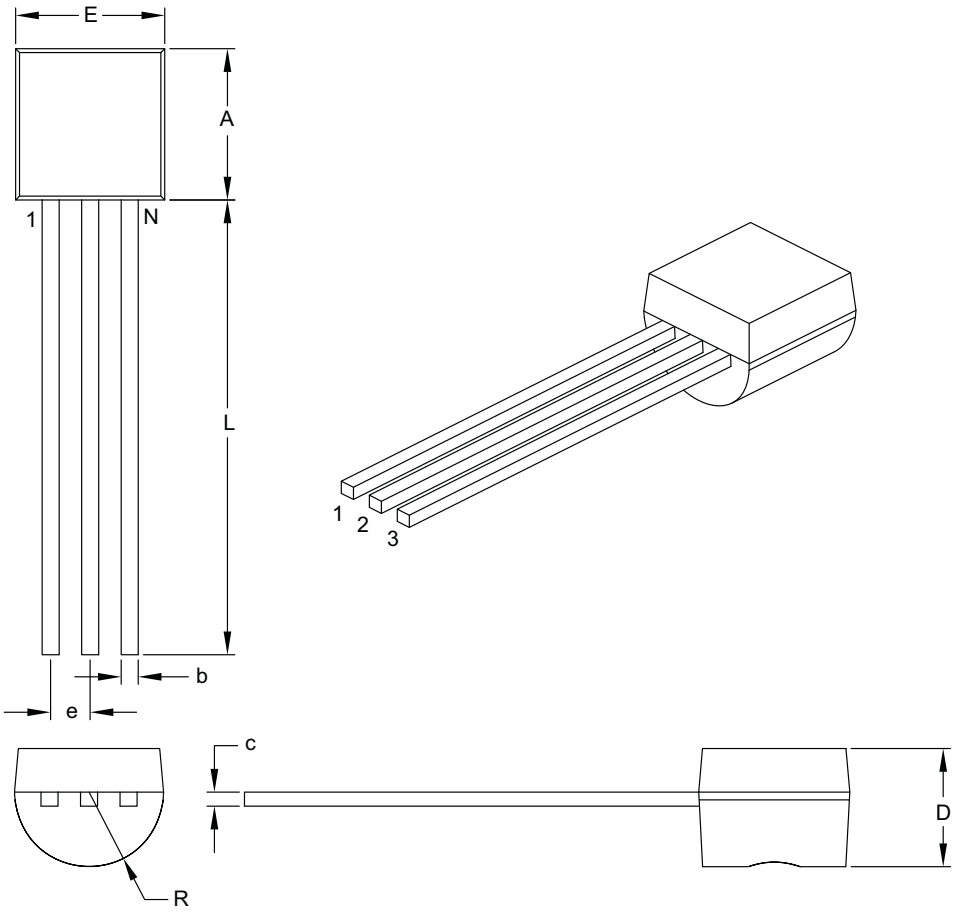

Units		INCHES	
Dimension Limits		MIN	MAX
Number of Pins	N	3	
Pitch	e	.050 BSC	
Bottom to Package Flat	D	.125	.165
Overall Width	E	.175	.205
Overall Length	A	.170	.210
Molded Package Radius	R	.080	.105
Tip to Seating Plane	L	.500	–
Lead Thickness	c	.014	.021
Lead Width	b	.014	.022

Notes:

1. Dimensions A and E do not include mold flash or protrusions. Mold flash or protrusions shall not exceed .005" per side.
2. Dimensioning and tolerancing per ASME Y14.5M.

BSC: Basic Dimension. Theoretically exact value shown without tolerances.

Microchip Technology Drawing C04-101B

NOTES:

© 2007 Microchip Technology Inc.

APPENDIX A: REVISION HISTORY

Revisions C (February 2007)

- Updated Packaging Information

Revision B (September 2006)

- Numerous changes to Section 1.0. Electrical Characteristics
- Added disclaimer to package outline drawings.

Revision A (February 2006)

- Original Release of this Document.

NOTES:

© 2007 Microchip Technology Inc.

PRODUCT IDENTIFICATION SYSTEM

To order or obtain information, e.g., on pricing or delivery, refer to the factory or the listed sales office.

PART NO.	X-	XX	X	X	X	/XX
Device	Tape and Reel	Output Voltage	Feature Code	Tolerance	Temp.	Package

Device:	MCP1701A: 2 µA Low-Dropout Positive Voltage Regulator	
Tape and Reel:	T	= Tape and Reel
Output Voltage:	18 25 30 33 50	= 1.8V “Standard” = 2.5V “Standard” = 3.0V “Standard” = 3.3V “Standard” = 5.0V “Standard” *Contact factory for other output voltage options.
Extra Feature Code:	0	= Fixed
Tolerance:	2	= 2.0% (Standard)
Temperature:	I	= -40°C to +85°C
Package Type:	CB MB TO	= 3-Pin SOT-23A (equivalent to EIAJ SC-59) = 3-Pin SOT-89 = 3-Pin TO-92

Examples:

a) MCP1701AT-1802I/CB: 1.8V LDO Positive Voltage Regulator, SOT-23A-3 pkg.

b) MCP1701AT-1802I/MB: 1.8V LDO Positive Voltage Regulator, SOT89-3 pkg.

c) MCP1701A-1802I/TO: 1.8V LDO Positive Voltage Regulator, TO-92 pkg.

d) MCP1701AT-2502I/CB: 2.5V LDO Positive Voltage Regulator, SOT-23A-3 pkg.

e) MCP1701A-2502I/TO: 2.5V LDO Positive Voltage Regulator, TO-92 pkg.

f) MCP1701AT-3002I/CB: 3.0V LDO Positive Voltage Regulator, SOT-23A-3 pkg.

g) MCP1701AT-3002I/MB: 3.0V LDO Positive Voltage Regulator, SOT89-3 pkg.

h) MCP1701A-3002I/TO: 3.0V LDO Positive Voltage Regulator, TO-92 pkg.

i) MCP1701AT-3302I/CB: 3.3V LDO Positive Voltage Regulator, SOT-23A-3 pkg.

j) MCP1701AT-3302I/MB: 3.3V LDO Positive Voltage Regulator, SOT89-3 pkg.

k) MCP1701AT-5002I/CB: 5.0V LDO Positive Voltage Regulator, SOT-23A-3 pkg.

l) MCP1701AT-5002I/MB: 5.0V LDO Positive Voltage Regulator, SOT89-3 pkg.

m) MCP1701A-5002I/TO: 5.0V LDO Positive Voltage Regulator, TO-92 pkg.

NOTES:

© 2007 Microchip Technology Inc.

Note the following details of the code protection feature on Microchip devices:

- Microchip products meet the specification contained in their particular Microchip Data Sheet.
- Microchip believes that its family of products is one of the most secure families of its kind on the market today, when used in the intended manner and under normal conditions.
- There are dishonest and possibly illegal methods used to breach the code protection feature. All of these methods, to our knowledge, require using the Microchip products in a manner outside the operating specifications contained in Microchip's Data Sheets. Most likely, the person doing so is engaged in theft of intellectual property.
- Microchip is willing to work with the customer who is concerned about the integrity of their code.
- Neither Microchip nor any other semiconductor manufacturer can guarantee the security of their code. Code protection does not mean that we are guaranteeing the product as "unbreakable."

Code protection is constantly evolving. We at Microchip are committed to continuously improving the code protection features of our products. Attempts to break Microchip's code protection feature may be a violation of the Digital Millennium Copyright Act. If such acts allow unauthorized access to your software or other copyrighted work, you may have a right to sue for relief under that Act.

Information contained in this publication regarding device applications and the like is provided only for your convenience and may be superseded by updates. It is your responsibility to ensure that your application meets with your specifications. MICROCHIP MAKES NO REPRESENTATIONS OR WARRANTIES OF ANY KIND WHETHER EXPRESS OR IMPLIED, WRITTEN OR ORAL, STATUTORY OR OTHERWISE, RELATED TO THE INFORMATION, INCLUDING BUT NOT LIMITED TO ITS CONDITION, QUALITY, PERFORMANCE, MERCHANTABILITY OR FITNESS FOR PURPOSE**.** Microchip disclaims all liability arising from this information and its use. Use of Microchip devices in life support and/or safety applications is entirely at the buyer's risk, and the buyer agrees to defend, indemnify and hold harmless Microchip from any and all damages, claims, suits, or expenses resulting from such use. No licenses are conveyed, implicitly or otherwise, under any Microchip intellectual property rights.

Trademarks

The Microchip name and logo, the Microchip logo, Accuron, dsPIC, KEELOQ, KEELOQ logo, microID, MPLAB, PIC, PICmicro, PICSTART, PRO MATE, PowerSmart, rfPIC, and SmartShunt are registered trademarks of Microchip Technology Incorporated in the U.S.A. and other countries.

AmpLab, FilterLab, Linear Active Thermistor, Migratable Memory, MXDEV, MXLAB, PS logo, SEEVAL, SmartSensor and The Embedded Control Solutions Company are registered trademarks of Microchip Technology Incorporated in the U.S.A.

Analog-for-the-Digital Age, Application Maestro, CodeGuard, dsPICDEM, dsPICDEM.net, dsPICworks, ECAN, ECONOMONITOR, FanSense, FlexROM, fuzzyLAB, In-Circuit Serial Programming, ICSP, ICEPIC, Mindi, MiWi, MPASM, MPLAB Certified logo, MPLIB, MPLINK, PICkit, PICDEM, PICDEM.net, PICLAB, PICtail, PowerCal, PowerInfo, PowerMate, PowerTool, REAL ICE, rfLAB, rfPICDEM, Select Mode, Smart Serial, SmartTel, Total Endurance, UNI/O, WiperLock and ZENA are trademarks of Microchip Technology Incorporated in the U.S.A. and other countries.

SQTP is a service mark of Microchip Technology Incorporated in the U.S.A.

All other trademarks mentioned herein are property of their respective companies.

© 2007, Microchip Technology Incorporated, Printed in the U.S.A., All Rights Reserved.

Printed on recycled paper.

QUALITY MANAGEMENT SYSTEM
CERTIFIED BY DNV
ISO/TS 16949:2002

Microchip received ISO/TS-16949:2002 certification for its worldwide headquarters, design and wafer fabrication facilities in Chandler and Tempe, Arizona, Gresham, Oregon and Mountain View, California. The Company's quality system processes and procedures are for its PIC® MCUs and dsPIC® DSCs, KEELOQ® code hopping devices, Serial EEPROMs, microperipherals, nonvolatile memory and analog products. In addition, Microchip's quality system for the design and manufacture of development systems is ISO 9001:2000 certified.

WORLDWIDE SALES AND SERVICE

AMERICAS

Corporate Office
2355 West Chandler Blvd.
Chandler, AZ 85224-6199
Tel: 480-792-7200
Fax: 480-792-7277
Technical Support:
http://support.microchip.com
Web Address:
www.microchip.com

Atlanta
Duluth, GA
Tel: 678-957-9614
Fax: 678-957-1455

Boston
Westborough, MA
Tel: 774-760-0087
Fax: 774-760-0088

Chicago
Itasca, IL
Tel: 630-285-0071
Fax: 630-285-0075

Dallas
Addison, TX
Tel: 972-818-7423
Fax: 972-818-2924

Detroit
Farmington Hills, MI
Tel: 248-538-2250
Fax: 248-538-2260

Kokomo
Kokomo, IN
Tel: 765-864-8360
Fax: 765-864-8387

Los Angeles
Mission Viejo, CA
Tel: 949-462-9523
Fax: 949-462-9608

Santa Clara
Santa Clara, CA
Tel: 408-961-6444
Fax: 408-961-6445

Toronto
Mississauga, Ontario,
Canada
Tel: 905-673-0699
Fax: 905-673-6509

ASIA/PACIFIC

Asia Pacific Office
Suites 3707-14, 37th Floor
Tower 6, The Gateway
Habour City, Kowloon
Hong Kong
Tel: 852-2401-1200
Fax: 852-2401-3431

Australia - Sydney
Tel: 61-2-9868-6733
Fax: 61-2-9868-6755

China - Beijing
Tel: 86-10-8528-2100
Fax: 86-10-8528-2104

China - Chengdu
Tel: 86-28-8665-5511
Fax: 86-28-8665-7889

China - Fuzhou
Tel: 86-591-8750-3506
Fax: 86-591-8750-3521

China - Hong Kong SAR
Tel: 852-2401-1200
Fax: 852-2401-3431

China - Qingdao
Tel: 86-532-8502-7355
Fax: 86-532-8502-7205

China - Shanghai
Tel: 86-21-5407-5533
Fax: 86-21-5407-5066

China - Shenyang
Tel: 86-24-2334-2829
Fax: 86-24-2334-2393

China - Shenzhen
Tel: 86-755-8203-2660
Fax: 86-755-8203-1760

China - Shunde
Tel: 86-757-2839-5507
Fax: 86-757-2839-5571

China - Wuhan
Tel: 86-27-5980-5300
Fax: 86-27-5980-5118

China - Xian
Tel: 86-29-8833-7250
Fax: 86-29-8833-7256

ASIA/PACIFIC

India - Bangalore
Tel: 91-80-4182-8400
Fax: 91-80-4182-8422

India - New Delhi
Tel: 91-11-4160-8631
Fax: 91-11-4160-8632

India - Pune
Tel: 91-20-2566-1512
Fax: 91-20-2566-1513

Japan - Yokohama
Tel: 81-45-471- 6166
Fax: 81-45-471-6122

Korea - Gumi
Tel: 82-54-473-4301
Fax: 82-54-473-4302

Korea - Seoul
Tel: 82-2-554-7200
Fax: 82-2-558-5932 or
82-2-558-5934

Malaysia - Penang
Tel: 60-4-646-8870
Fax: 60-4-646-5086

Philippines - Manila
Tel: 63-2-634-9065
Fax: 63-2-634-9069

Singapore
Tel: 65-6334-8870
Fax: 65-6334-8850

Taiwan - Hsin Chu
Tel: 886-3-572-9526
Fax: 886-3-572-6459

Taiwan - Kaohsiung
Tel: 886-7-536-4818
Fax: 886-7-536-4803

Taiwan - Taipei
Tel: 886-2-2500-6610
Fax: 886-2-2508-0102

Thailand - Bangkok
Tel: 66-2-694-1351
Fax: 66-2-694-1350

EUROPE

Austria - Wels
Tel: 43-7242-2244-39
Fax: 43-7242-2244-393

Denmark - Copenhagen
Tel: 45-4450-2828
Fax: 45-4485-2829

France - Paris
Tel: 33-1-69-53-63-20
Fax: 33-1-69-30-90-79

Germany - Munich
Tel: 49-89-627-144-0
Fax: 49-89-627-144-44

Italy - Milan
Tel: 39-0331-742611
Fax: 39-0331-466781

Netherlands - Drunen
Tel: 31-416-690399
Fax: 31-416-690340

Spain - Madrid
Tel: 34-91-708-08-90
Fax: 34-91-708-08-91

UK - Wokingham
Tel: 44-118-921-5869
Fax: 44-118-921-5820

12/08/06

© 2007 Microchip Technology Inc.

ENTEGRECİ

Bu belge www.entegreci.com üzerinden sunulmaktadır.

Elektronik komponent tedarikinde Entegreci

Entegreci, Eskişehir merkezli, Türkiye geneline satış yapan bir elektronik komponent mağazasıdır. Entegreler (IC), mikrodenetleyiciler, transistörler, diyotlar, pasif elemanlar, konnektörler, modüller ve geliştirme kartları tek adetten seri üretim adetlerine kadar satılır. Ürün sayfalarında güncel stok durumunu, fiyatı ve datasheet bağlantısını bulabilirsiniz.

Parça koduyla arama

Üretici parça numarasını yazın; stok ve fiyatı hemen görün.

www.entegreci.com

Ürün kategorileri

Entegreden kapasitöre tüm elektronik komponent kategorileri.

Kategorilere göz atın

Üreticiler

Aradığınız üreticinin ürünlerini tek sayfada inceleyin.

Üreticileri görün

Toplu alım ve teklif

Listede olmayan ya da yüksek adetli parçalar için teklif isteyin.

Teklif isteyin

www.entegreci.com | **destek@entegreci.com** | **0850 305 90 34**

Entegreci is an online electronic components store based in Türkiye. Search by manufacturer part number to see stock, prices and datasheets for integrated circuits, microcontrollers, transistors, passive components and connectors, or request a quote for parts that are not listed.

Bu sayfa Entegreci tarafından eklenmiştir. Belgenin önceki sayfaları asıl yayıncısına aittir ve içeriği değiştirilmemiştir; en güncel sürüm için belgenin yayıncısına başvurun.