6MBP50XTC065-50

IGBT Module(X series)
650V / 50A / IPM

■ Features

Low-side IGBTs are separate emitter type
Short circuit protection
Temperature sensor output function
Overheating protection
Under voltage protection
Fault signal output function
Input interface:TTL(3.3V/5V)Active high logic

■ Typical appearance

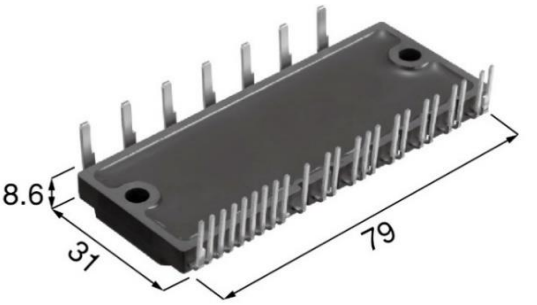

■Applications

AC 100~240V three phase inverter drive for small power AC motor drives(such as compressor motor drive for air conditioner,compressor motor drive for heat pump applications,ventilator motor drive)

■ Terminal assign and Internal circuit

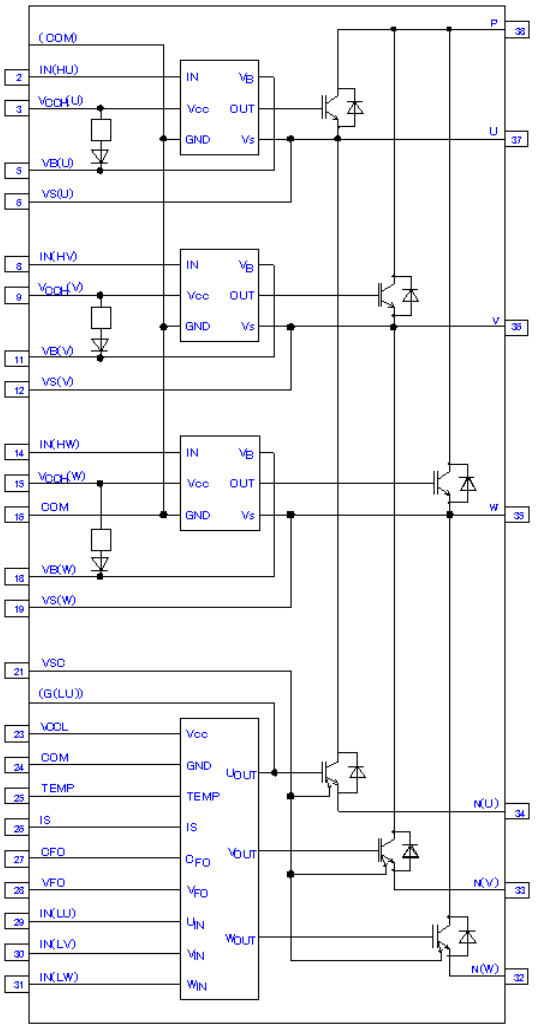

Pin No.	Pin Name	Pin Description
2	IN(HU)	Signal input for high side U-phase
3	VCCH(U)	Control supply for high side U-phase
5	VB(U)	High-side bias voltage for U-phase IGBT driving
6	VS(U)	High-side U-phase drive supply GND
8	IN(HV)	Signal input for high side V-phase
9	VCCH(V)	Control supply for high side V-phase
11	VB(V)	High-side bias voltage for V-phase IGBT driving
12	VS(V)	High-side V-phase drive supply GND
14	IN(HW)	Signal input for high side W-phase
15	VCCH(W)	Control supply for high side W-phase
16	COM	Common supply ground
18	VB(W)	High-side bias voltage for W-phase IGBT driving
19	VS(W)	High-side W-phase drive supply GND
21	VSC	Sense current detecting for low side
23	VCCL	Low-side control supply
24	COM	Common supply ground
25	TEMP	Temperature sensor output
26	IS	Over current sensing voltage input
27	CFO	Capacitor for fault output width selection
28	VFO	Fault output
29	IN(LU)	Signal input for low side U-phase
30	IN(LV)	Signal input for low side V-phase
31	IN(LW)	Signal input for low side W-phase
32	N(W)	Negative bus voltage input for W-phase
33	N(V)	Negative bus voltage input for V-phase
34	N(U)	Negative bus voltage input for U-phase
35	W	Motor W-phase output
36	V	Motor V-phase output
37	U	Motor U-phase output
38	P	Positive bus voltage input

■ Absolute Maximum Ratings(T_{vj}=25℃,T_c=25℃,V_{CC}=15V,$V_{B(*)}$=15V unless otherwise specified)

Items		Symbol	Characteristics	Unit	Remarks
Inverter block	DC Bus Voltage	$V_{DC\ (terminal)}$	450	V	Note *1, See Fig.2-2
	Bus Voltage (Surge)	$V_{DC(Surge,terminal)}$	500	V	Note *1, See Fig.2-2
	Collector-Emitter Voltage	$V_{CE(chip)}$	650	V	Note *1, See Fig.2-2
	Collector Current	I_C	50	A	Note *2
	Peak Collector Current	I_{CP}	100	A	V_{CC}≧15V, $V_{B(*)}$≧15V Note *2, *3, *4
	Forward current	I_F	50	A	Note *2
	Peak Forward current	I_{FP}	100	A	Note *2
	Collector Power Dissipation	P_{D_IGBT}	132	W	per single IGBT T_c=25°C
	FWD power Dissipation	P_{D_FWD}	89	W	per single FWD T_c=25°C
	Self operation "DC Bus voltage" of circuit protection between upper-arm and lower-arm	$V_{DC(sc)}$	400	V	V_{CC}=$V_{B(*)}$=13.5~16.5V T_{vj}=125°C, non-repetitive less than 3us See Fig.2-2
	Virtual Junction Temperature	T_{vj}	175	°C	Note *8
	Operating Virtual Junction Temperature	T_{vjop}	-40 ~ +150	°C	
Control circuit block	High-side Supply Voltage	$V_{CCH(U)}$ $V_{CCH(V)}$ $V_{CCH(W)}$	-0.5 ~ 20	V	Applied between VCCH(U)-COM, VCCH(V)-COM, VCCH(W)-COM
	Low-side Supply Voltage	V_{CCL}	-0.5 ~ 20	V	Applied between VCCL-COM
	High-side Bias Absolute Voltage	$V_{VB(U)-COM}$ $V_{VB(V)-COM}$ $V_{VB(W)-COM}$	-0.5 ~ 670	V	Applied between VB(U)-COM, VB(V)-COM, VB(W)-COM
	High-side Bias Voltage for IGBT gate driving	$V_{B(U)}$ $V_{B(V)}$ $V_{B(W)}$	-0.5 ~ 20	V	Note *4
	High-side Bias offset Voltage	V_U V_V V_W	-5 ~ 650	V	Applied between U-COM, V-COM, W-COM Note *5
	Input Signal Voltage	V_{IN}	-0.5 ~ V_{CCH}+0.5 -0.5 ~ V_{CCL}+0.5	V	Note *6
	Input Signal Current	I_{IN}	3	mA	sink current
	Fault Signal Voltage	V_{FO}	-0.5 ~ V_{CCL}+0.5	V	Applied between VFO-COM
	Fault Signal Current	I_{FO}	1	mA	sink current
	CFO Signal Voltage	V_{CFO}	-0.5 ~ 5.0	V	Between CFO-COM Note *9
	CFO Signal Current	I_{CFO}	-0.05 / 3	mA	source / sink current
	Over Current sensing Input Voltage	V_{IS}	-0.5 ~ V_{CCL}+0.5	V	Applied between IS-COM
	TEMP Signal Voltage	V_{TEMP}	-0.5 ~ 5.0	V	Between TEMP-COM Note *9
	TEMP Signal Current	I_{TEMP}	-0.05 / 3	mA	source / sink current
	VSC Signal Voltage	V_{VSC}	-0.5 ~ V_{CCL}+0.5	V	Between VSC-COM Note *9
	VSC Signal Current	I_{VSC}	-20	mA	Source current
	Virtual Junction Temperature	T_{vj}	150	°C	
Operating Case Temperature		T_c	-40 ~ +125	°C	See Fig.1-2
Storage Temperature		T_{stg}	-40 ~ +125	°C	
Isolation Voltage		V_{isol}	AC 2500	Vrms	Sine wave,60Hz t=1min , Note *7

Note

*1 : V_{DC} is applied between P-N(U),P-N(V),P-N(W).
V_{CE} is Collector-Emitter voltage of internal IGBT chip.
*2 : Pulse width and duty were limited by T_{vj}max.
*3 : V_{CC} is applied between VCCH-COM,VCCL-COM.
*4 : $V_{B(*)}$ is applied between VB(U)-VS(U),VB(V)-VS(V), VB(W)-VS(W).
*5 : Over 13.0V applied between VB(U)-VS(U),VB(V)-VS(V), VB(W)-VS(W). This IPM module might make incorrect response if the high-side bias offset voltage is less than -5V.
*6 : Applied between IN(HU)-COM,IN(HV)-COM,IN(HW)-COM,IN(LU)-COM,IN(LV)-COM,IN(LW)-COM.
*7 : Applied between shorted all terminal and IMS (Insulated Metal Substrate).
*8 : The maximum temperature during continuous operation is T_{vj}=150°C.
The operating conditions have to be decided so that the temperature is below T_{vj}=150°C.
Continuous operation at over T_{vj}=150°C may result in degradation of product lifetime such as power cycling capability.
*9 : CFO, TEMP, VSC are output terminals. Never applied power source.

Electrical Characteristics

Inverter block

(T_{vj}=25°C, T_c=25°C,V_{CC}=15V,$V_{B(*)}$=15V,V_{IN}=0V,V_{IS}=0V,$V_{N(*)-COM}$=0V unless otherwise specified)

Description	Symbol	Conditions		min.	typ.	max.	Unit
Zero gate Voltage Collector current	I_{CE}	V_{CE} = 650V	T_{vj}=25°C	-	-	1	mA
			T_{vj}=125°C	-	-	10	mA
Collector-Emitter saturation Voltage	$V_{CE(sat)}$ (terminal)	I_C=50A V_{IN}=5V Note *4	T_{vj}=25°C	-	1.30	1.65	V
			T_{vj}=125°C	-	1.45	1.80	
Forward voltage	V_F	I_F=50A	T_{vj}=25°C	-	1.55	2.05	V
			T_{vj}=125°C	-	1.60	-	
Turn-on time	t_{on}	V_{DC} = 300V I_C = 50A T_{vj} = 125°C V_{IN}=0V <-> 5V See Fig.2-1 Note *4		1.20	1.70	2.50	µs
Turn-on delay time	$t_{d(on)}$			-	1.60	-	
Turn-on rise time	t_r			-	0.15	-	
V_{CE}-I_C Cross time of turn-on	$t_{c(on)}$			-	0.35	0.70	
Turn-off time	t_{off}			-	1.85	2.50	
Turn-off delay time	$t_{d(off)}$			-	1.75	-	
Turn-off fall time	t_f			-	0.15	-	
V_{CE}-I_C Cross time of turn-off	$t_{c(off)}$			-	0.35	0.70	
Reverse Recovery time	t_{rr}			-	0.25	-	

Control circuit block

(T_{vj}=25°C, T_c=25°C, V_{CC}=15V, $V_{B(*)}$=15V, V_{IN}=0V, V_{IS}=0V, $V_{N(*)-COM}$ =0V unless otherwise specified)

Description	Symbol	Conditions		min.	typ.	max.	Unit
Circuit current of Low-side	I_{CCL}	V_{CCL}=15V	V_{IN}=5V	-	0.7	1.1	mA
			V_{IN}=0V	-	0.7	1.1	
Circuit current of High-side (per one unit)	I_{CCH}	$V_{CCH(U)}$=15V, $V_{CCH(V)}$=15V, $V_{CCH(W)}$=15V	V_{IN}=5V	-	1.2	1.9	mA
			V_{IN}=0V	-	1.2	1.9	
Circuit current of Bootstrap circuit (per one unit)	I_{CCHB}	$V_{B(U)}$=15V, $V_{B(V)}$=15V, $V_{B(W)}$=15V	V_{IN}=5V	-	-	0.20	mA
			V_{IN}=0V	-	-	0.20	
Input Signal threshold voltage	$V_{th(on)}$	Note *10 $PW \geq 1.5\mu s$		1.6	2.1	2.6	V
	$V_{th(off)}$			0.8	1.3	1.8	V
Input Signal threshold hysteresis voltage	$V_{th(hys)}$			0.35	0.8	-	V
Operational input pulse width of turn-on	$t_{IN(on)}$	V_{IN}=0V to 5V rise up, Note *6,Note *10		1.5	-	-	μs
Operational input pulse width of turn-off	$t_{IN(off)}$	V_{IN}=5V to 0V fall down, Note *6,Note *10		0.8	-	-	μs
Input current	I_{IN}	V_{IN}=5V Note *6		0.7	1.0	1.5	mA
Input pull-down resistance	R_{IN}	Note *6		3.3	5.0	7.2	kΩ
Fault Output Voltage	$V_{FO(H)}$	V_{IS}=0V, V_{FO} terminal pull up to 5V by 10kΩ		4.9	-	-	V
	$V_{FO(L)}$	V_{IS}=1V, I_{FO}=1mA		-	-	0.95	V
Fault Output pulse width	t_{FO}	C_{FO}=22nF Note *12,See Fig2-3,2-4		1.6	2.4	-	ms
Over Current Protection Voltage Level	$V_{IS(ref)}$	V_{CC}=15V Note *3, *11, *12 See Fig.2-3		0.455	0.48	0.505	V
Over Current Protection Delay time	$t_{d(IS)}$			0.6	1.25	1.9	μs
Over current trip level	I_{oc}	R_{SC} =40.2Ω(±1%), No shunt resistor connecting to N(U),N(V),N(W) See Fig.1-1		85	-	-	A
Output Voltage of temperature sensor	$V_{(temp)}$	Note *13	$T_{vj(LVIC)}$=90°C	2.63	2.77	2.91	V
			$T_{vj(LVIC)}$=25°C	0.88	1.13	1.39	V
Pull down Resistance of TEMP terminal	$R_{(temp)}$	Note *14		5	-	-	kΩ
LVIC Overheating protection	T_{OH}	Note *11, *12, *13 See Fig.2-7		136	143	150	℃
T_{OH} Hysteresis	$T_{OH(hys)}$			4	10	20	℃

Control circuit block (continued)

(T_{vj}=25°C, T_c=25°C, V_{CC}=15V, $V_{B(*)}$=15V, V_{IN}=0V, V_{IS}=0V, $V_{N(*)-COM}$ =0V unless otherwise specified)

Description	Symbol	Conditions	min.	typ.	max.	Unit
V_{CC} Under Voltage Trip Level of Low-side	$V_{CCL(OFF)}$	T_{vj}<150°C See Fig.2-4 Note *12	10.3	-	12.5	V
V_{CC} Under Voltage Reset Level of Low-side	$V_{CCL(ON)}$		10.8	-	13.0	V
V_{CC} Under Voltage hysteresis	$V_{CCL(hys)}$		-	0.5	-	V
V_{CC} Under Voltage Trip Level of High-side	$V_{CCH(OFF)}$	T_{vj}<150°C See Fig.2-5	8.3	-	10.3	V
V_{CC} Under Voltage Reset Level of High-side	$V_{CCH(ON)}$		8.8	-	10.8	V
V_{CC} Under Voltage hysteresis	$V_{CCH(hys)}$		-	0.5	-	V
V_B Under Voltage Trip Level	$V_{B(OFF)}$	T_{vj}<150°C See Fig.2-6	10.0	-	12.0	V
V_B Under Voltage Reset Level	$V_{B(ON)}$		10.5	-	12.5	V
V_B Under Voltage hysteresis	$V_{B(hys)}$		-	0.5	-	V
Forward voltage of Bootstrap diode	$V_{F(BSD)}$	T_{vj}=25°C $I_{F(BSD)}$=10mA	0.5	0.9	1.3	V
Built-in limiting resistance	$R_{(BSD)}$	T_{vj}=25°C	16	20	24	Ω

Fig.1-1: Over current protection circuit

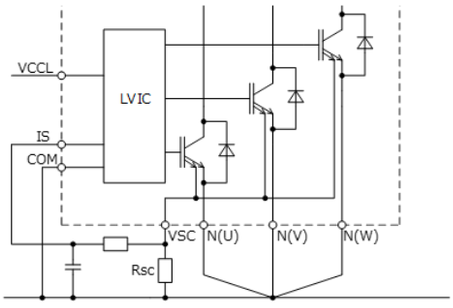

Note

*10 : This IPM module might make incorrect response if the input signal pulse width is less than $t_{IN(on)}$ and $t_{IN(off)}$.

*11 : "Over current protection" is functioning only for the low-side arms.

*12 : Fault signal is asserted corresponding to an "Over-current protection" or an "Under-voltage protection" at V_{CCL}.
Under the condition of "Over-current protection" or "Under-voltage protection", the fault signal is asserted continuously while these conditions are continuing.
However, the minimum fault output pulse width is t_{FO}(min.) even if very short failure condition (which is less than t_{FO}(min.)) is triggered. The fault output pulse-width t_{FO} depends on the capacitance value of C_{FO}. (C_{FO}(typ.) = t_{FO} x (9.1 x 10^{-6}) [F])

*13 : Fig.1-2 shows the measurement position of temperature.

*14 : It is recommended to insert pull down resister for getting linear output characteristics at low temperature below room temperature.

Thermal Characteristics (T_c=25°C)

Description	Symbol	min.	typ.	max.	Unit
Junction to Case Thermal Resistance (per single IGBT) Note *15	$R_{th(j-c)_IGBT}$	-	-	0.95	°C/W
Junction to Case Thermal Resistance (per single Diode) Note *15	$R_{th(j-c)_FWD}$	-	-	1.40	°C/W

Note

*15 : Thermal compound with good thermal conductivity should be applied evenly with about +100μm~+200μm on the contacting surface of this device and heat-sink.

Mechanical Characteristics (T_c=25°C)

Description	Symbol	Conditions	min.	typ.	max.	Unit
Mounting torque of screws	M_S	Mounting screw : M4	0.98	1.18	1.47	Nm
Heat-sink side flatness	-	The AL-IMS part : See (A1),(A2) of Fig.1-3.	-50	-	100	μm
Weight	-	-	-	37	-	g
Resistance to soldering heat	-	Solder temp : 260±5°C Immersion time : 10±1sec Solder alloy : Sn-Ag-Cu type	-	-	1	time

Fig.1-2 :
The measurement position of temperature

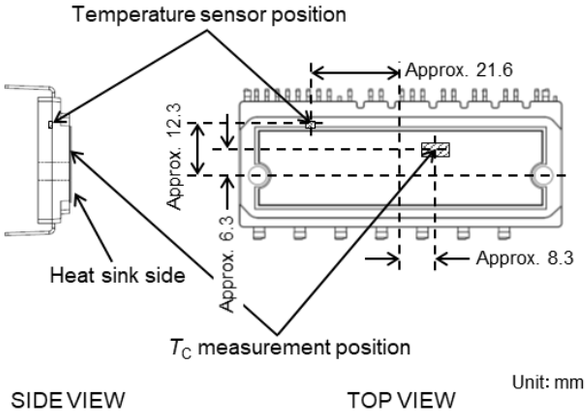

Fig.1-3 :
The measurement position of heat sink flatness

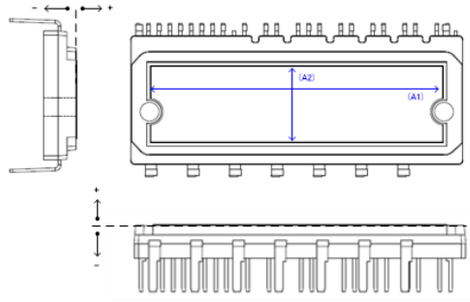

Note

*16 : Fig.1-3 shows the measurement position of heat sink flatness.

Recommended Operation Conditions (Note*20)

Description	Symbol	min.	typ.	max.	Unit
DC Bus Voltage	V_{DC}	0	300	400	V
High-side Bias Voltage for IGBT gate driving	$V_{B(*)}$	13.0	15.0	18.5	V
High-side Supply Voltage	$V_{CCH(*)}$	13.5	15.0	16.5	V
Low-side Supply Voltage	V_{CCL}	13.5	15.0	16.5	V
Control Supply variation (Under switching Condition)	ΔV_B	-1	-	1	V/μs
	ΔV_{CC}	-1	-	1	
Input signal voltage	V_{IN}	0	-	5	V
Voltage for current sensing	V_{ISC}	0	-	5	V
Potential difference between COM and N (including surge)	V_{COM_N}	-5	-	5	V
Dead time for preventing arm-short ($T_c \leq 125°C$)	t_{DEAD}	2.2	-	-	μs
Output current (Note *17)	I_O	-	-	50	A rms
Minimum input pulse width (Note *18, *19)	$PW_{IN(on)}$	1.5	-	-	μs
	$PW_{IN(off)}$	0.8	-	-	μs
PWM Input frequency	f_{PWM}	-	-	20	kHz
Operating Virtual Junction Temperature	T_{vjop}	-30	-	150	°C
Capacitance value between CFO and COM (Note*21)	C_{FO}	1	22	-	nF

Note

*17 : V_{DC}=300V, $V_{CCH(*)}$=V_{CCL}=$V_{B(*)}$=15V, PF=0.8, Sinusoidal PWM, 3phase modulation, $T_{vj} \leq 150°C$, $T_c \leq 100°C$, f_{PWM}=5kHz, f_O=200Hz, Ks=0.9

*18 : In the pulse width of 1.5us, the loss of IGBT increases for the saturation operation. To reduce the loss of IGBT, please enlarge the pulse width more than the switching time of IGBT.

*19 : This IPM module might response according to input signal pulse even when the input signal pulse width is less than $PW_{IN(on)}$ and $PW_{IN(off)}$.

*20 : Recommended operating conditions are conditions for guaranteeing that the product operates normally. If it is used beyond this condition, operation and reliability may be adversely affected.

*21 : It is recommended to use low leakage current ceramic capacitor such as Murata Manufacturing RCER 71H series.

6MBP50XTC065-50

Package Outline dimensions (T_c=25°C)

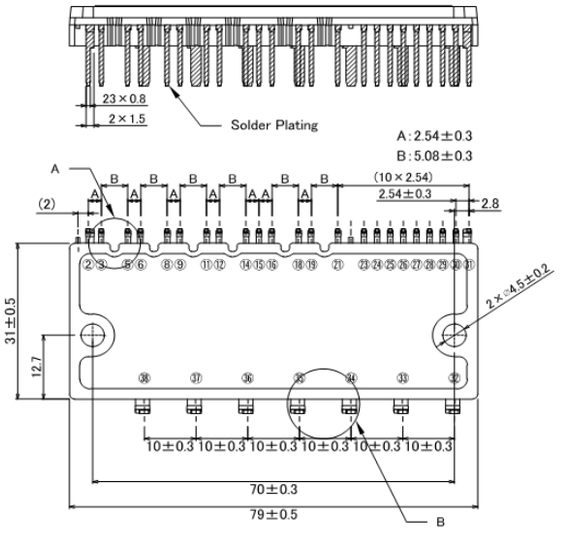

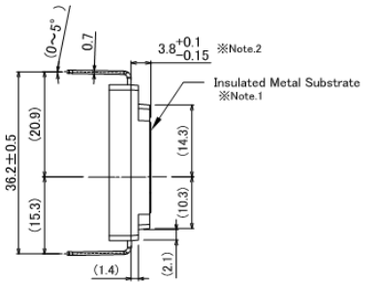

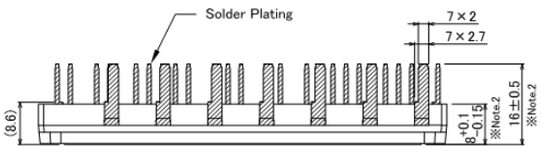

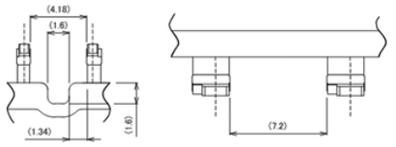

DETAIL A DETAIL B

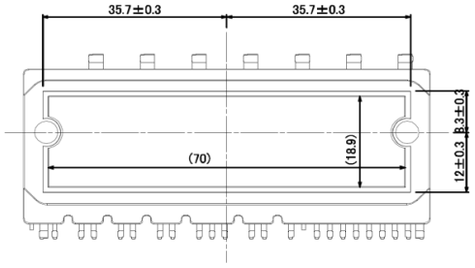

Unit:mm

Pin No.	Pin Name	Pin No.	Pin Name	Pin No.	Pin Name
2	IN(HU)	21	VSC	32	N(W)
3	VCCH(U)	23	VCCL	33	N(V)
5	VB(U)	24	COM	34	N(U)
6	VS(U)	25	TEMP	35	W
8	IN(HV)	26	IS	36	V
9	VCCH(V)	27	CFO	37	U
11	VB(V)	28	VFO	38	P
12	VS(V)	29	IN(LU)		
14	IN(HW)	30	IN(LV)		
15	VCCH(W)	31	IN(LW)		
16	COM				
18	VB(W)				
19	VS(W)				

Note.1
The IMS (Insulated Metal Substrate) is deliberately protruded to improve the thermal conductivity between IMS and heat-sink.

Note.2
Thickness from the package surface to the back side including the IMS.

Marking

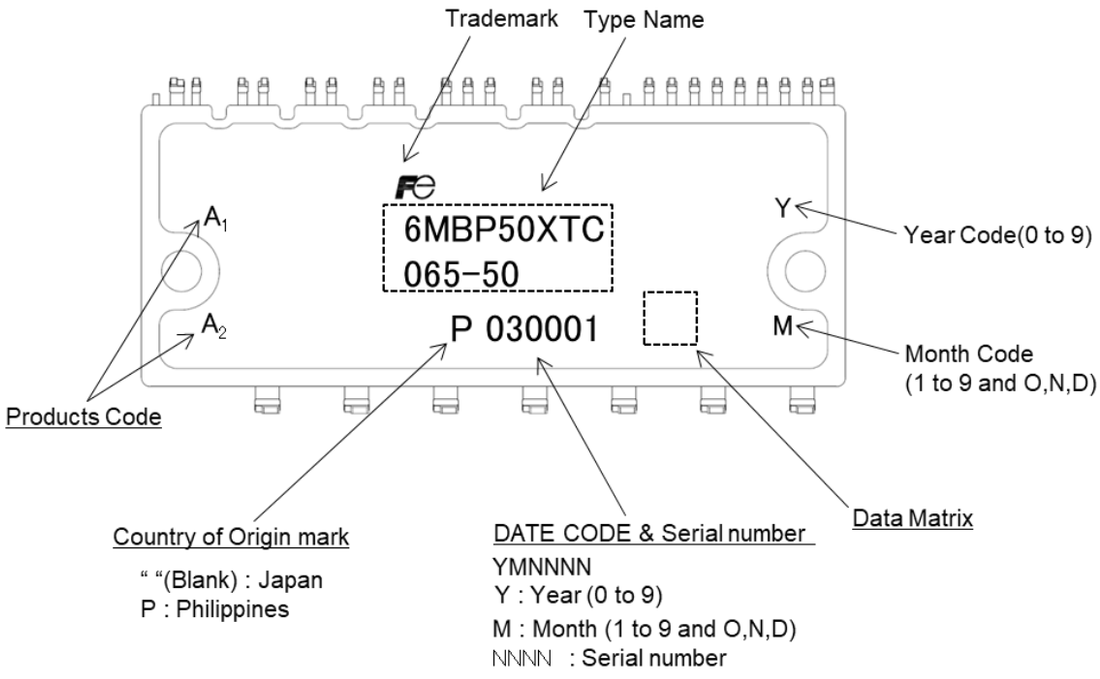

Note

Product code A_1 means current ratings , and "A" is marked.

Product code A_2 means variations , and "A" is marked.

An example of application circuit.

Fig. shows an example of an application circuit.

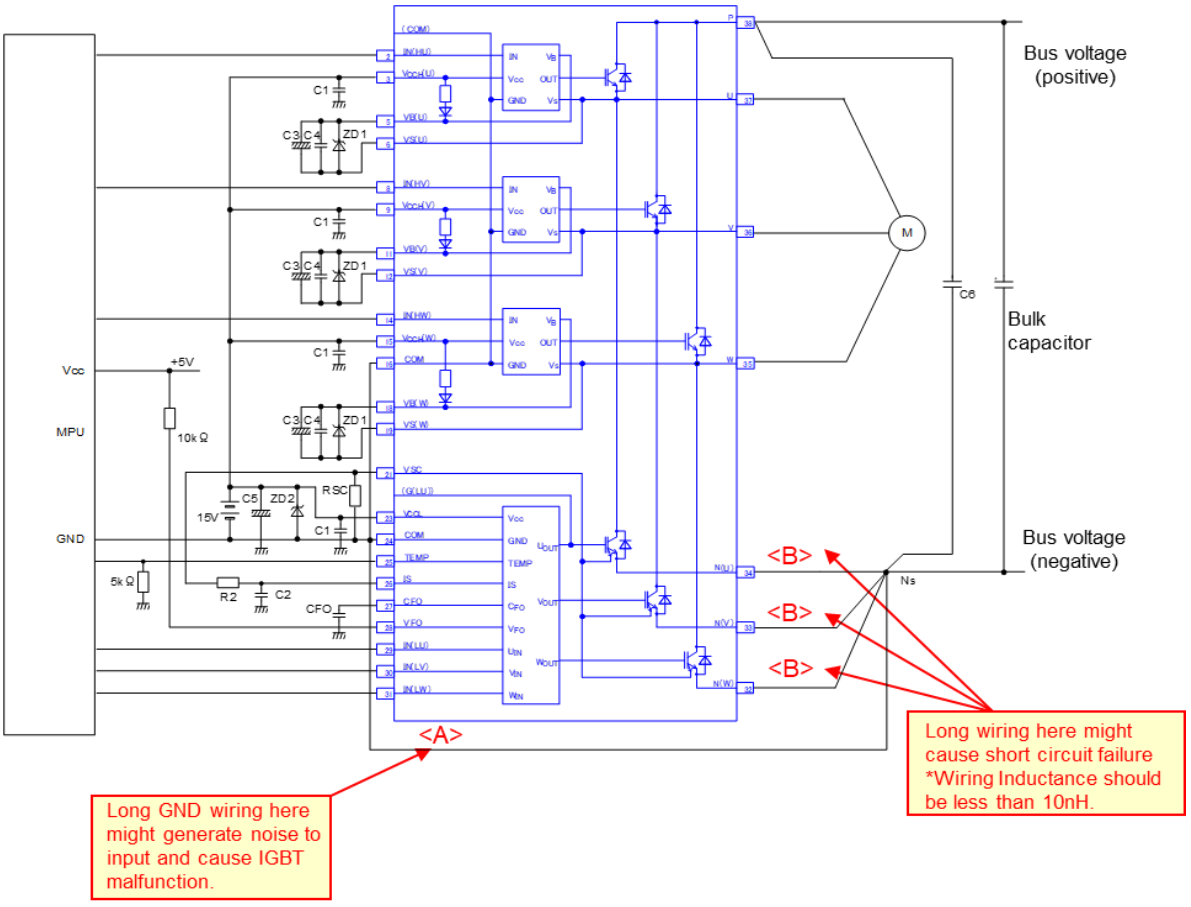

<Note>

1. Input signal for drive is High-Active. There is a pull-down resistor built in the IC input circuit. To prevent malfunction, the wiring of each input should be as short as possible. When using R-C coupling circuit, make sure the input signal level meet the turn-on and turn-off threshold voltage.
2. By the function of the HVIC, it is possible of the direct coupling to microprocessor (MPU) without any photo-coupler or pulse-transformer isolation.
3. VFO output is open drain type. It should be pulled up to the positive side of a 5V power supply by a resistor of about 10kΩ.
4. To prevent erroneous protection, the wiring of (A), (B) should be as short as possible.
5. The time constant R2-C2 of the protection circuit should be selected approximately 1.1μs.
   Over current (OC) shutdown time might vary due to the wiring pattern. Tight tolerance, temp-compensated type is recommended for R2, C2.
6. All capacitors should be mounted as close to the terminals of the IPM as possible. (C1, C4 : narrow temperature drift, higher frequency and DC bias characteristic ceramic type are recommended, and C3, C5: narrow temperature drift, higher frequency and electrolytic type.)
7. To prevent surge destruction, the wiring between the snubber capacitor and the P terminal, Ns node should be as short as possible. Generally a 0.1μ to 0.22μF snubber capacitor (C6) between the P terminal and Ns node is recommended.
8. Two COM terminals (16 & 24 pin) are not connected inside the IPM, it must be both connected to the signal GND outside.
9. It is recommended to insert a zener-diode (22V) between each pair of control supply terminals to prevent surge destruction.
10. If signal GND is connected to power GND by broad pattern, it may cause malfunction by power GND fluctuation. It is recommended to connect signal GND and power GND at only a point.
11. For sense resistor : R_{SC}, It should be pull down with 40.2Ω or more to COM terminal, and the variation within 1% (including temperature characteristics), low inductance type is recommended. And the over 1/8W recommended, but it is necessary to evaluate in your real system finally.
12. Error signal output width(t_{FO}) can be set by the capacitor between CFO terminal and COM terminal. C_{FO}(typ.) = t_{FO} x (9.1 x 10^{-6}) (F)
13. When using an external shunt resistor for over current protection, use a chip-type shunt resistor with low inductance. Do not use a shunt resistor with a large inductance, such as a cement resistor.

Operation sequence

Fig.2-1 Switching waveforms

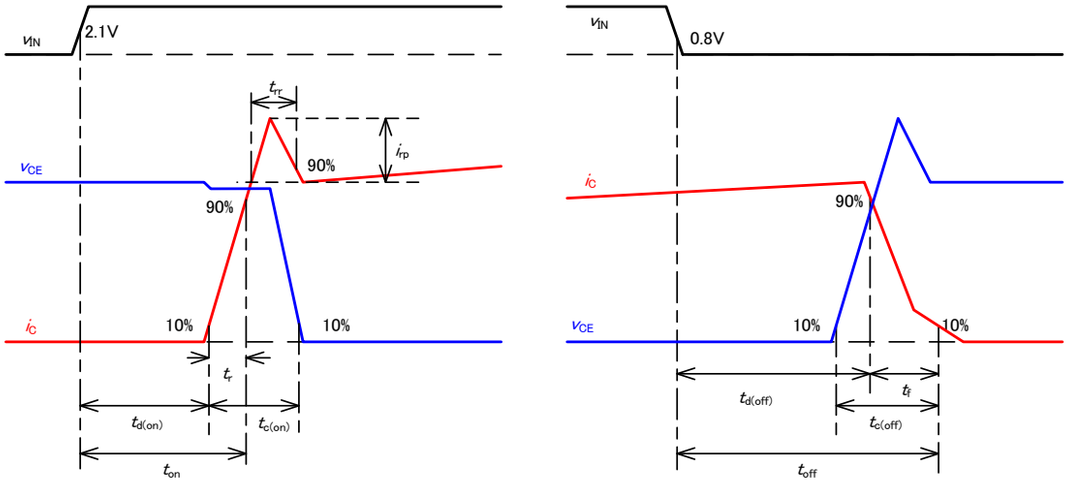

Fig.2-2 Rated Voltage

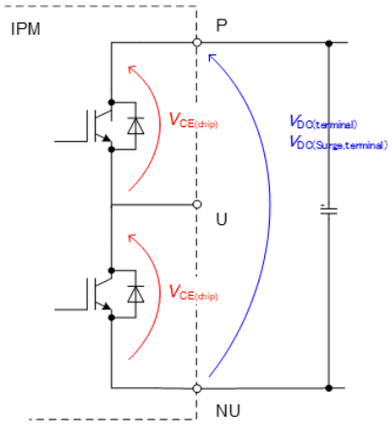

・$V_{DC(terminal)}$, $V_{DC(Surge,terminal)}$ are applied between P-N(U),P-N(V),P-N(W) at the lead stopper.

・$V_{CE(chip)}$ is Collector-Emitter voltage of internal IGBT chip.

[IGBT turn-off]

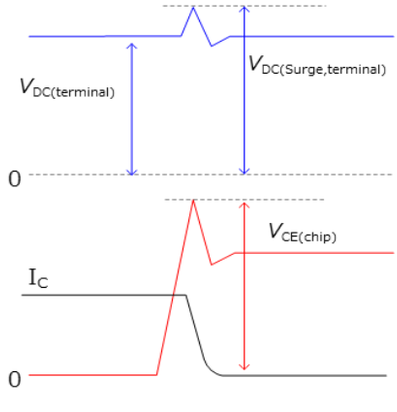

[FWD recovery]

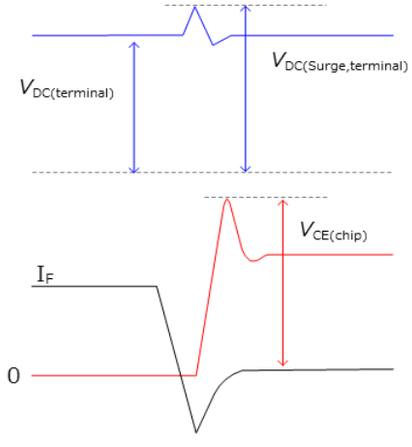

Fig.2-3 Operation sequence of Over current protection

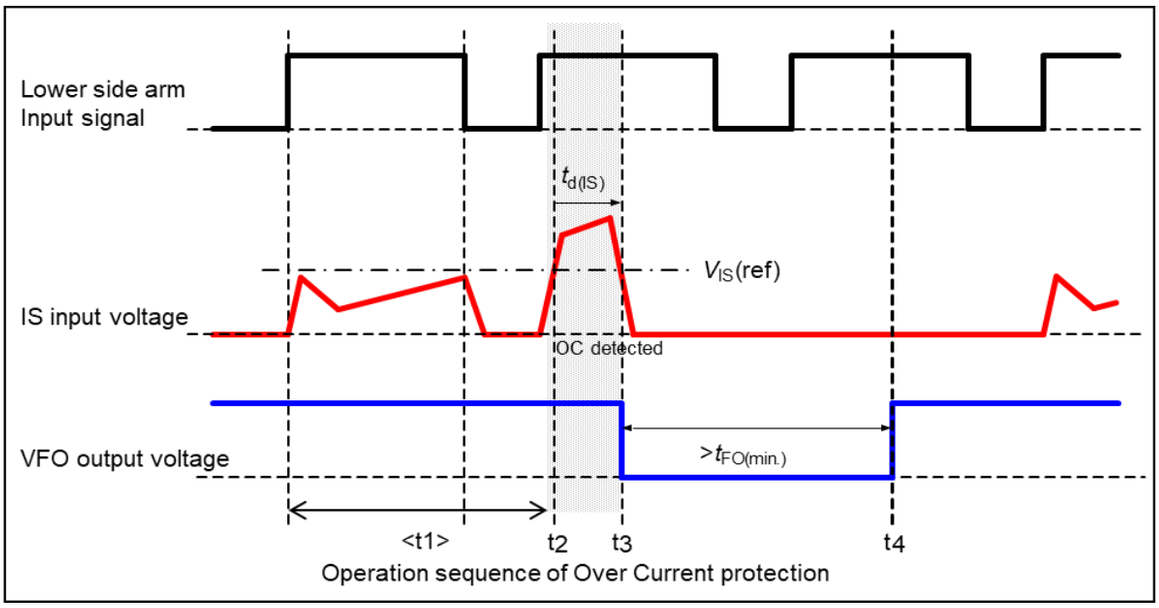

<t1> : IS input voltage does not exceed $V_{IS(ref)}$, while the collector current of the lower side IGBT is under the normal operation.

t2 : When IS input voltage exceeds $V_{IS(ref)}$, the OC is detected.

t3 : The fault output VFO is activated and all lower side IGBT shut down simultaneously after the over current protection delay time $t_{d(IS)}$. Inherently there is dead time of LVIC in $t_{d(IS)}$.

t4 : After the fault output pulse width t_{FO}, the OC is reset. Then next input signal is activated.

Fig.2-4 Operation sequence of V_{CCL} Under voltage protection (lower side arm)

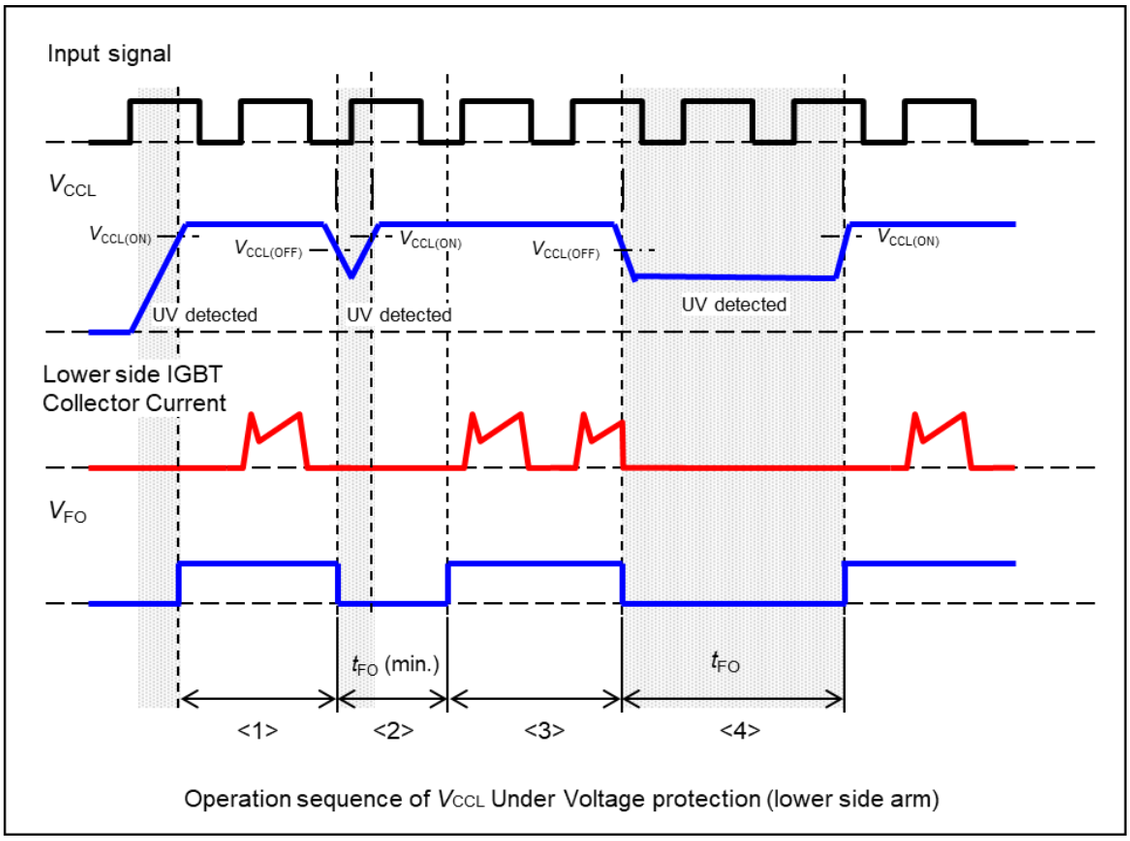

When V_{CCL} is under 4V, UV and fault output are not activated.

<1> When V_{CCL} is under $V_{CCL(ON)}$, all lower side IGBTs are OFF state.
After V_{CCL} rises $V_{CCL(ON)}$, the fault output VFO is released (high level).
And the LVIC starts to operate, then next input is activated.

<2> The fault output VFO is activated when V_{CCL} falls below $V_{CCL(OFF)}$, and all lower side IGBT remains OFF state.
When the voltage drop time is less than t_{FO}(min.), the fault output pulse width is generated t_{FO}(min.) and all lower side IGBTs are OFF state in spite of input signal condition during that time.

<3> UV is reset after t_{FO} when V_{CCL} exceeds $V_{CCL(ON)}$ and the fault output VFO is reset simultaneously.
And the LVIC starts to operate, then next input is activated.

<4> When the voltage drop time is more than t_{FO}, the fault output pulse width is generated and all lower side IGBTs are OFF state in spite of input signal condition during the same time.

Fig.2-5 Operation sequence of $V_{CCH(*)}$ Under voltage protection (upper side arm)

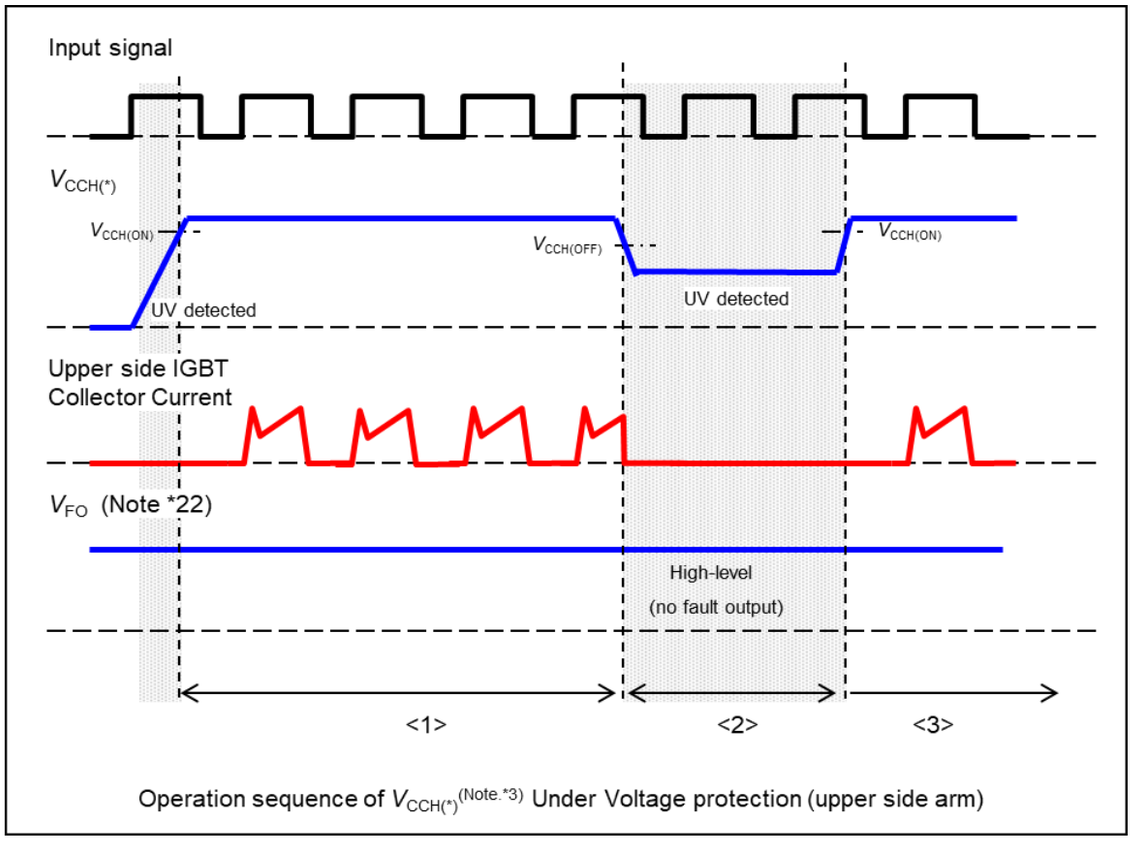

<1> When $V_{CCH(U)}$, $V_{CCH(V)}$ or $V_{CCH(W)}$ are under $V_{CCH(ON)}$, the corresponding upper side IGBTs are OFF state. After $V_{CCH(U)}$, $V_{CCH(V)}$ or $V_{CCH(W)}$ exceed $V_{CCH(ON)}$, the corresponding upper side IGBTs start to operate. Then next input is activated.
The fault output VFO is constant (high level) not to depend on $V_{CCH(*)}$. (Note*22)

<2> After $V_{CCH(U)}$, $V_{CCH(V)}$ or $V_{CCH(W)}$ fall below $V_{CCH(OFF)}$, the corresponding upper side IGBTs remain OFF state. But the fault output VFO keeps high level.

<3> The HVIC starts to operate after UV is reset, then next input is activated.

Note *22 : The fault output is not given HVIC bias conditions.

Fig.2-6 Operation sequence of $V_{B(*)}$ Under voltage protection (upper side arm)

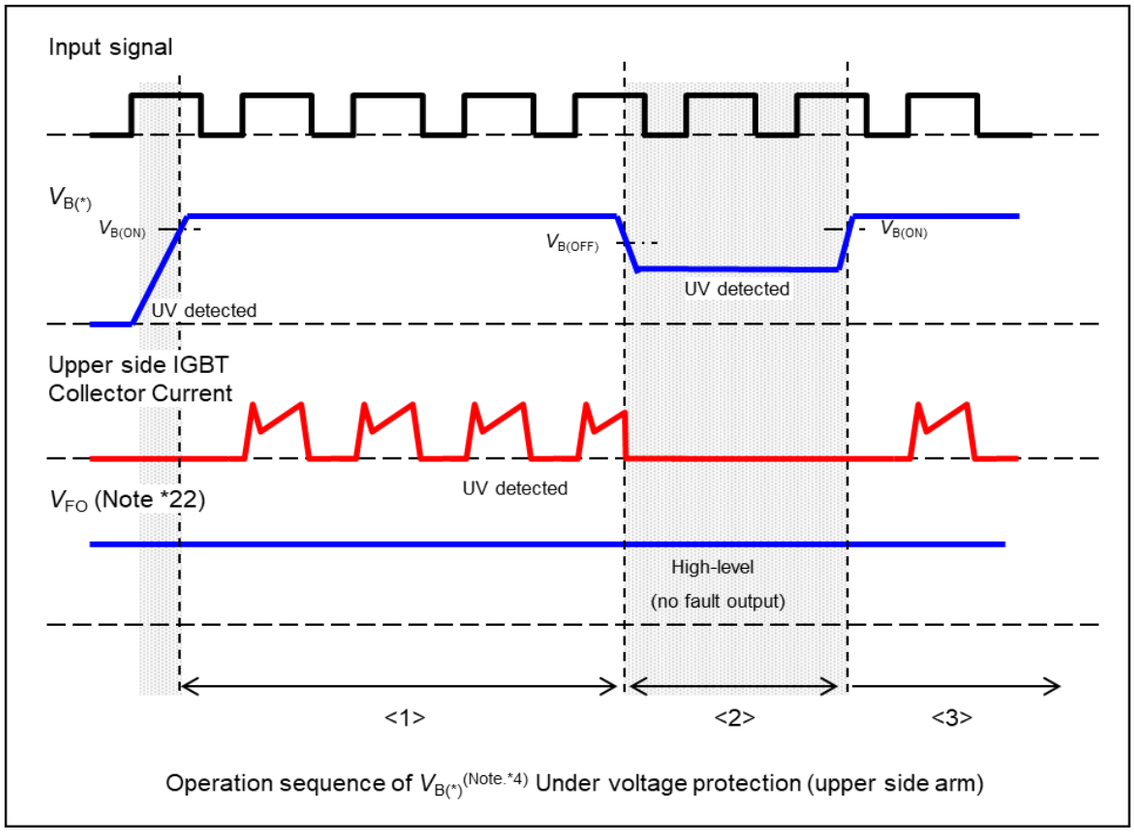

<1> When $V_{B(U)}$, $V_{B(V)}$ or $V_{B(W)}$ are under $V_{B(ON)}$, the corresponding upper side IGBTs are OFF state.
After $V_{B(U)}$, $V_{B(V)}$ or $V_{B(W)}$ exceed $V_{B(ON)}$, the corresponding upper side IGBTs start to operate.
Then next input is activated.
The fault output VFO is constant (high level) not to depend on $V_{B(*)}$. (Note*22)

<2> After $V_{B(U)}$, $V_{B(V)}$ or $V_{B(W)}$ fall below $V_{B(OFF)}$, the corresponding upper side IGBTs remain OFF state.
But the fault output VFO keeps high level.

<3> The HVIC starts to operate after UV is reset, then next input is activated.

Fig.2-7 Overheat Protection

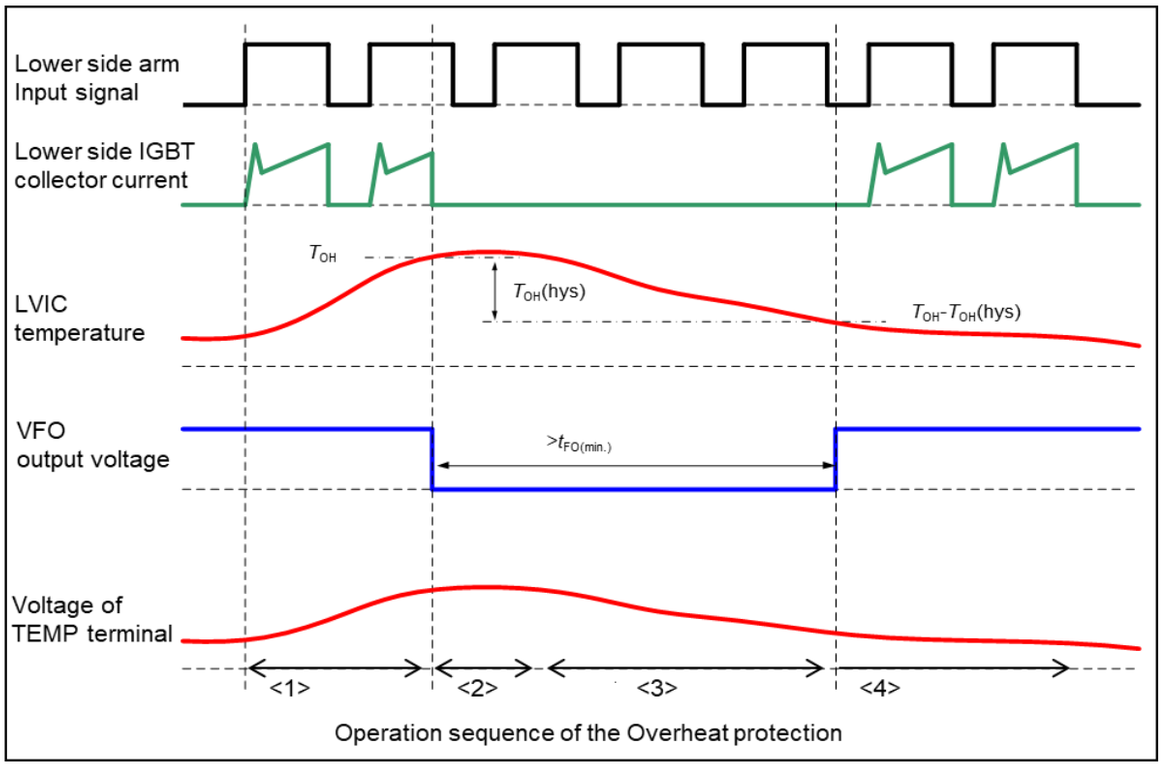

This function is applied to "6MBP**XTC065-50".
The IPM has Overheat protection (OH) function by monitoring the LVIC temperature.
The T_{OH} sensor position is shown in Fig.1-2 (P6).

<1> The collector current of the lower side IGBT is under the normal operation while the LVIC temperature does not exceed T_{OH}.

<2> The IPM shutdown all lower side IGBTs while the LVIC temperature exceeds T_{OH}.

<3> The TEMP terminal continue to output the voltage which correspond to temperature of LVIC even if IPM is in OH condition.

<4> The fault status is reset when the LVIC temperature drops below (T_{OH}-$T_{OH(hys.)}$).
All lower side IGBTs restart to normal operation.

Warnings

1. This Catalog contains the product specifications, characteristics, data, materials, and structures as of 4/2022. The contents are subject to change without notice for specification changes or other reasons. When using a product listed in this Catalog, be sure to obtain the latest specifications.

2. All applications described in this Catalog exemplify the use of Fuji's products for your reference only. No right or license, either express or implied, under any patent, copyright, trade secret or other intellectual property right owned by Fuji Electric Co., Ltd. is (or shall be deemed) granted. Fuji Electric Co., Ltd. makes no representation or warranty, whether express or implied, relating to the infringement or alleged infringement of other's intellectual property rights which may arise from the use of the applications described herein.

3. Although Fuji Electric Co., Ltd. is enhancing product quality and reliability, a small percentage of semiconductor products may become faulty. When using Fuji Electric semiconductor products in your equipment, you are requested to take adequate safety measures to prevent the equipment from causing a physical injury, fire, or other problem if any of the products become faulty. It is recommended to make your design fail-safe, flame retardant, and free of malfunction.

4. The products introduced in this Catalog are intended for use in the following electronic and electrical equipment which has normal reliability requirements.
・Computers ・OA equipment ・Communications equipment (terminal devices) ・Measurement equipment
・Machine tools ・Audiovisual equipment ・Electrical home appliances ・Personal equipment ・Industrial robots etc.

5. If you need to use a product in this Catalog for equipment requiring higher reliability than normal, such as for the equipment listed below, it is imperative to contact Fuji Electric Co., Ltd. to obtain prior approval. When using these products for such equipment, take adequate measures such as a backup system to prevent the equipment from malfunctioning even if a Fuji's product incorporated in the equipment becomes faulty.
・Transportation equipment (mounted on cars and ships) ・Trunk communications equipment
・Traffic-signal control equipment ・Gas leakage detectors with an auto-shut-off feature
・Emergency equipment for responding to disasters and anti-burglary devices ・Safety devices ・Medical equipment

6. Do not use products in this Catalog for the equipment requiring strict reliability such as the following and equivalents to strategic equipment (without limitation).
・Space equipment ・Aeronautic equipment ・Nuclear control equipment ・Submarine repeater equipment

7. Copyright (c)1996-2022 by Fuji Electric Co., Ltd. All rights reserved.
No part of this Catalog may be reproduced in any form or by any means without the express permission of Fuji Electric Co., Ltd.

8. If you have any question about any portion in this Catalog, ask Fuji Electric Co., Ltd. or its sales agents before using the product. Neither Fuji Electric Co., Ltd. nor its agents shall be liable for any injury caused by any use of the products not in accordance with instructions set forth herein.

富士電機 Innovating Energy Technology

Technical Information

IGBT Modules

- Please refer to URLs below for futher information about products, application manuals and design support.
- 关于本规格书中没有记载的产品信息，应用手册，技术信息等，请参考以下链接。
- 本データシートに記載されていない製品情報，アプリケーションマニュアル，デザインサポートは以下のURLをご参照下さい。

FUJI ELECTRIC Power Semiconductor WEB site

日本	www.fujielectric.co.jp/products/semiconductor/
Global	www.fujielectric.com/products/semiconductor/
中国	www.fujielectric.com.cn/products/semiconductor/
Europe	www.fujielectric-europe.com/en/power_semiconductor/
North America	www.americas.fujielectric.com/products/semiconductors/

Information

日本

1 半導体総合カタログ	www.fujielectric.co.jp/products/semiconductor/catalog/
2 製品情報	www.fujielectric.co.jp/products/semiconductor/model/
3 アプリケーションマニュアル	www.fujielectric.co.jp/products/semiconductor/model/igbt/application/
4 デザインサポート	www.fujielectric.co.jp/products/semiconductor/model/igbt/technical/
5 マウンティングインストラクション	www.fujielectric.co.jp/products/semiconductor/model/igbt/mounting/
6 IGBT 損失シミュレーションソフト	www.fujielectric.co.jp/products/semiconductor/model/igbt/simulation/
7 富士電機技報	www.fujielectric.co.jp/products/semiconductor/journal/
8 製品のお問い合わせ	www.fujielectric.co.jp/products/semiconductor/contact/
9 改廃のお知らせ	www.fujielectric.co.jp/products/semiconductor/discontinued/

Global

1 Semiconductors General Catalog	www.fujielectric.com/products/semiconductor/catalog/
2 Product Information	www.fujielectric.com/products/semiconductor/model/
3 Application Manuals	www.fujielectric.com/products/semiconductor/model/igbt/application/
4 Design Support	www.fujielectric.com/products/semiconductor/model/igbt/technical/
5 Mounting Instructions	www.fujielectric.com/products/semiconductor/model/igbt/mounting/
6 IGBT Loss Simulation Software	www.fujielectric.com/products/semiconductor/model/igbt/simulation/
7 Fuji Electric Journal	www.fujielectric.com/products/semiconductor/journal/
8 Contact	www.fujielectric.com/contact/
9 Revised and discontinued product information	www.fujielectric.com/products/semiconductor/discontinued/

中国

1 半导体综合目录	www.fujielectric.com.cn/products/semiconductor/catalog/
2 产品信息	www.fujielectric.com.cn/products/semiconductor/model/
3 应用手册	www.fujielectric.com.cn/products/semiconductor/model/igbt/application/
4 技术信息	www.fujielectric.com.cn/products/semiconductor/model/igbt/technical/
5 安装说明书	www.fujielectric.com.cn/products/semiconductor/model/igbt/mounting/
6 IGBT 损耗模拟软件	www.fujielectric.com.cn/products/semiconductor/model/igbt/simulation/
7 富士电机技报	www.fujielectric.com.cn/products/semiconductor/journal/
8 产品咨询	www.fujielectric.com/contact/
9 产品更改和停产信息	www.fujielectric.com.cn/products/semiconductor/discontinued/

ENTEGRECİ

Bu belge www.entegreci.com üzerinden sunulmaktadır.

Elektronik komponent tedarikinde Entegreci

Entegreci, Eskişehir merkezli, Türkiye geneline satış yapan bir elektronik komponent mağazasıdır. Entegreler (IC), mikrodenetleyiciler, transistörler, diyotlar, pasif elemanlar, konnektörler, modüller ve geliştirme kartları tek adetten seri üretim adetlerine kadar satılır. Ürün sayfalarında güncel stok durumunu, fiyatı ve datasheet bağlantısını bulabilirsiniz.

Parça koduyla arama

Üretici parça numarasını yazın; stok ve fiyatı hemen görün.

www.entegreci.com

Ürün kategorileri

Entegreden kapasitöre tüm elektronik komponent kategorileri.

Kategorilere göz atın

Üreticiler

Aradığınız üreticinin ürünlerini tek sayfada inceleyin.

Üreticileri görün

Toplu alım ve teklif

Listede olmayan ya da yüksek adetli parçalar için teklif isteyin.

Teklif isteyin

www.entegreci.com | **destek@entegreci.com** | **0850 305 90 34**

Entegreci is an online electronic components store based in Türkiye. Search by manufacturer part number to see stock, prices and datasheets for integrated circuits, microcontrollers, transistors, passive components and connectors, or request a quote for parts that are not listed.

Bu sayfa Entegreci tarafından eklenmiştir. Belgenin önceki sayfaları asıl yayıncısına aittir ve içeriği değiştirilmemiştir; en güncel sürüm için belgenin yayıncısına başvurun.