Description

The AP139 is a positive voltage linear regulator utilizing CMOS technology. The features that include low quiescent current (45μA typ), low dropout voltage, and high output voltage accuracy, make it ideal for battery applications. EN input connected to the device will produce a low bias current. The space-saving SOT25 package is attractive for “pocket” and “hand held” applications.

This rugged device has both thermal shutdown and current limit protections to prevent device failure under the “worst” operating conditions.

In a low noise, regulated supply application, a 10nF capacitor is necessary to be placed in between Bypass and Ground.

The AP139 is stable with a low ESR output capacitor of 1.0μF or greater.

Pin Assignments

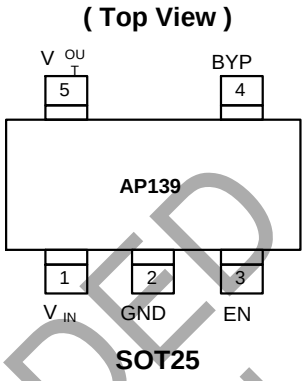

Features

- Very Low Dropout Voltage
- Low Current Consumption: typ 45μA, max 60μA
- Output Voltage: 1.5V, 1.8V, 2.0V, 2.5V, 2.8V, 3.0V, 3.3V, and 3.5V
- Guaranteed 300mA Output
- Input Range from 2.7V up to 5.5V
- Thermal Shutdown
- Current Limiting
- Stability with Low ESR Capacitors
- Low Temperature Coefficient
- SOT25
  - **Lead-Free Finish; RoHS Compliant (Notes 1 & 2)**
- Available in “Green” Package: SOT25
  - **Lead-Free Finish; RoHS Compliant (Notes 1 & 2)**
  - **Halogen and Antimony Free. “Green” Device (Note 3)**
- **For automotive applications requiring specific change control (i.e. parts qualified to AEC-Q100/101/104/200, PPAP capable, and manufactured in IATF 16949 certified facilities), please contact us or your local Diodes representative. https://www.diodes.com/quality/product-definitions/**

Applications

- Personal communication devices
- Home electric/electronic appliances
- PC peripherals
- Battery-powered devices

NOT RECOMMENDED FOR NEW DESIGN

Notes:
1. EU Directive 2002/95/EC (RoHS), 2011/65/EU (RoHS 2) & 2015/863/EU (RoHS 3) compliant. All applicable RoHS exemptions applied.
2. See https://www.diodes.com/quality/lead-free/ for more information about Diodes Incorporated’s definitions of Halogen- and Antimony-free, "Green" and Lead-free.
3. Halogen- and Antimony-free "Green” products are defined as those which contain <900ppm bromine, <900ppm chlorine (<1500ppm total Br + Cl) and <1000ppm antimony compounds.

© 2023 Copyright Diodes Incorporated. All Rights Reserved.

Typical Application

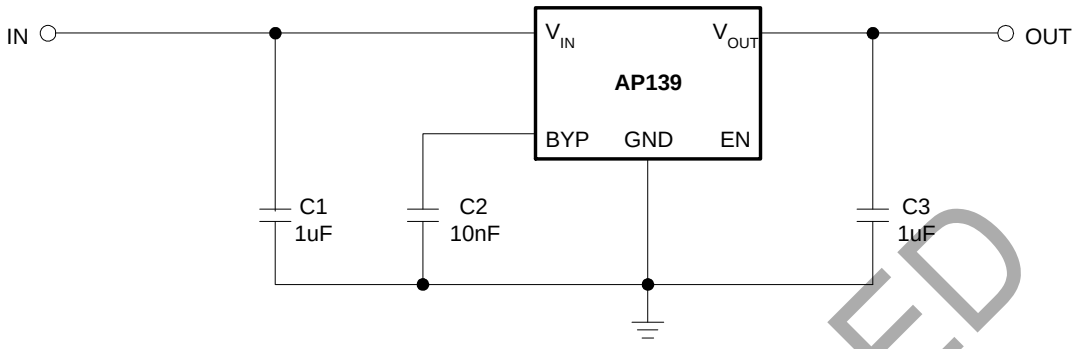

Pin Descriptions

Pin Name	Pin Number	Description
V_{IN}	1	Power Supply
GND	2	Ground
EN	3	Enable Pin
BYP	4	Bypass Signal Pin
V_{OUT}	5	Output

Block Diagram

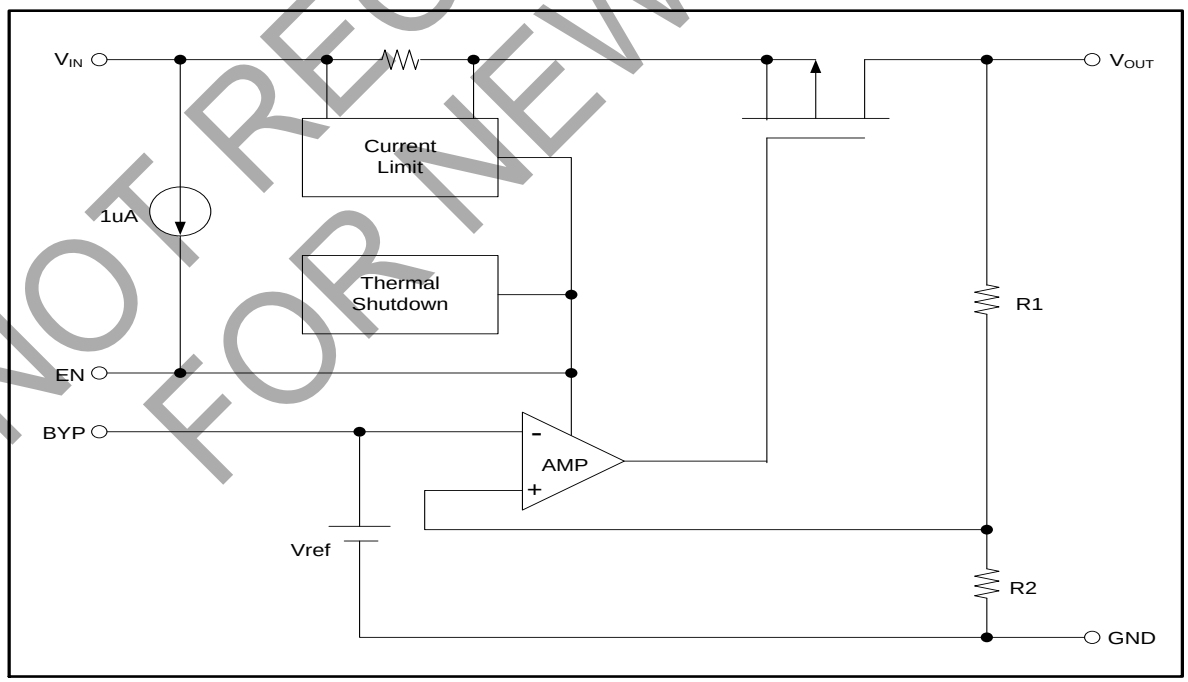

NOT RECOMMENDED FOR NEW DESIGN

© 2023 Copyright Diodes Incorporated. All Rights Reserved.

Absolute Maximum Ratings (Note 4)

Symbol	Parameter	Rating	Unit
V_{IN}	Input Voltage	+6	V
I_{OUT}	Output Current	$P_D / (V_{IN}-V_O)$	mA
V_{OUT}	Output Voltage	GND - 0.3 to V_{IN}+ 0.3	V
—	ESD Classification	B	—
T_{OP}	Operating Junction Temperature Range	-40 to +125	°C
T_{MJ}	Maximum Junction Temperature	+150	°C
P_D	Internal Power Dissipation	250	mW

Note: 4. Stresses greater than those listed under *Absolute Maximum Ratings* can cause permanent damage to the device. These are stress ratings only, and functional operation of the device at these or any other conditions beyond those indicated under *Recommended Operating Conditions* is not implied. Exposure to *Absolute Maximum Ratings* for extended periods can affect device reliability.

Recommended Operating Conditions

Symbol	Parameter	Min	Max	Unit
V_{IN}	Input Voltage	2.7	5.5	V
I_{OUT}	Output Current	0	300	mA
T_A	Operating Ambient Temperature	-40	+85	°C

Electrical Characteristics (T_A = +25°C, unless otherwise noted)

Symbol	Parameter	Test Conditions		Min	Typ	Max	Unit
V_{IN}	Input Voltage	—		Note 5	—	5.5	V
I_Q	Quiescent Current	I_O = 0mA		—	45	60	μA
I_{STB}	Standby Current	V_{IN} = 5.0V, V_{OUT} = 0V, V_{EN} < V_{EL}		—	2.0	3.0	μA
V_{OUT}	Output Voltage Accuracy	I_O = 1mA, V_{IN} = 5V		-2	—	2	%
	V_{OUT} Temperature Coefficient	—		—	50	—	ppm/°C
$V_{DROPOUT}$	Dropout Voltage	I_O = 1mA to 300mA V_{OUT} = $V_{O(NOM)}$ - 1.5%	V_O ≥ 2.8V	—	—	0.45	V
I_{OUT}	Output Current	—		300	—	—	mA
I_{LIMIT}	Current Limit	V_{OUT} > 1.05V		300	450	—	mA
I_{short}	Short-Circuit Current	V_{CC} = 5V, V_{OUT} < 1.05V		—	150	300	mA
$\triangle V_{LINE}$	Line Regulation	I_{OUT} = 1mA, V_{IN} = (V_{OUT} +1V) to 5.5V		—	0.1	0.3	%
$\triangle V_{LOAD}$	Load Regulation	I_O = 1mA to 300mA, V_{IN} = 5V		—	0.3	1	%
PSRR	Power Supply Rejection	I_O = 100mA C_O = 2.2μF ceramic	f = 1kHz	—	60	—	dB
			f = 10kHz	—	50	—	
			f = 100kHz	—	40	—	
PSRR	Power Supply Rejection	I_O = 100mA C_O = 2.2μF ceramic C_{BYP} = 20nF	f = 1kHz	—	75	—	dB
			f = 10kHz	—	55	—	
			f = 100kHz	—	30	—	
V_{EH}	EN Input Threshold	Output ON		1.7	—	—	V
V_{EL}		Output OFF		—	—	0.8	V
I_{EN}	Enable Pin Current	—		—	—	<0.1	μA
OTS	Overtemperature Shutdown	—		—	+130	—	°C
OTH	Overtemperature Hysteresis	—		—	+20	—	°C
θ_{JA}	Thermal Resistance	SOT25 (Note 6)		—	226	—	°C/W
θ_{JC}	Thermal Resistance	SOT25 (Note 6)		—	34	—	°C/W

Notes: 5. $V_{IN(MIN)}$ = V_{OUT} + $V_{DROPOUT}$.
6. Test conditions for SOT25: devices mounted on FR-4 PC board, MRP, 1oz. copper, single sided, calibrate at T_J = +85°C, measure at T_A = +25°C, no heatsink, no air flow.

NOT RECOMMENDED FOR NEW DESIGN

© 2023 Copyright Diodes Incorporated. All Rights Reserved.

Typical Performance Characteristics

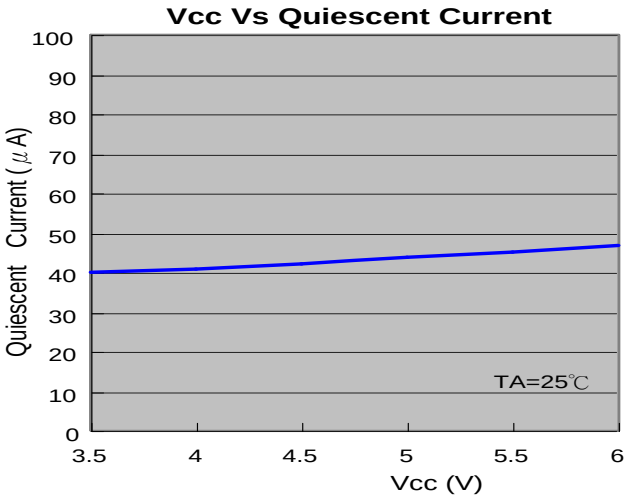

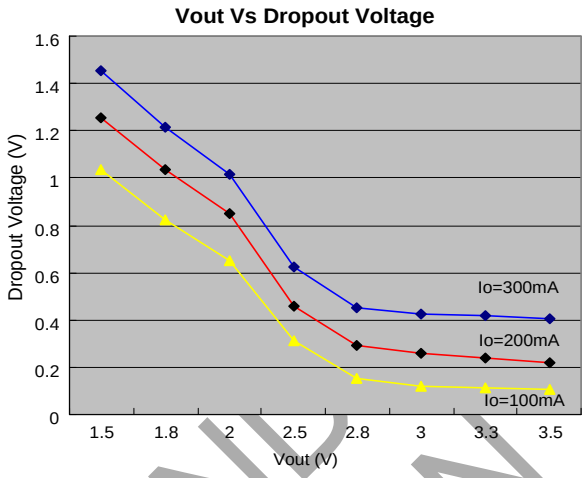

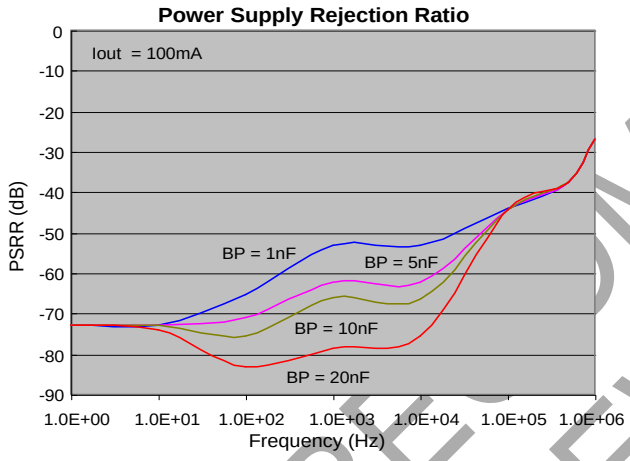

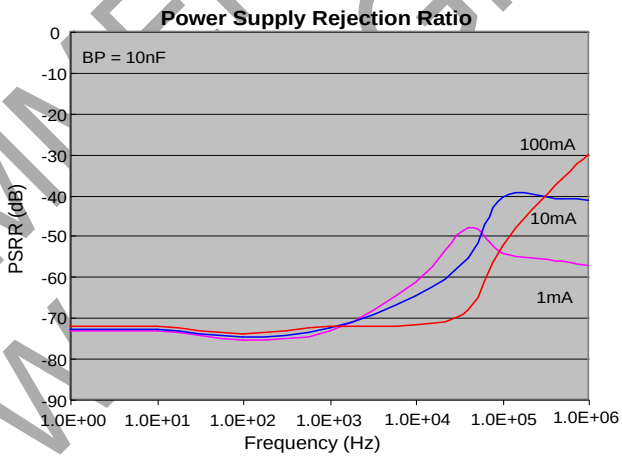

NOT RECOMMEND FOR NEW DESIGN

© 2023 Copyright Diodes Incorporated. All Rights Reserved.

Typical Performance Characteristics (continued)

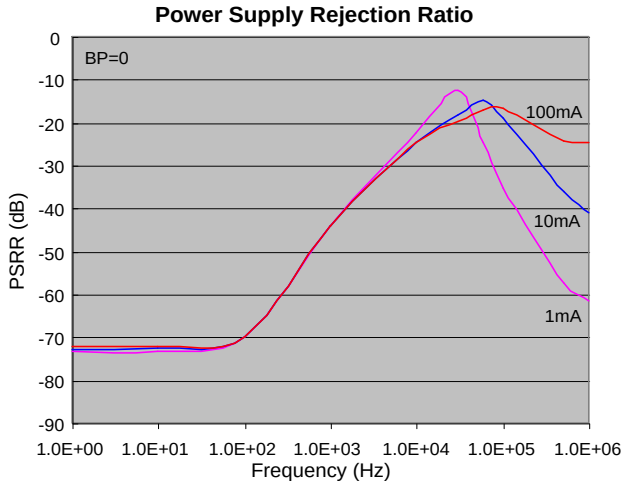

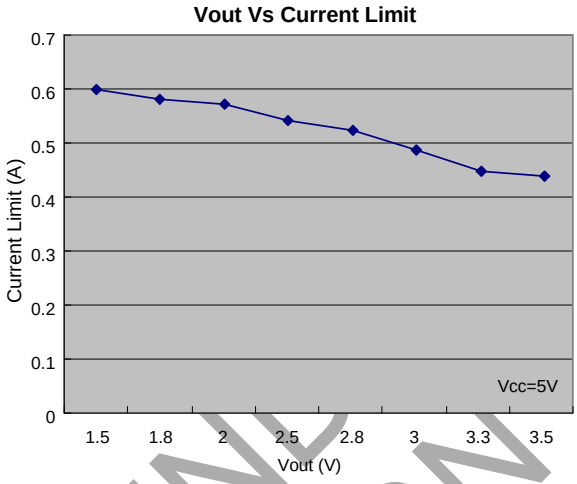

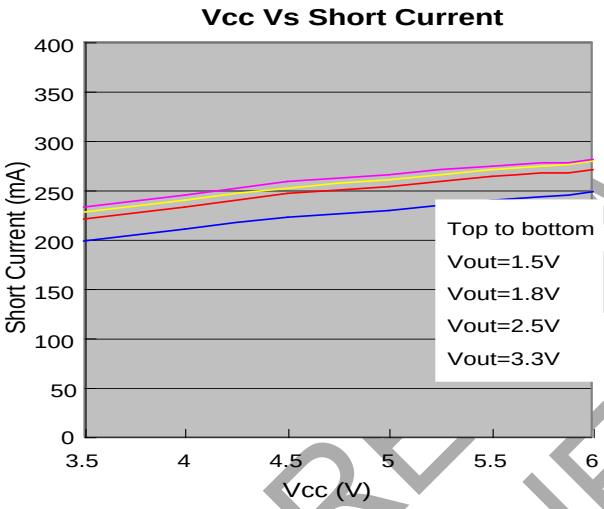

NOT RECOMMENDED FOR NEW DESIGN

© 2023 Copyright Diodes Incorporated. All Rights Reserved.

Functional Description

The AP139 of CMOS regulators contain a pMOS pass transistor, voltage reference, error amplifier, overcurrent protection, and thermal shutdown.

The p-channel pass transistor receives data from the error amplifier, overcurrent protection, and thermal protection circuits. During normal operation, the error amplifier compares the output voltage to a precision reference. The overcurrent and thermal shutdown circuits become active when the junction temperature exceeds +130°C, or the current exceeds 300mA. During thermal shutdown, the output voltage remains low. Normal operation is restored when the junction temperature drops below +110°C.

The AP139 switches from voltage mode to current mode when the load exceeds the rated output current. This prevents over-stress.

Enable

The enable pin normally floats high. When active, pulled low, the pMOS pass transistor shuts off, and all internal circuits are powered down. In this state, the quiescent current is less than 2μA. This pin behaves much like an electronic switch.

External Capacitor

The AP139 is stable with a low ESR output capacitor to ground of 1.0μF or greater. It can keep stable even with higher ESR capacitors. A second capacitor is recommended between the input and ground to stabilize V_{IN}. The input capacitor should be larger than 0.1μF to have a beneficial effect. All capacitors should be placed in close proximity to the pins. A “quiet” ground termination is desirable.

NOT RECOMMENDED FOR NEW DESIGN

© 2023 Copyright Diodes Incorporated. All Rights Reserved.

Ordering Information

AP139 - XX W X - 7

Output Voltage	Package	Lead Free	Packing
15:1.5V 18:1.8V 20:2.0V 25:2.5V 28:2.8V 30:3.0V 33:3.3V 35:3.5V	W : SOT25	L : Lead Free G : Green	7 : Tape & Reel

Part Number	Part Number Suffix	Package Code	Package (Note 7)	Packing		Status (Note 8)
				Qty.	Carrier	
AP139-XXWL-7	-7	W	SOT25	3000	7" Tape & Reel	EOL
AP139-XXWG-7	-7	W	SOT25	3000	7" Tape & Reel	NRND

Notes: 7. Pad layout as shown on Diodes Incorporated's suggested pad layout, which can be found on our website at http://www.diodes.com/package-outlines.html.
8. EOL = End of Life; NRND = Not Recommended for New Design. Please contact us.

Marking Information

SOT25

(Top View)

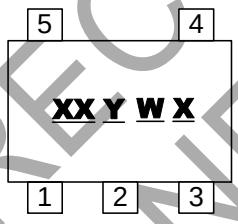

XX : Identification Code
Y : Year 0 to 9
W : Week : A to Z : week 1 to 26;
a to z : week 27 to 52; z represents
week 52 and 53
X : a to z : Lead Free
A to Z : Green

Part Number	Package	Identification Code
AP139-15W	SOT25	N0
AP139-18W	SOT25	N1
AP139-20W	SOT25	N2
AP139-25W	SOT25	N3
AP139-28W	SOT25	N4
AP139-30W	SOT25	N5
AP139-33W	SOT25	N6
AP139-35W	SOT25	N7

NOT RECOMMENDED FOR NEW DESIGN

© 2023 Copyright Diodes Incorporated. All Rights Reserved.

Package Information (All Dimensions in mm)

Please see http://www.diodes.com/package-outlines.html for the latest version.

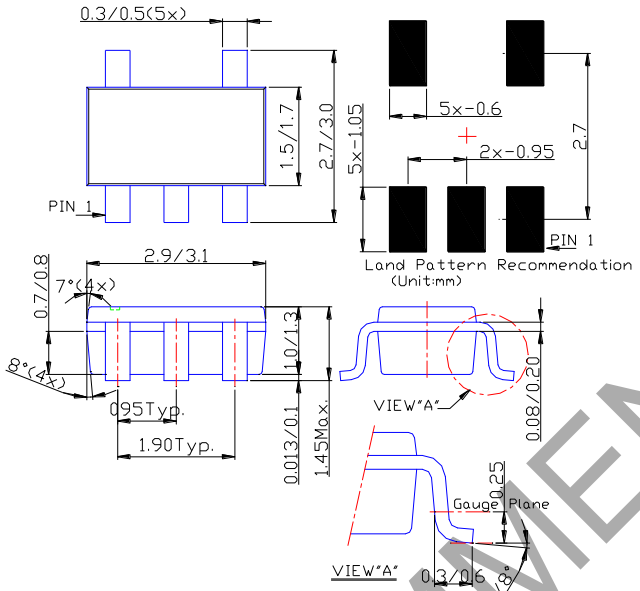

NOT RECOMMENDED FOR NEW DESIGN

© 2023 Copyright Diodes Incorporated. All Rights Reserved.

IMPORTANT NOTICE

1. DIODES INCORPORATED (Diodes) AND ITS SUBSIDIARIES MAKE NO WARRANTY OF ANY KIND, EXPRESS OR IMPLIED, WITH REGARDS TO ANY INFORMATION CONTAINED IN THIS DOCUMENT, INCLUDING, BUT NOT LIMITED TO, THE IMPLIED WARRANTIES OF MERCHANTABILITY, FITNESS FOR A PARTICULAR PURPOSE OR NON-INFRINGEMENT OF THIRD PARTY INTELLECTUAL PROPERTY RIGHTS (AND THEIR EQUIVALENTS UNDER THE LAWS OF ANY JURISDICTION).

2. The Information contained herein is for informational purpose only and is provided only to illustrate the operation of Diodes' products described herein and application examples. Diodes does not assume any liability arising out of the application or use of this document or any product described herein. This document is intended for skilled and technically trained engineering customers and users who design with Diodes' products. Diodes' products may be used to facilitate safety-related applications; however, in all instances customers and users are responsible for (a) selecting the appropriate Diodes products for their applications, (b) evaluating the suitability of Diodes' products for their intended applications, (c) ensuring their applications, which incorporate Diodes' products, comply the applicable legal and regulatory requirements as well as safety and functional-safety related standards, and (d) ensuring they design with appropriate safeguards (including testing, validation, quality control techniques, redundancy, malfunction prevention, and appropriate treatment for aging degradation) to minimize the risks associated with their applications.

3. Diodes assumes no liability for any application-related information, support, assistance or feedback that may be provided by Diodes from time to time. Any customer or user of this document or products described herein will assume all risks and liabilities associated with such use, and will hold Diodes and all companies whose products are represented herein or on Diodes' websites, harmless against all damages and liabilities.

4. Products described herein may be covered by one or more United States, international or foreign patents and pending patent applications. Product names and markings noted herein may also be covered by one or more United States, international or foreign trademarks and trademark applications. Diodes does not convey any license under any of its intellectual property rights or the rights of any third parties (including third parties whose products and services may be described in this document or on Diodes' website) under this document.

5. Diodes' products are provided subject to Diodes' Standard Terms and Conditions of Sale (https://www.diodes.com/about/company/terms-and-conditions/terms-and-conditions-of-sales/) or other applicable terms. This document does not alter or expand the applicable warranties provided by Diodes. Diodes does not warrant or accept any liability whatsoever in respect of any products purchased through unauthorized sales channel.

6. Diodes' products and technology may not be used for or incorporated into any products or systems whose manufacture, use or sale is prohibited under any applicable laws and regulations. Should customers or users use Diodes' products in contravention of any applicable laws or regulations, or for any unintended or unauthorized application, customers and users will (a) be solely responsible for any damages, losses or penalties arising in connection therewith or as a result thereof, and (b) indemnify and hold Diodes and its representatives and agents harmless against any and all claims, damages, expenses, and attorney fees arising out of, directly or indirectly, any claim relating to any noncompliance with the applicable laws and regulations, as well as any unintended or unauthorized application.

7. While efforts have been made to ensure the information contained in this document is accurate, complete and current, it may contain technical inaccuracies, omissions and typographical errors. Diodes does not warrant that information contained in this document is error-free and Diodes is under no obligation to update or otherwise correct this information. Notwithstanding the foregoing, Diodes reserves the right to make modifications, enhancements, improvements, corrections or other changes without further notice to this document and any product described herein. This document is written in English but may be translated into multiple languages for reference. Only the English version of this document is the final and determinative format released by Diodes.

8. Any unauthorized copying, modification, distribution, transmission, display or other use of this document (or any portion hereof) is prohibited. Diodes assumes no responsibility for any losses incurred by the customers or users or any third parties arising from any such unauthorized use.

9. This Notice may be periodically updated with the most recent version available at https://www.diodes.com/about/company/terms-and-conditions/important-notice

The Diodes logo is a registered trademark of Diodes Incorporated in the United States and other countries.
All other trademarks are the property of their respective owners.
© 2023 Diodes Incorporated. All Rights Reserved.

www.diodes.com

NOT RECOMMENDED FOR NEW DESIGN

© 2023 Copyright Diodes Incorporated. All Rights Reserved.

ENTEGRECİ

Bu belge www.entegreci.com üzerinden sunulmaktadır.

Elektronik komponent tedarikinde Entegreci

Entegreci, Eskişehir merkezli, Türkiye geneline satış yapan bir elektronik komponent mağazasıdır. Entegreler (IC), mikrodenetleyiciler, transistörler, diyotlar, pasif elemanlar, konnektörler, modüller ve geliştirme kartları tek adetten seri üretim adetlerine kadar satılır. Ürün sayfalarında güncel stok durumunu, fiyatı ve datasheet bağlantısını bulabilirsiniz.

Parça koduyla arama

Üretici parça numarasını yazın; stok ve fiyatı hemen görün.

www.entegreci.com

Ürün kategorileri

Entegreden kapasitöre tüm elektronik komponent kategorileri.

Kategorilere göz atın

Üreticiler

Aradığınız üreticinin ürünlerini tek sayfada inceleyin.

Üreticileri görün

Toplu alım ve teklif

Listede olmayan ya da yüksek adetli parçalar için teklif isteyin.

Teklif isteyin

www.entegreci.com | **destek@entegreci.com** | **0850 305 90 34**

Entegreci is an online electronic components store based in Türkiye. Search by manufacturer part number to see stock, prices and datasheets for integrated circuits, microcontrollers, transistors, passive components and connectors, or request a quote for parts that are not listed.

Bu sayfa Entegreci tarafından eklenmiştir. Belgenin önceki sayfaları asıl yayıncısına aittir ve içeriği değiştirilmemiştir; en güncel sürüm için belgenin yayıncısına başvurun.