Description

The AP2112 is CMOS process low dropout linear regulator with enable function, the regulator delivers a guaranteed 600mA (min.) continuous load current.

The AP2112 is available with a fixed output voltage of 1.2V, 1.8V, 2.5V, 2.6V, or 3.3V. The LDO has an output accuracy of ±1.5% and a very fast loop response providing excellent performance for dealing with line and load transients. The AP2112 includes an auto discharge function which connects the output to ground via 60Ω of resistance when the device is disabled.

The regulator features low power consumption, and provides SOT25, SOT89-5, and SO-8 packages. Previously SOT-23-5, SOT-89-5 and SOIC-8 packages were respectively identified as SOT23-5, SOT89-5 and SO-8 but have been renamed to match the latest Diodes Incorporated's nomenclature.

Features

- Output Voltage Accuracy: ±1.5%
- Output Current: 600mA (Min.)
- Foldback Short Current Protection: 50mA
- Enable Function to Turn ON/OFF V_{OUT}
- Low Dropout Voltage (3.3V): 250mV (Typ.) @I_{OUT} = 600mA
- Excellent Load Regulation: 0.2%/A (Typ.)
- Excellent Line Regulation: 0.02%/V (Typ.)
- Low Quiescent Current: 55µA (Typ.)
- Low Standby Current: 0.01µA (Typ.)
- Low Output Noise: 50μV_{RMS}
- PSRR: 100Hz -65dB, 1kHz -65dB
- OTSD Protection
- Stable with 1.0µF Flexible Cap: Ceramic, Tantalum and Aluminum Electrolytic
- Operation Temperature Range: -40°C to +85°C
- ESD: MM 400V, HBM 4000V
- **Totally Lead-Free & Fully RoHS Compliant (Notes 1 & 2)**
- **Halogen and Antimony Free. "Green" Device (Note 3)**

Applications

- Laptop Computer
- LCD Monitor
- Portable DVD

Pin Assignments

(Top View)

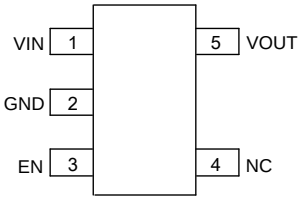

SOT25

(Top View)

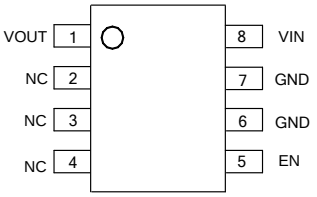

SO-8

(Top View)

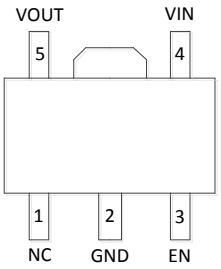

(R5 Package)

(Top View)

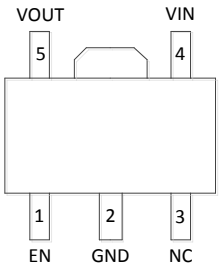

(R5A Package)

SOT89-5 (Option 1)

(Top View)

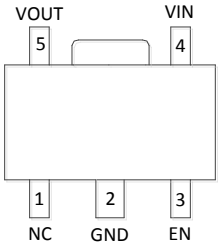

(R5 Package)

(Top View)

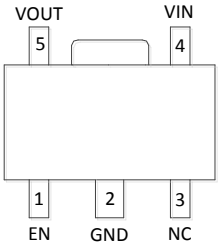

(R5A Package)

SOT89-5 (Option 2)

Notes:
1. No purposely added lead. Fully EU Directive 2002/95/EC (RoHS) & 2011/65/EU (RoHS 2) compliant.
2. See http://www.diodes.com/quality/lead_free.html for more information about Diodes Incorporated's definitions of Halogen- and Antimony-free, "Green" and Lead-free.
3. Halogen- and Antimony-free "Green" products are defined as those which contain <900ppm bromine, <900ppm chlorine (<1500ppm total Br + Cl) and <1000ppm antimony compounds.

© Diodes Incorporated

Typical Applications Circuit (Note 4)

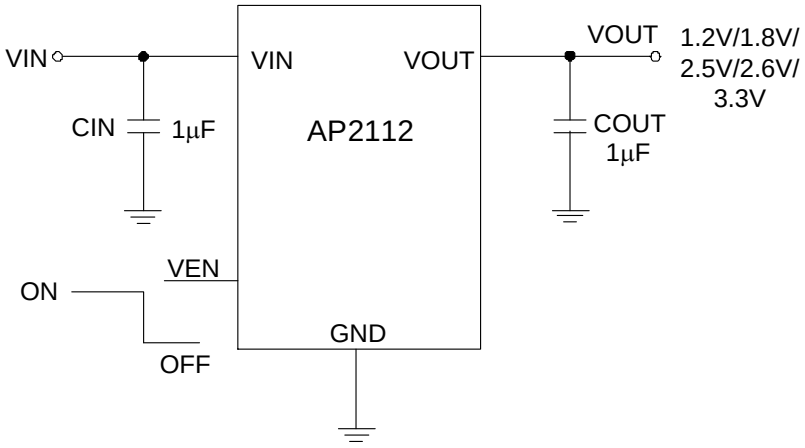

Note 4: It is recommended to use X7R or X5R dielectric capacitor if 1.0μF ceramic capacitor is selected as input/output capacitors.

Pin Descriptions

Pin Number			Pin Name	Function
SOT25	SOT89-5	SO-8		
1	4	8	VIN	Input Voltage
2	2	6, 7	GND	GND
3	3 (R5)	5	EN	Chip Enable, H – normal work, L – shutdown output
	1 (R5A)			
—	1 (R5)	2, 3, 4	NC	No Connection
	3 (R5A)			
5	5	1	VOUT	Output Voltage

Functional Block Diagram

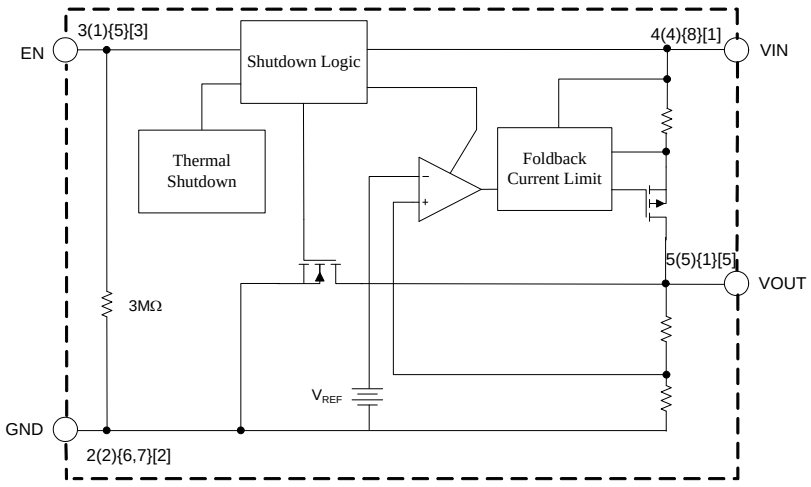

A (B){C}[D]
A: SOT89-5 (R5)
B: SOT89-5 (R5A)
C: SO-8
D: SOT25

© Diodes Incorporated

Absolute Maximum Ratings (Note 5)

Symbol	Parameter	Rating		Unit
V_{CC}	Power Supply Voltage	6.5		V
T_J	Operating Junction Temperature Range	+150		°C
T_{STG}	Storage Temperature Range	-65 to +150		°C
T_{LEAD}	Lead Temperature (Soldering, 10 Seconds)	+260		°C
θ_{JA}	Thermal Resistance (Junction to Ambient)(No Heatsink)	SOT25	184	°C/W
		SO-8	114	
		SOT89-5	120	
—	ESD (Machine Model)	400		V
—	ESD (Human Body Model)	4000		V

Note 5: Stresses greater than those listed under “Absolute Maximum Ratings” may cause permanent damage to the device. These are stress ratings only, and functional operation of the device at these or any other conditions beyond those indicated under “Recommended Operating Conditions” is not implied. Exposure to “Absolute Maximum Ratings” for extended periods may affect device reliability.

Recommended Operating Conditions

Symbol	Parameter	Min	Max	Unit
V_{IN}	Supply Voltage	2.5	6.0	V
T_A	Ambient Operation Temperature Range	-40	+85	°C

© Diodes Incorporated

Electrical Characteristics

AP2112-1.2 Electrical Characteristics

(@V_{IN} = 2.5V, C_{IN} = 1.0µF (Ceramic), C_{OUT} = 1.0µF (Ceramic), Typical T_A = +25°C, unless otherwise specified (Note 6))

Symbol	Parameter	Conditions		Min	Typ	Max	Unit
V_{OUT}	Output Voltage	V_{IN} = 2.5V, 1mA ≤ I_{OUT} ≤ 30mA		V_{OUT} *98.5%	1.2	V_{OUT} *101.5%	V
$I_{OUT(MAX)}$	Maximum Output Current	V_{IN} = 2.5V, V_{OUT} = 1.182V to 1.218V		600	—	—	mA
$(\Delta V_{OUT}/V_{OUT})/\Delta I_{OUT}$	Load Regulation	V_{IN} = 2.5V, 1mA ≤ I_{OUT} ≤ 600mA		-1	0.2	1	%/A
$(\Delta V_{OUT}/V_{OUT})/\Delta V_{IN}$	Line Regulation	2.5V ≤ V_{IN} ≤ 6V, I_{OUT} = 30mA		-0.1	0.02	0.1	%/V
V_{DROP}	Dropout Voltage	I_{OUT} = 10mA		—	1000	1300	mV
		I_{OUT} = 300mA		—	1000	1300	
		I_{OUT} = 600mA		—	1000	1300	
I_Q	Quiescent Current	V_{IN} = 2.5V, I_{OUT} = 0mA		—	55	80	µA
I_{STD}	Standby Current	V_{IN} = 2.5V, V_{EN} in OFF mode		—	0.01	1.0	µA
PSRR	Power Supply Rejection Ratio	Ripple 0.5Vp-p V_{IN} = 2.5V, I_{OUT} = 100mA	f = 100Hz	—	65	—	dB
			f = 1kHz	—	65	—	
$(\Delta V_{OUT}/V_{OUT})/\Delta T$	Output Voltage Temperature Coefficient	I_{OUT} = 30mA T_A = -40°C to +85°C		—	±100	—	ppm/°C
I_{SHORT}	Short Current Limit	V_{OUT} = 0V		—	50	—	mA
V_{NOISE}	RMS Output Noise	No Load, 10Hz ≤ f ≤ 100kHz		—	50	—	μV_{RMS}
V_{IH}	V_{EN} High Voltage	Enable logic high, regulator on		1.5	—	6.0	V
V_{IL}	V_{EN} Low Voltage	Enable logic low, regulator off		0	—	0.4	
t_S	Start-up Time	No Load		—	20	—	µs
R_{PD}	EN Pull Down Resistor	—		—	3.0	—	MΩ
R_{DCHG}	V_{OUT} Discharge Resistor	Set EN pin at Low		—	60	—	Ω
T_{OTSD}	Thermal Shutdown Temperature	—		—	+160	—	°C
T_{HYOTSD}	Thermal Shutdown Hysteresis	—		—	+25	—	
θ_{JC}	Thermal Resistance (Junction to Case)	SOT25		—	96	—	°C/W
		SO-8		—	75	—	
		SOT89-5		—	47	—	

Note 6: Production testing at T_A = +25°C. Over temperature specifications guaranteed by design only.

© Diodes Incorporated

Electrical Characteristics (Cont.)

AP2112-1.8 Electrical Characteristics (@V_{IN} = 2.8V, C_{IN} = 1.0µF (Ceramic), C_{OUT} = 1.0µF (Ceramic), Typical T_A = +25°C, unless otherwise specified (Note 6))

Symbol	Parameter	Conditions		Min	Typ	Max	Unit
V_{OUT}	Output Voltage	V_{IN} = 2.8V, 1mA ≤ I_{OUT} ≤ 30mA		V_{OUT} *98.5%	1.8	V_{OUT} *101.5%	V
$I_{OUT(MAX)}$	Maximum Output Current	V_{IN} = 2.8V, V_{OUT} = 1.773V to 1.827V		600	—	—	mA
$(\Delta V_{OUT}/V_{OUT})/\Delta I_{OUT}$	Load Regulation	V_{OUT} = 1.8V, V_{IN} = V_{OUT}+1V, 1mA ≤ I_{OUT} ≤ 600mA		-1	0.2	1	%/A
$(\Delta V_{OUT}/V_{OUT})/\Delta V_{IN}$	Line Regulation	2.8V ≤ V_{IN} ≤ 6V, I_{OUT} = 30mA		-0.1	0.02	0.1	%/V
V_{DROP}	Dropout Voltage	I_{OUT} = 10mA		—	500	700	mV
		I_{OUT} = 300mA		—	500	700	
		I_{OUT} = 600mA		—	500	700	
I_Q	Quiescent Current	V_{IN} = 2.8V, I_{OUT} = 0mA		—	55	80	µA
I_{STD}	Standby Current	V_{IN} = 2.8V, V_{EN} in OFF mode		—	0.01	1.0	µA
PSRR	Power Supply Rejection Ratio	Ripple 0.5Vp-p V_{IN} = 2.8V, I_{OUT} = 100mA	f = 100Hz	—	65	—	dB
			f = 1kHz	—	65	—	
$(\Delta V_{OUT}/V_{OUT})/\Delta T$	Output Voltage Temperature Coefficient	I_{OUT} = 30mA T_A = -40°C to +85°C		—	±100	—	ppm/°C
I_{SHORT}	Short Current Limit	V_{OUT} = 0V		—	50	—	mA
V_{NOISE}	RMS Output Noise	No Load, 10Hz ≤ f ≤ 100kHz		—	50	—	μV_{RMS}
V_{IH}	V_{EN} High Voltage	Enable logic high, regulator on		1.5	—	6.0	V
V_{IL}	V_{EN} Low Voltage	Enable logic low, regulator off		0	—	0.4	
t_S	Start-up Time	No Load		—	20	—	µs
R_{PD}	EN Pull Down Resistor	—		—	3.0	—	MΩ
R_{DCHG}	V_{OUT} Discharge Resistor	Set EN pin at Low		—	60	—	Ω
T_{OTSD}	Thermal Shutdown Temperature	—		—	+160	—	°C
T_{HYOTSD}	Thermal Shutdown Hysteresis	—		—	+25	—	
θ_{JC}	Thermal Resistance (Junction to Case)	SOT25		—	96	—	°C/W
		SO-8		—	75	—	
		SOT89-5		—	47	—	

Note 6: Production testing at T_A = +25°C. Over temperature specifications guaranteed by design only.

© Diodes Incorporated

Electrical Characteristics (Cont.)

AP2112-2.5 Electrical Characteristics (@V_{IN} = 3.5V, C_{IN} = 1.0µF (Ceramic), C_{OUT} = 1.0µF (Ceramic), Typical T_A = +25°C, unless otherwise specified (Note 6))

Symbol	Parameter	Conditions		Min	Typ	Max	Unit
V_{OUT}	Output Voltage	V_{IN} = 3.5V, 1mA ≤ I_{OUT} ≤ 30mA		V_{OUT} *98.5%	2.5	V_{OUT} *101.5%	V
$I_{OUT(MAX)}$	Maximum Output Current	V_{IN} = 3.5V, V_{OUT} = 2.463V to 2.537V		600	—	—	mA
$(\Delta V_{OUT}/V_{OUT})/\Delta I_{OUT}$	Load Regulation	V_{OUT} = 2.5V, V_{IN} = V_{OUT}+1V, 1mA ≤ I_{OUT} ≤ 600mA		-1	0.2	1	%/A
$(\Delta V_{OUT}/V_{OUT})/\Delta V_{IN}$	Line Regulation	3.5V ≤ V_{IN} ≤ 6V, I_{OUT} = 30mA		-0.1	0.02	0.1	%/V
V_{DROP}	Dropout Voltage	I_{OUT} = 10mA		—	5	8	mV
		I_{OUT} = 300mA		—	125	200	
		I_{OUT} = 600mA		—	250	400	
I_Q	Quiescent Current	V_{IN} = 3.5V, I_{OUT} = 0mA		—	55	80	µA
I_{STD}	Standby Current	V_{IN} = 3.5V, V_{EN} in OFF mode		—	0.01	1.0	µA
PSRR	Power Supply Rejection Ratio	Ripple 0.5Vp-p V_{IN} = 3.5V, I_{OUT} = 100mA	f = 100Hz	—	65	—	dB
			f = 1KHz	—	65	—	
$(\Delta V_{OUT}/V_{OUT})/\Delta T$	Output Voltage Temperature Coefficient	I_{OUT} = 30mA T_A = -40°C to +85°C		—	±100	—	ppm/°C
I_{SHORT}	Short Current Limit	V_{OUT} = 0V		—	50	—	mA
V_{NOISE}	RMS Output Noise	No Load, 10Hz ≤ f ≤ 100kHz		—	50	—	μV_{RMS}
V_{IH}	V_{EN} High Voltage	Enable logic high, regulator on		1.5	—	6.0	V
V_{IL}	V_{EN} Low Voltage	Enable logic low, regulator off		0	—	0.4	
t_S	Start-up Time	No Load		—	20	—	µs
R_{PD}	EN Pull Down Resistor	—		—	3.0	—	MΩ
R_{DCHG}	V_{OUT} Discharge Resistor	Set EN pin at Low		—	60	—	Ω
T_{OTSD}	Thermal Shutdown Temperature	—		—	+160	—	°C
T_{HYOTSD}	Thermal Shutdown Hysteresis	—		—	+25	—	
θ_{JC}	Thermal Resistance (Junction to Case)	SOT25		—	96	—	°C/W
		SO-8		—	75	—	
		SOT89-5		—	47	—	

Note 6: Production testing at T_A = +25°C. Over temperature specifications guaranteed by design only.

© Diodes Incorporated

Electrical Characteristics (Cont.)

AP2112-2.6 Electrical Characteristics (@V_{IN} = 3.6V, C_{IN} = 1.0µF (Ceramic), C_{OUT} = 1.0µF (Ceramic), Typical T_A = +25°C, unless otherwise specified (Note 6))

Symbol	Parameter	Conditions		Min	Typ	Max	Unit
V_{OUT}	Output Voltage	V_{IN} = 3.6V, 1mA ≤ I_{OUT} ≤ 30mA		V_{OUT} *98.5%	2.6	V_{OUT} *101.5%	V
$I_{OUT(MAX)}$	Maximum Output Current	V_{IN} = 3.6V, V_{OUT} = 2.561V to 2.639V		600	—	—	mA
$(\Delta V_{OUT}/V_{OUT})/\Delta I_{OUT}$	Load Regulation	V_{OUT} = 2.6V, V_{IN} = V_{OUT}+1V, 1mA ≤ I_{OUT} ≤ 600mA		-1	0.2	1	%/A
$(\Delta V_{OUT}/V_{OUT})/\Delta V_{IN}$	Line Regulation	3.6V ≤ V_{IN} ≤ 6V, I_{OUT} = 30mA		-0.1	0.02	0.1	%/V
V_{DROP}	Dropout Voltage	I_{OUT} = 10mA		—	5	8	mV
		I_{OUT} = 300mA		—	125	200	
		I_{OUT} = 600mA		—	250	400	
I_Q	Quiescent Current	V_{IN} = 3.6V, I_{OUT} = 0mA		—	55	80	µA
I_{STD}	Standby Current	V_{IN} = 3.6V, V_{EN} in OFF mode		—	0.01	1.0	µA
PSRR	Power Supply Rejection Ratio	Ripple 0.5Vp-p, V_{IN} = 3.6V, I_{OUT} = 100mA	f = 100Hz	—	65	—	dB
			f = 1kHz	—	65	—	
$(\Delta V_{OUT}/V_{OUT})/\Delta T$	Output Voltage Temperature Coefficient	I_{OUT} = 30mA, T_A = -40°C to +85°C		—	±100	—	ppm/°C
I_{SHORT}	Short Current Limit	V_{OUT} = 0V		—	50	—	mA
V_{NOISE}	RMS Output Noise	No Load, 10Hz ≤ f ≤ 100kHz		—	50	—	μV_{RMS}
V_{IH}	V_{EN} High Voltage	Enable logic high, regulator on		1.5	—	6.0	V
V_{IL}	V_{EN} Low Voltage	Enable logic low, regulator off		0	—	0.4	
t_S	Start-up Time	No Load		—	20	—	µs
R_{PD}	EN Pull Down Resistor	—		—	3.0	—	MΩ
R_{DCHG}	V_{OUT} Discharge Resistor	Set EN pin at Low		—	60	—	Ω
T_{OTSD}	Thermal Shutdown Temperature	—		—	+160	—	°C
T_{HYOTSD}	Thermal Shutdown Hysteresis	—		—	+25	—	
θ_{JC}	Thermal Resistance (Junction to Case)	SOT25		—	96	—	°C/W
		SO-8		—	75	—	
		SOT89-5		—	47	—	

Note 6: Production testing at T_A = +25°C. Over temperature specifications guaranteed by design only.

© Diodes Incorporated

Electrical Characteristics (Cont.)

AP2112-3.3 Electrical Characteristics (@V_{IN} = 4.3V, C_{IN} = 1.0µF (Ceramic), C_{OUT} = 1.0µF (Ceramic), Typical T_A = +25°C, unless otherwise specified (Note 6))

Symbol	Parameter	Conditions		Min	Typ	Max	Unit
V_{OUT}	Output Voltage	V_{IN} = 4.3V, 1mA ≤ I_{OUT} ≤ 30mA		V_{OUT} *98.5%	3.3	V_{OUT} *101.5%	V
$I_{OUT(MAX)}$	Maximum Output Current	V_{IN} = 4.3V, V_{OUT} = 3.251V to 3.350V		600	—	—	mA
$(\Delta V_{OUT}/V_{OUT})/\Delta I_{OUT}$	Load Regulation	V_{IN} = 4.3V, 1mA ≤ I_{OUT} ≤ 600mA		-1	0.2	1	%/A
$(\Delta V_{OUT}/V_{OUT})/\Delta V_{IN}$	Line Regulation	4.3V≤ V_{IN} ≤ 6V, I_{OUT} = 30mA		-0.1	0.02	0.1	%/V
V_{DROP}	Dropout Voltage	I_{OUT} = 10mA		—	5	8	mV
		I_{OUT} = 300mA		—	125	200	
		I_{OUT} = 600mA		—	250	400	
I_Q	Quiescent Current	V_{IN} = 4.3V, I_{OUT} = 0mA		—	55	80	µA
I_{STD}	Standby Current	V_{IN} = 4.3V, V_{EN} in OFF mode		—	0.01	1.0	µA
PSRR	Power Supply Rejection Ratio	Ripple 0.5Vp-p V_{IN} = 4.3V, I_{OUT} = 100mA	f = 100Hz	—	65	—	dB
			f = 1kHz	—	65	—	
$(\Delta V_{OUT}/V_{OUT})/\Delta T$	Output Voltage Temperature Coefficient	I_{OUT} = 30mA T_A = -40°C to +85°C		—	±100	—	ppm/°C
I_{SHORT}	Short Current Limit	V_{OUT} = 0V		—	50	—	mA
V_{NOISE}	RMS Output Noise	No Load, 10Hz ≤ f ≤ 100kHz		—	50	—	μV_{RMS}
V_{IH}	V_{EN} High Voltage	Enable logic high, regulator on		1.5	—	6.0	V
V_{IL}	V_{EN} Low Voltage	Enable logic low, regulator off		0	—	0.4	
t_S	Start-up Time	No Load		—	20	—	µs
R_{PD}	EN Pull Down Resistor	—		—	3.0	—	MΩ
R_{DCHG}	V_{OUT} Discharge Resistor	Set EN pin at Low		—	60	—	Ω
T_{OTSD}	Thermal Shutdown Temperature	—		—	+160	—	°C
T_{HYOTSD}	Thermal Shutdown Hysteresis	—		—	+25	—	
θ_{JC}	Thermal Resistance (Junction to Case)	SOT25		—	96	—	°C/W
		SO-8		—	75	—	
		SOT89-5		—	47	—	

Note 6: Production testing at T_A = +25°C. Over temperature specifications guaranteed by design only.

© Diodes Incorporated

Performance Characteristics

Output Voltage vs. Input Voltage

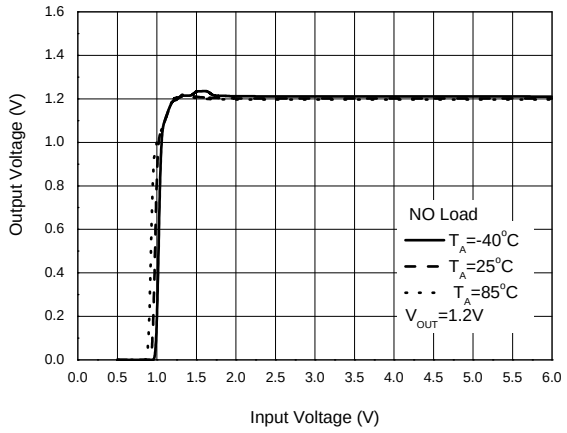

Output Voltage vs. Input Voltage

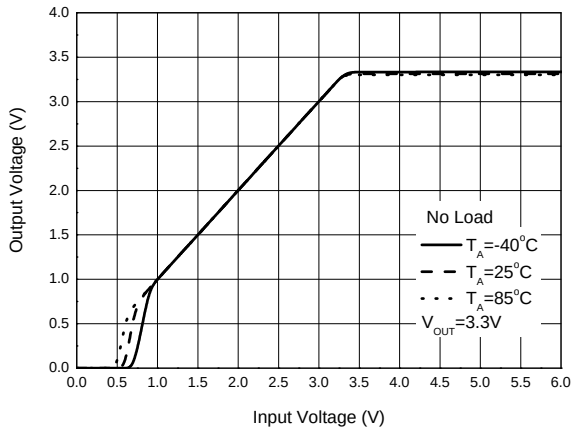

Quiescent Current vs. Temperature

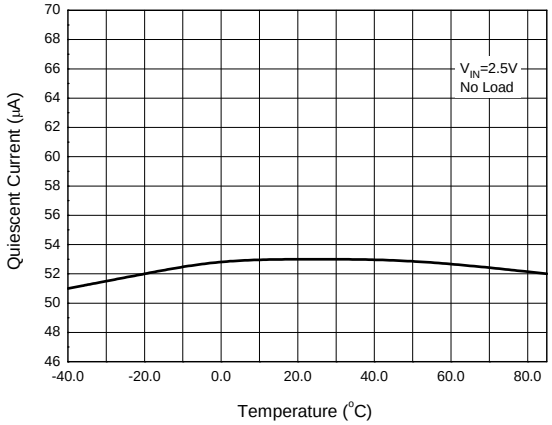

Quiescent Current vs. Input Voltage

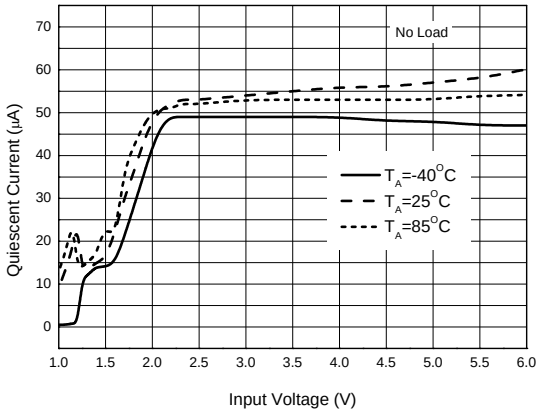

Output Voltage vs. Temperature

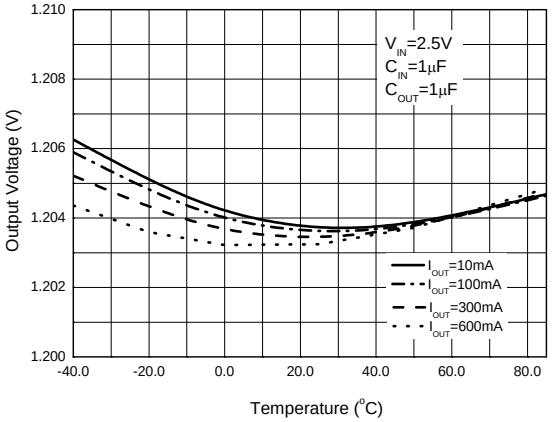

Output Voltage vs. Temperature

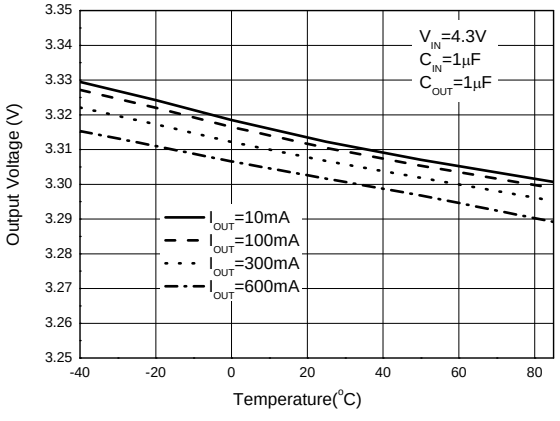

© Diodes Incorporated

Performance Characteristics (Cont.)

Output Voltage vs. Output Current

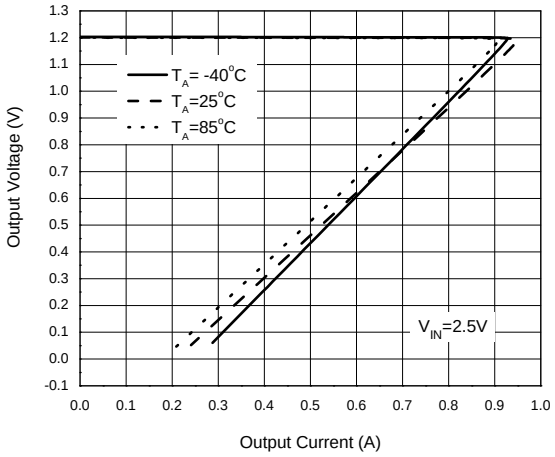

Output Voltage vs. Output Current

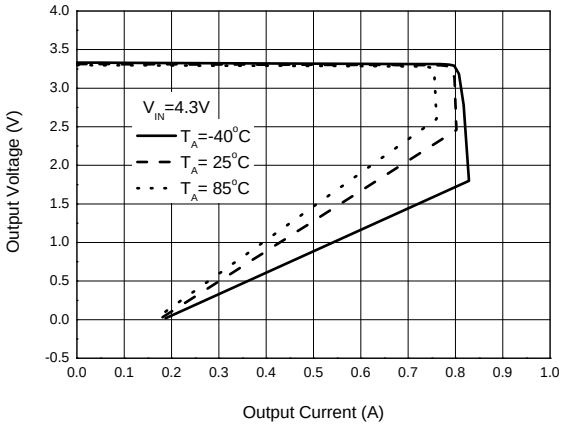

Output Voltage vs. Output Current

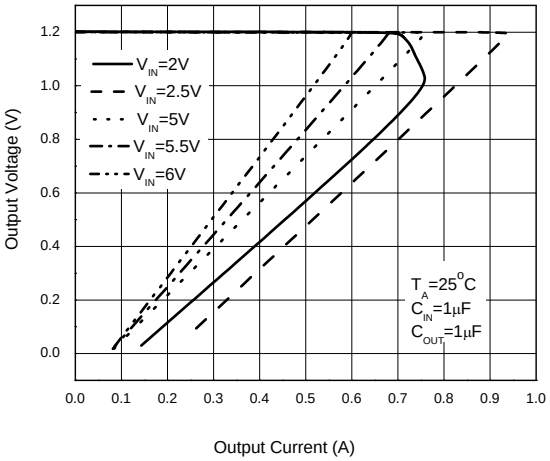

Output Voltage vs. Output Current

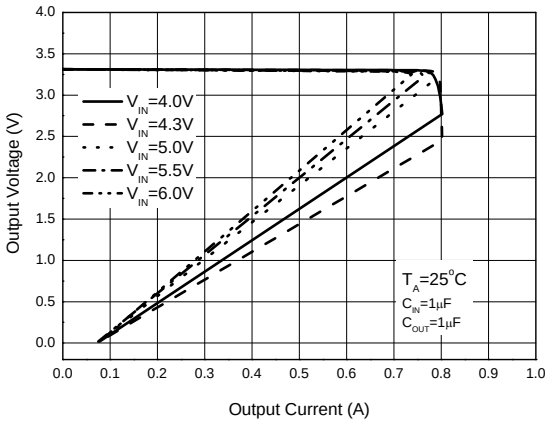

Dropout Voltage vs. Output Current

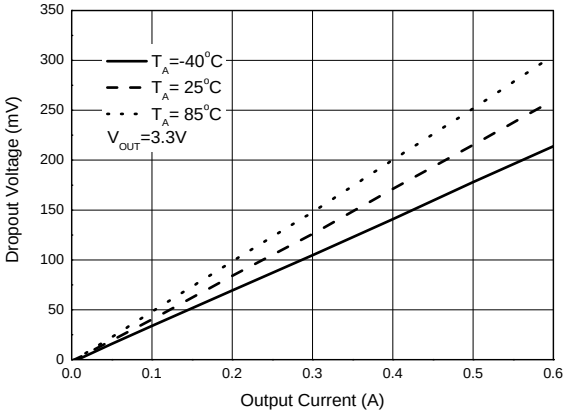

Ground Current vs. Output Current

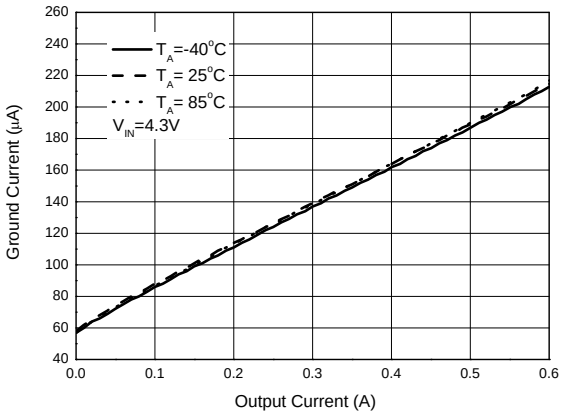

© Diodes Incorporated

Performance Characteristics (Cont.)

PSRR vs. Frequency

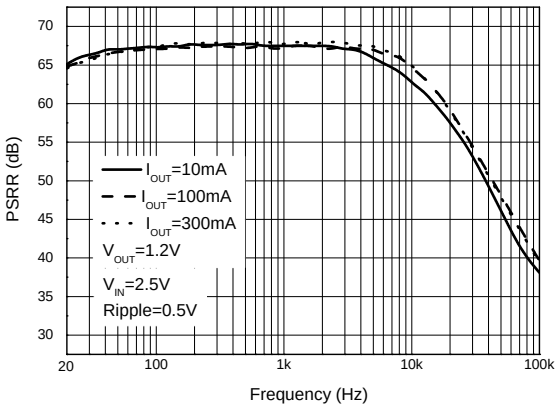

Load Transient

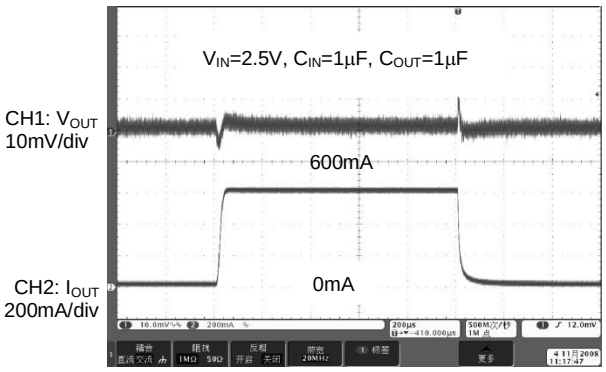

Enable On

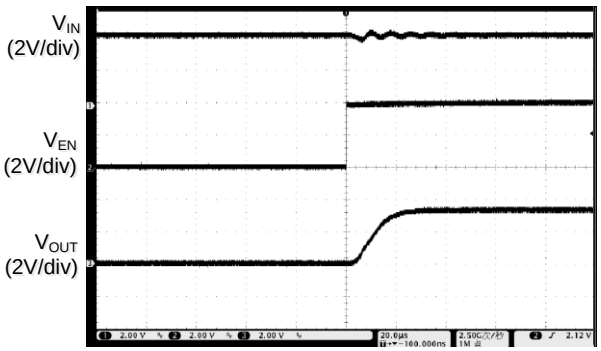

20μs/div

Enable Off

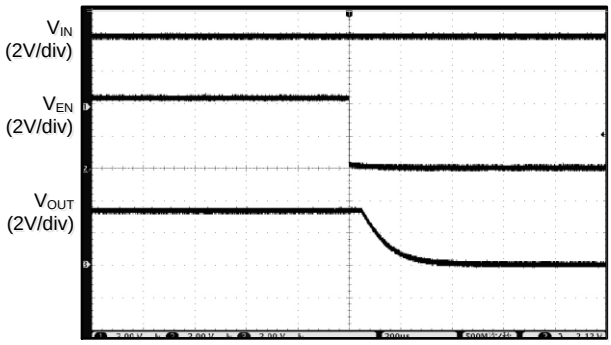

200μs/div

Application Note

In some unusual applications where a current load could be present at the output before the part is enabled the fold back current limiting may prevent the part from starting. Applications with multiple supplies or negative supplies need to be evaluated for this possibility. Product testing where a current source is applied before the part is enabled could be another area of concern. With a normal load as shown below there is no interference of the fold back current limiting circuit.

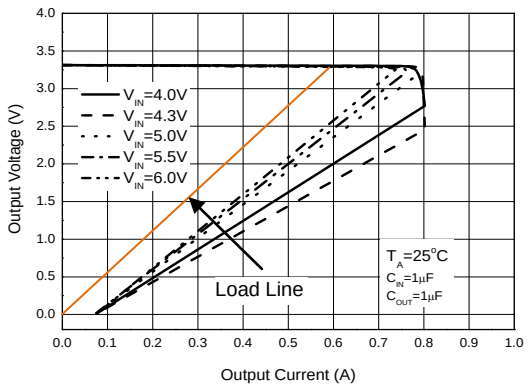

© Diodes Incorporated

Ordering Information

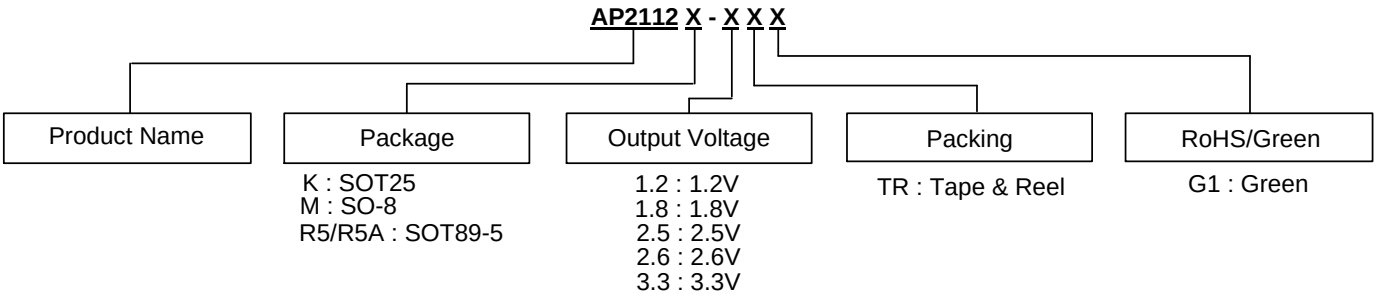

Package	Temperature Range	Condition	Part Number	Marking ID	Packing
SOT25	-40 to +85°C	1.2V	AP2112K-1.2TRG1	G3L	3000/7”/Tape & Reel
		1.8V	AP2112K-1.8TRG1	G3M	3000/7”/Tape & Reel
		2.5V	AP2112K-2.5TRG1	G3N	3000/7”/Tape & Reel
		2.6V	AP2112K-2.6TRG1	G5N	3000/7”/Tape & Reel
		3.3V	AP2112K-3.3TRG1	G3P	3000/7”/Tape & Reel
SO-8	-40 to +85°C	1.2V	AP2112M-1.2TRG1	2112M-1.2G1	4000/13”/Tape & Reel
		1.8V	AP2112M-1.8TRG1	2112M-1.8G1	4000/13”/Tape & Reel
		2.5V	AP2112M-2.5TRG1	2112M-2.5G1	4000/13”/Tape & Reel
		2.6V	AP2112M-2.6TRG1	2112M-2.6G1	4000/13”/Tape & Reel
		3.3V	AP2112M-3.3TRG1	2112M-3.3G1	4000/13”/Tape & Reel
SOT89-5	-40 to +85°C	1.2V(R5)	AP2112R5-1.2TRG1	G37D	1000/7”/Tape & Reel
		1.8V(R5)	AP2112R5-1.8TRG1	G37E	1000/7”/Tape & Reel
		2.5V(R5)	AP2112R5-2.5TRG1	G37F	1000/7”/Tape & Reel
		2.6V(R5)	AP2112R5-2.6TRG1	G13F	1000/7”/Tape & Reel
		3.3V(R5)	AP2112R5-3.3TRG1	G37G	1000/7”/Tape & Reel
SOT89-5	-40 to +85°C	1.2V(R5A)	AP2112R5A-1.2TRG1	G33C	1000/7”/Tape & Reel
		1.8V(R5A)	AP2112R5A-1.8TRG1	G33E	1000/7”/Tape & Reel
		2.5V(R5A)	AP2112R5A-2.5TRG1	G28G	1000/7”/Tape & Reel
		2.6V(R5A)	AP2112R5A-2.6TRG1	G13E	1000/7”/Tape & Reel
		3.3V(R5A)	AP2112R5A-3.3TRG1	G28H	1000/7”/Tape & Reel

© Diodes Incorporated

Marking Information

(1) SOT25

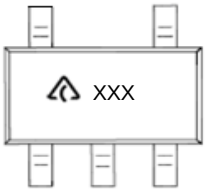

: Logo
XXX : Marking ID (See Ordering Information)

(2) SO-8

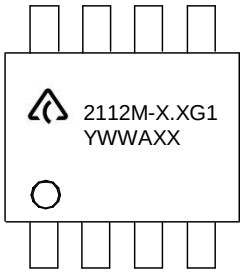

First line: Logo and Marking ID
Second line: Date Code
Y: Year
WW: Work Week of Molding
A: Assembly House Code
XX: 7th and 8th Digits of Batch Number

(3) SOT89-5

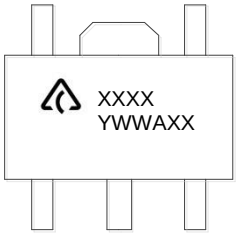

First Line: Logo and Marking ID
Second line: Date Code
Y: Year
WW: Work Week of Molding
A: Assembly House Code
XX: 7th and 8th Digits of Batch Number

© Diodes Incorporated

Package Outline Dimensions (Previously identified as SOT-23-5 for this product)

Please see http://www.diodes.com/package-outlines.html for the latest version.

SOT25

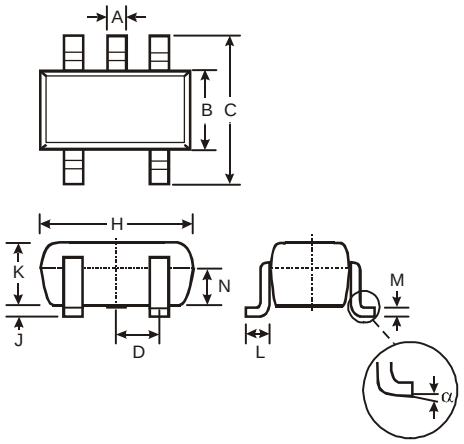

SOT25			
Dim	**Min**	**Max**	**Typ**
A	0.35	0.50	0.38
B	1.50	1.70	1.60
C	2.70	3.00	2.80
D	-	-	0.95
H	2.90	3.10	3.00
J	0.013	0.10	0.05
K	1.00	1.30	1.10
L	0.35	0.55	0.40
M	0.10	0.20	0.15
N	0.70	0.80	0.75
α	0°	8°	-
All Dimensions in mm			

Suggested Pad Layout

Please see http://www.diodes.com/package-outlines.html for the latest version.

SOT25

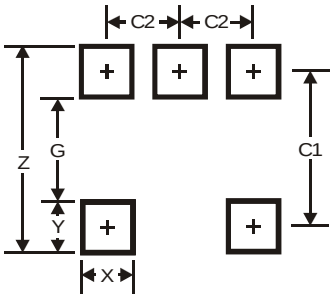

Dimensions	Value
Z	3.20
G	1.60
X	0.55
Y	0.80
C1	2.40
C2	0.95

Note: The suggested land pattern dimensions have been provided for reference only, as actual pad layouts may vary depending on application. These dimensions may be modified based on user equipment capability or fabrication criteria. A more robust pattern may be desired for wave soldering and is calculated by adding 0.2 mm to the 'Z' dimension. For further information, please reference document IPC-7351A, Naming Convention for Standard SMT Land Patterns, and for International grid details, please see document IEC, Publication 97.

Note: For high voltage applications, the appropriate industry sector guidelines should be considered with regards to creepage and clearance distances between device Terminals and PCB tracking.

© Diodes Incorporated

Package Outline Dimensions (All dimensions in mm.) (Previously identified as SOT-89-5 for this product)

SOT89-5

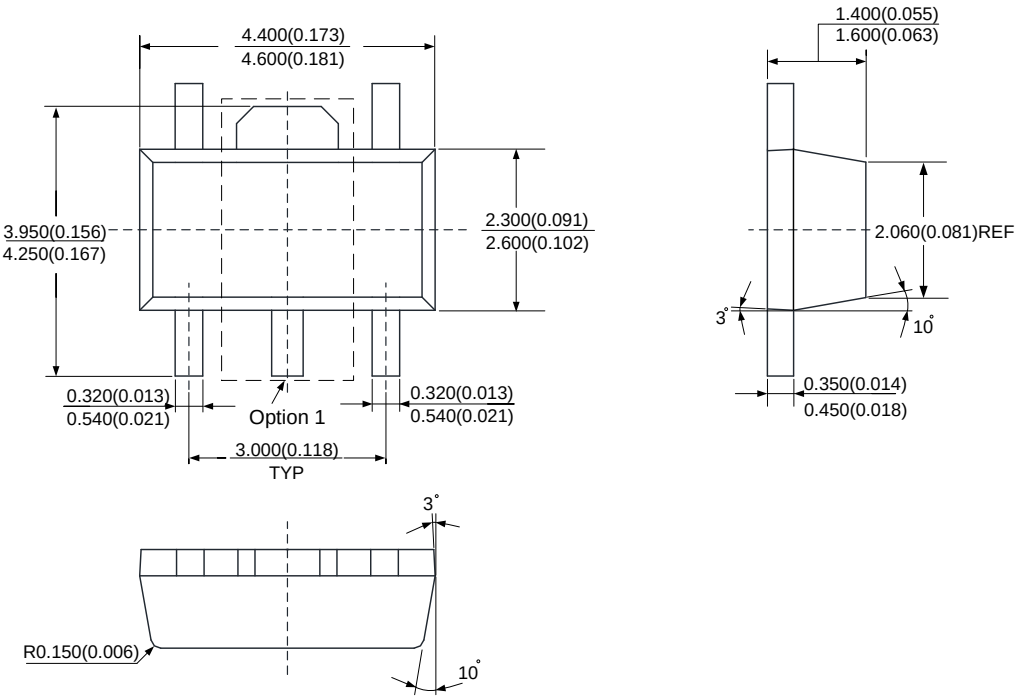

Option 1

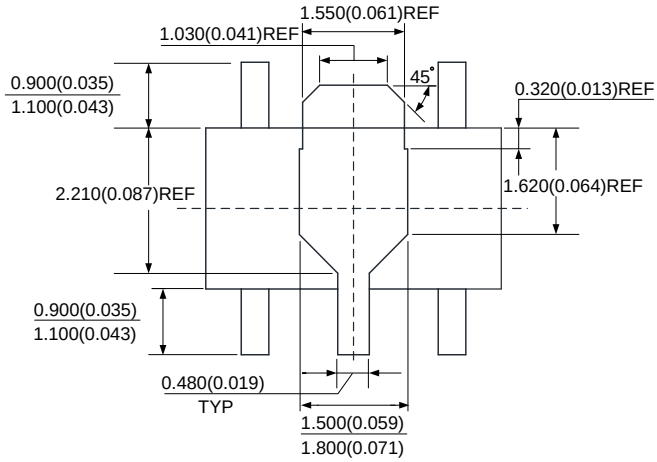

Option 2

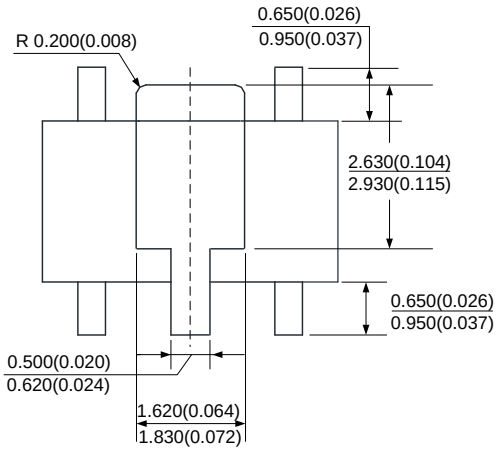

© Diodes Incorporated

Suggested Pad Layout (Previously identified as SOT-89-5 for this product)

SOT89-5

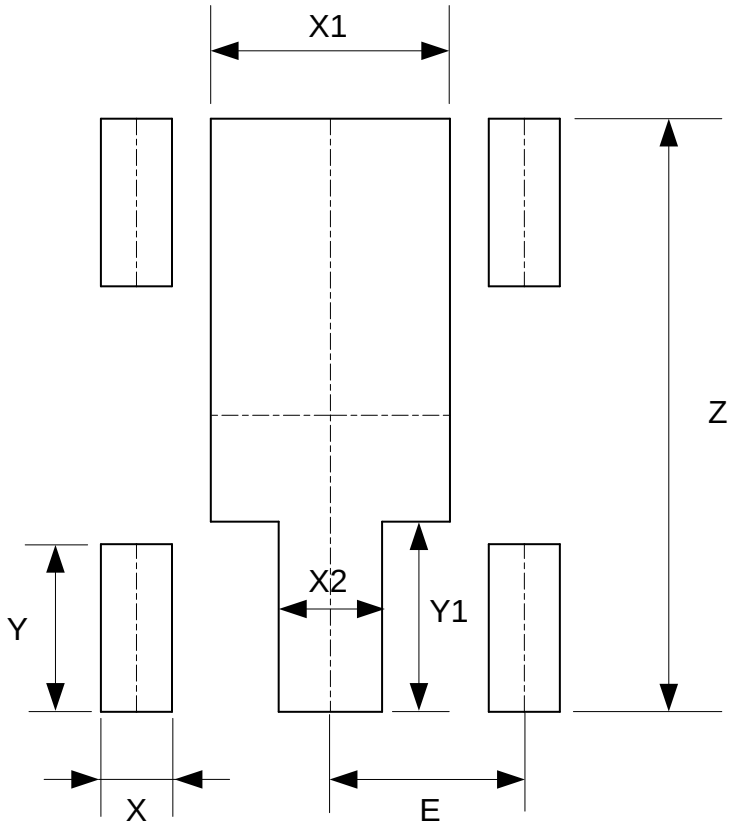

Dimensions	Z (mm)/(inch)	X (mm)/(inch)	X1 (mm)/(inch)	X2 (mm)/(inch)	Y (mm)/(inch)	Y1 (mm)/(inch)	E (mm)/(inch)
Value	4.600/0.181	0.550/0.022	1.850/0.073	0.800/0.031	1.300/0.051	1.475/0.058	1.500/0.059

© Diodes Incorporated

Package Outline Dimensions (Previously identified as SOIC-8 for this product)

Please see http://www.diodes.com/package-outlines.html for the latest version.

SO-8

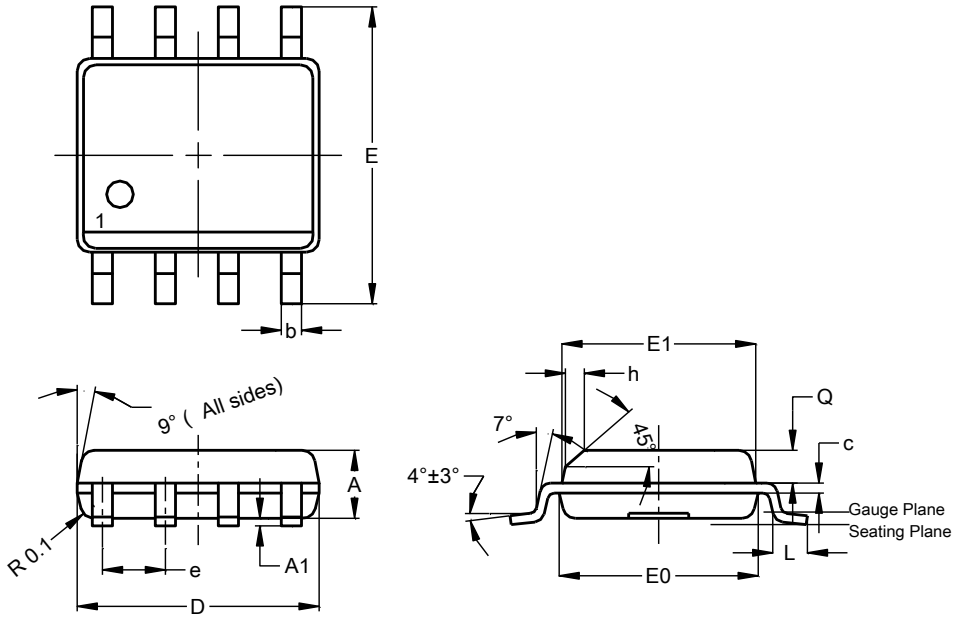

SO-8			
Dim	**Min**	**Max**	**Typ**
A	1.40	1.50	1.45
A1	0.10	0.20	0.15
b	0.30	0.50	0.40
c	0.15	0.25	0.20
D	4.85	4.95	4.90
E	5.90	6.10	6.00
E1	3.80	3.90	3.85
E0	3.85	3.95	3.90
e	--	--	1.27
h	-	--	0.35
L	0.62	0.82	0.72
Q	0.60	0.70	0.65
All Dimensions in mm			

Suggested Pad Layout

Please see http://www.diodes.com/package-outlines.html for the latest version.

SO-8

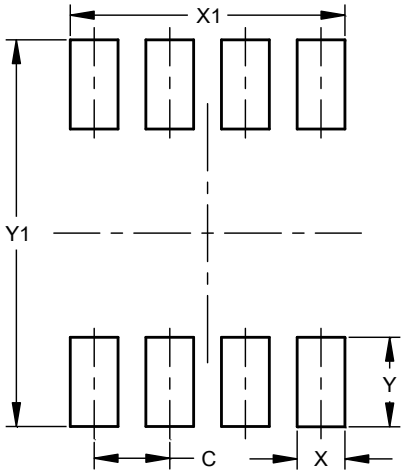

Dimensions	Value (in mm)
C	1.27
X	0.802
X1	4.612
Y	1.505
Y1	6.50

Note: The suggested land pattern dimensions have been provided for reference only, as actual pad layouts may vary depending on application. These dimensions may be modified based on user equipment capability or fabrication criteria. A more robust pattern may be desired for wave soldering and is calculated by adding 0.2 mm to the 'Z' dimension. For further information, please reference document IPC-7351A, Naming Convention for Standard SMT Land Patterns, and for International grid details, please see document IEC, Publication 97.

Note: For high voltage applications, the appropriate industry sector guidelines should be considered with regards to creepage and clearance distances between device Terminals and PCB tracking.

© Diodes Incorporated

IMPORTANT NOTICE

DIODES INCORPORATED MAKES NO WARRANTY OF ANY KIND, EXPRESS OR IMPLIED, WITH REGARDS TO THIS DOCUMENT, INCLUDING, BUT NOT LIMITED TO, THE IMPLIED WARRANTIES OF MERCHANTABILITY AND FITNESS FOR A PARTICULAR PURPOSE (AND THEIR EQUIVALENTS UNDER THE LAWS OF ANY JURISDICTION).

Diodes Incorporated and its subsidiaries reserve the right to make modifications, enhancements, improvements, corrections or other changes without further notice to this document and any product described herein. Diodes Incorporated does not assume any liability arising out of the application or use of this document or any product described herein; neither does Diodes Incorporated convey any license under its patent or trademark rights, nor the rights of others. Any Customer or user of this document or products described herein in such applications shall assume all risks of such use and will agree to hold Diodes Incorporated and all the companies whose products are represented on Diodes Incorporated website, harmless against all damages.

Diodes Incorporated does not warrant or accept any liability whatsoever in respect of any products purchased through unauthorized sales channel. Should Customers purchase or use Diodes Incorporated products for any unintended or unauthorized application, Customers shall indemnify and hold Diodes Incorporated and its representatives harmless against all claims, damages, expenses, and attorney fees arising out of, directly or indirectly, any claim of personal injury or death associated with such unintended or unauthorized application.

Products described herein may be covered by one or more United States, international or foreign patents pending. Product names and markings noted herein may also be covered by one or more United States, international or foreign trademarks.

This document is written in English but may be translated into multiple languages for reference. Only the English version of this document is the final and determinative format released by Diodes Incorporated.

LIFE SUPPORT

Diodes Incorporated products are specifically not authorized for use as critical components in life support devices or systems without the express written approval of the Chief Executive Officer of Diodes Incorporated. As used herein:

A. Life support devices or systems are devices or systems which:

1. are intended to implant into the body, or

2. support or sustain life and whose failure to perform when properly used in accordance with instructions for use provided in the labeling can be reasonably expected to result in significant injury to the user.

B. A critical component is any component in a life support device or system whose failure to perform can be reasonably expected to cause the failure of the life support device or to affect its safety or effectiveness.

Customers represent that they have all necessary expertise in the safety and regulatory ramifications of their life support devices or systems, and acknowledge and agree that they are solely responsible for all legal, regulatory and safety-related requirements concerning their products and any use of Diodes Incorporated products in such safety-critical, life support devices or systems, notwithstanding any devices- or systems-related information or support that may be provided by Diodes Incorporated. Further, Customers must fully indemnify Diodes Incorporated and its representatives against any damages arising out of the use of Diodes Incorporated products in such safety-critical, life support devices or systems.

Copyright © 2017, Diodes Incorporated

www.diodes.com

ENTEGRECİ

Bu belge www.entegreci.com üzerinden sunulmaktadır.

Elektronik komponent tedarikinde Entegreci

Entegreci, Eskişehir merkezli, Türkiye geneline satış yapan bir elektronik komponent mağazasıdır. Entegreler (IC), mikrodenetleyiciler, transistörler, diyotlar, pasif elemanlar, konnektörler, modüller ve geliştirme kartları tek adetten seri üretim adetlerine kadar satılır. Ürün sayfalarında güncel stok durumunu, fiyatı ve datasheet bağlantısını bulabilirsiniz.

Parça koduyla arama

Üretici parça numarasını yazın; stok ve fiyatı hemen görün.

www.entegreci.com

Ürün kategorileri

Entegreden kapasitöre tüm elektronik komponent kategorileri.

Kategorilere göz atın

Üreticiler

Aradığınız üreticinin ürünlerini tek sayfada inceleyin.

Üreticileri görün

Toplu alım ve teklif

Listede olmayan ya da yüksek adetli parçalar için teklif isteyin.

Teklif isteyin

www.entegreci.com | **destek@entegreci.com** | **0850 305 90 34**

Entegreci is an online electronic components store based in Türkiye. Search by manufacturer part number to see stock, prices and datasheets for integrated circuits, microcontrollers, transistors, passive components and connectors, or request a quote for parts that are not listed.

Bu sayfa Entegreci tarafından eklenmiştir. Belgenin önceki sayfaları asıl yayıncısına aittir ve içeriği değiştirilmemiştir; en güncel sürüm için belgenin yayıncısına başvurun.