300mA HIGH SPEED, EXTREMELY LOW NOISE CMOS LDO REGULATOR

Description

The AP2127 Series are positive voltage regulator ICs fabricated by CMOS process.

The AP2127 Series have features of low dropout voltage, low noise, high output voltage accuracy, and low current consumption which make them ideal for use in various battery-powered devices.

The AP2127 has 1.0V, 1.2V, 1.5V, 1.8V, 2.5V, 2.8V, 3.0V, 3.3V, 4.2V, and 4.75V fixed voltage versions and 0.8V to 5.5V adjustable voltage versions.

The AP2127 Series are available in SOT-23 (for fixed versions only), SOT-23-3 (for fixed versions only), SOT-23-5, SOT-89 (for fixed versions only) packages.

Features

- Wide Operating Voltage: 2.5V to 6V
- High Output Voltage Accuracy: ±2%
- High Ripple Rejection:
  68dB @ f = 1kHz, 54dB @ f = 10kHz
- Low Standby Current: 0.1μA
- Low Dropout Voltage: 170mV @ 300mA for V_{OUT} = 3.3V,
  140mV @ 300mA for V_{OUT} = 4.75V
- Low Quiescent Current: 60μA Typical
- Low Output Noise: 60μV_{RMS} @V_{OUT} = 0.8V
- Short Current Limit: 50mA
- Over Temperature Protection
- Compatible with Low ESR Ceramic Capacitor:
  1μF for C_{IN} and C_{OUT}
- Excellent Line/Load Regulation
- Soft Start Time: 50μs
- Auto Discharge Resistance: $R_{DS(ON)}$ = 60Ω
- **Totally Lead-Free & Fully RoHS Compliant (Notes 1 & 2)**
- **Halogen and Antimony Free. "Green" Device (Note 3)**

Pin Assignments

(Top View)

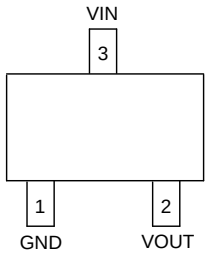

SOT-23/SOT-23-3

(Top View)

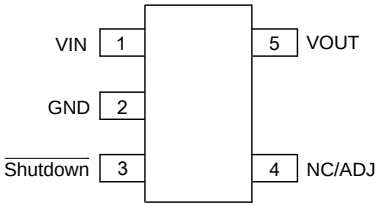

SOT-23-5

(Top View)

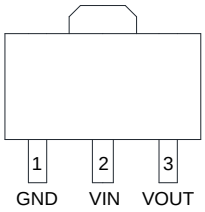

SOT-89

Applications

- Datacom
- Notebook Computers
- Mother Board

Notes:
1. No purposely added lead. Fully EU Directive 2002/95/EC (RoHS) & 2011/65/EU (RoHS 2) compliant.
2. See http://www.diodes.com/quality/lead_free.html for more information about Diodes Incorporated's definitions of Halogen- and Antimony-free, "Green" and Lead-free.
3. Halogen- and Antimony-free "Green" products are defined as those which contain <900ppm bromine, <900ppm chlorine (<1500ppm total Br + Cl) and <1000ppm antimony compounds.

© Diodes Incorporated

Typical Applications Circuit

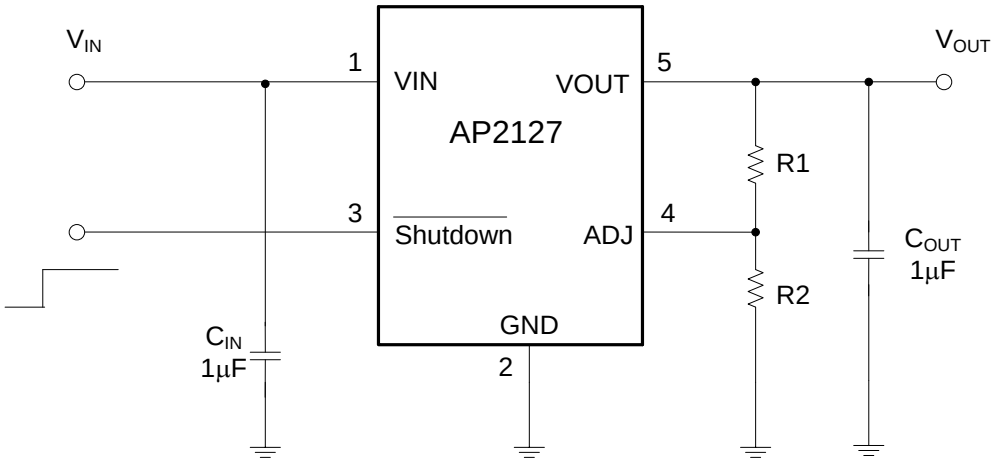

V_{OUT} = 0.8(1+R1/R2)V

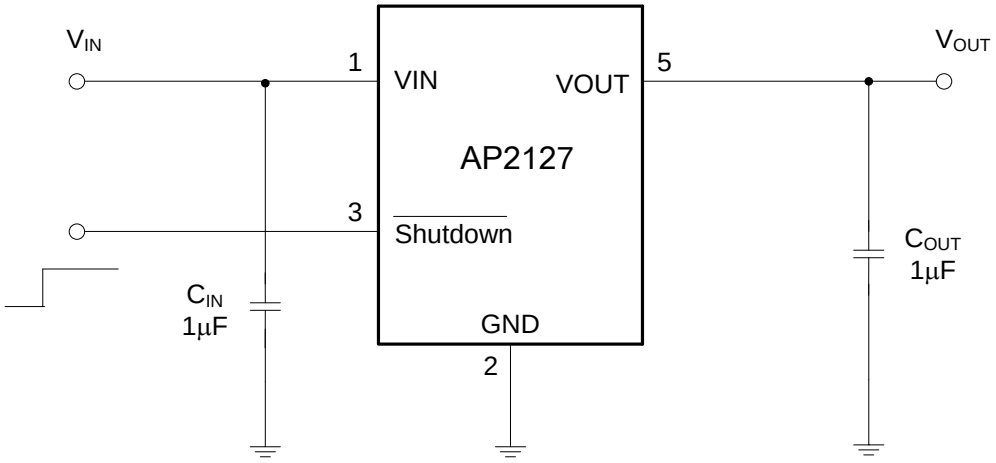

For Fixed Voltage Versions

© Diodes Incorporated

Pin Descriptions

Pin Name	Pin Number			Function
	SOT-23 SOT-23-3	SOT-23-5	SOT-89	
VIN	3	1	2	Power Input
VOUT	2	5	3	Power Output
GND	1	2	1	Ground
NC/ADJ	—	4	—	No Connection / VOUT feedback input, connect resistor divider.
$\overline{\text{Shutdown}}$	—	3	—	Enable Input.
PAD	—	—	—	Exposed PAD for thermal performance improvement connect to GND

Functional Block Diagram

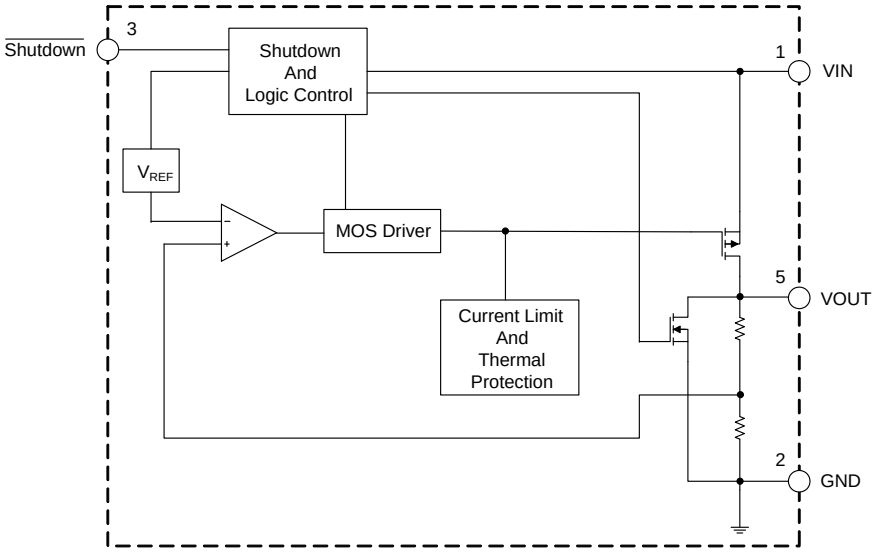

Fixed Version (SOT-23-5 Package)

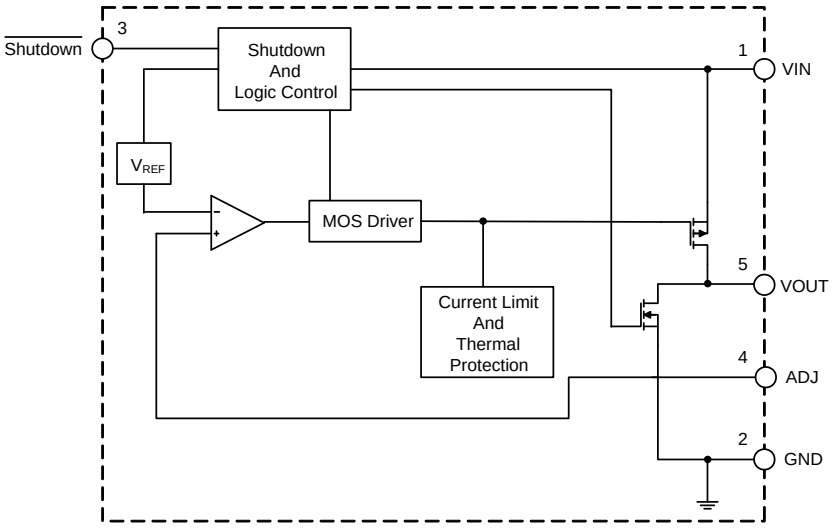

Adjustable Version (SOT-23-5 Package)

© Diodes Incorporated

Absolute Maximum Ratings (Note 4) (@T_A = +25°C, unless otherwise specified.)

Symbol	Parameter	Value		Unit
V_{IN}	Input Voltage	6.5		V
V_{CE}	Shutdown Input Voltage	-0.3 to V_{IN} +0.3		V
I_{OUT}	Output Current	450		mA
T_J	Junction Temperature	+150		°C
T_{STG}	Storage Temperature Range	-65 to +150		°C
T_{LEAD}	Lead Temperature (Soldering, 10sec)	+260		°C
θ_{JA}	Thermal Resistance (Junction to Ambient)	SOT-23	180	°C/W
		SOT-23-3	250	
		SOT-23-5	250	
		SOT-89	100	
ESD	ESD (Human Body Model)	6000		V
ESD	ESD (Machine Model)	200		V

Note: 4. Stresses greater than those listed under "Absolute Maximum Ratings" may cause permanent damage to the device. These are stress ratings only, and functional operation of the device at these or any other conditions beyond those indicated under "Recommended Operating Conditions" is not implied. Exposure to "Absolute Maximum Ratings" for extended periods may affect device reliability.

Recommended Operating Conditions (@T_A = +25°C, unless otherwise specified.)

Symbol	Parameter	Min	Max	Unit
V_{IN}	Input Voltage	2.5	6	V
T_A	Operating Ambient Temperature Range	-40	+85	°C

© Diodes Incorporated

Electrical Characteristics

(V_{IN} = 2.5V (for 0.8V to 1.8V voltage versions), V_{IN} = V_{OUT} +1V (for 2.5V to 4.75V voltage versions), V_{IN} = 6V @ V_{OUT} = 4.75V, T_A = +25°C, C_{IN} = 1µF, C_{OUT} = 1µF, **Bold** typeface applies over -40°C ≤ T_A ≤ +85°C, unless otherwise specified.)

Symbol	Parameter	Conditions		Min	Typ	Max	Unit
V_{REF}	Reference Voltage	V_{IN} = V_{OUT} +1V 1mA ≤ I_{OUT} ≤ 300mA		0.784	0.8	0.816	V
V_{OUT}	Output Voltage	V_{IN} = V_{OUT} +1V 1mA ≤ I_{OUT} ≤ 300mA		98% x V_{OUT}	—	102% x V_{OUT}	V
V_{IN}	Input Voltage	—		2.5	—	6	V
$I_{OUT(MAX)}$	Maximum Output Current	V_{IN} - V_{OUT} = 1V V_{OUT} = 0.98 x V_{OUT}		300	400	—	mA
ΔV_{OUT}	Load Regulation	V_{IN} - V_{OUT} = 1V 1mA ≤ I_{OUT} ≤ 300mA		—	4	10	mV
ΔV_{OUT}	Line Regulation	V_{OUT} + 0.5V ≤ V_{IN} ≤ 6V I_{OUT} = 30mA		—	0.5	5	mV
V_{DROP}	Dropout Voltage	V_{OUT} = 1.0V, I_{OUT} = 300mA		—	1400	1500	mV
		V_{OUT} = 1.2V, I_{OUT} = 300mA		—	1200	1300	
		V_{OUT} = 1.5V, I_{OUT} = 300mA		—	900	1000	
		V_{OUT} = 1.8V, I_{OUT} = 300mA		—	600	700	
		V_{OUT} = 2.5V, 2.8V, 3.0V, 3.3V, 4.2V, I_{OUT} = 300mA		—	170	300	
		V_{OUT} = 4.75V, I_{OUT} = 300mA		—	140	300	
I_Q	Quiescent Current	V_{IN} = V_{OUT} +1V, I_{OUT} = 0mA		—	60	90	µA
I_{STD}	Standby Current	V_{IN} = V_{OUT} +1V $V_{SHUTDOWN}$ in off mode		—	0.1	1.0	µA
PSRR	Power Supply Rejection Ration	AP2127-1.0V to 4.2V, Ripple $1V_{P-P}$ V_{IN} = V_{OUT} +1V	f = 100Hz	—	68	—	dB
			f = 1kHz	—	68	—	dB
			f = 10kHz	—	54	—	dB
		AP2127-4.75V, Ripple $0.5V_{P-P}$ V_{IN} = V_{OUT} +1V	f = 100Hz	—	63	—	dB
			f = 1kHz	—	63	—	dB
			f = 10kHz	—	45	—	dB
$\Delta V_{OUT}/V_{OUT}$ /ΔT	Output Voltage Temperature Coefficient	I_{OUT} = 30mA, -40°C ≤ T_A ≤ +85°C		—	**±100**	—	ppm/°C
I_{SHORT}	Short Current Limit	V_{OUT} = 0V		—	50	—	mA
t_{SS}	Soft Start Time	–		—	50	—	µs
V_{NOISE}	RMS Output Noise	T_A = +25°C, 10Hz ≤ f ≤ 100kHz, V_{OUT} = 0.8V		—	60	—	μV_{RMS}
—	Shutdown High Voltage	Shutdown Input Voltage High		**1.5**	—	—	V
—	Shutdown Low Voltage	Shutdown Input Voltage Low		—	—	**0.5**	V
—	V_{OUT} Discharge MOSFET $R_{DS(ON)}$	Shutdown Input Voltage Low		—	60	—	Ω
—	Shutdown Pull Down Resistance	—		—	3	—	MΩ
—	Thermal Shutdown	—		—	+165	—	°C
—	Thermal Shutdown Hysteresis	—		—	+30	—	
θ_{JC}	Thermal Resistance	SOT-23		—	100	—	°C/W
		SOT-23-3		—	150	—	
		SOT-23-5		—	150	—	
		SOT-89		—	75	—	

© Diodes Incorporated

Performance Characteristics (Note 5)

Output Voltage vs. Case Temperature

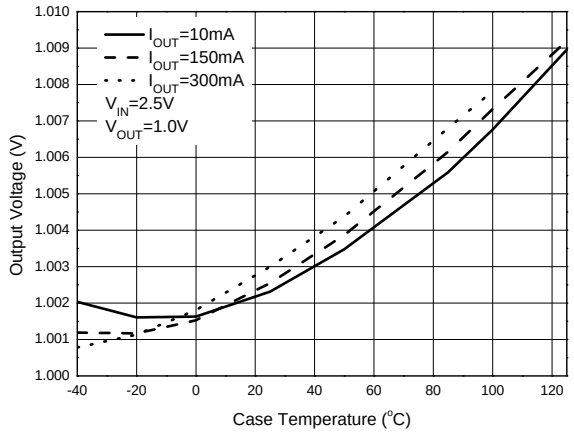

Output Voltage vs. Case Temperature

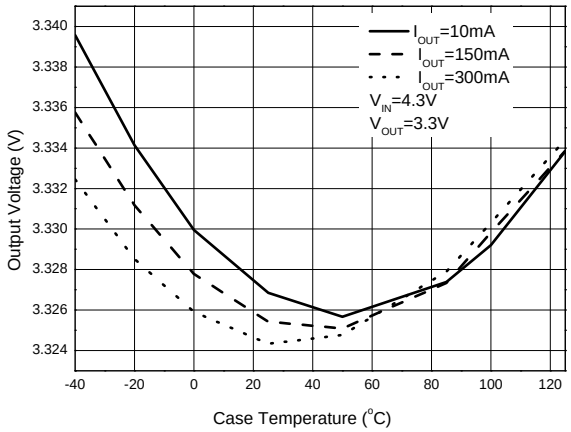

Output Voltage vs. Case Temperature

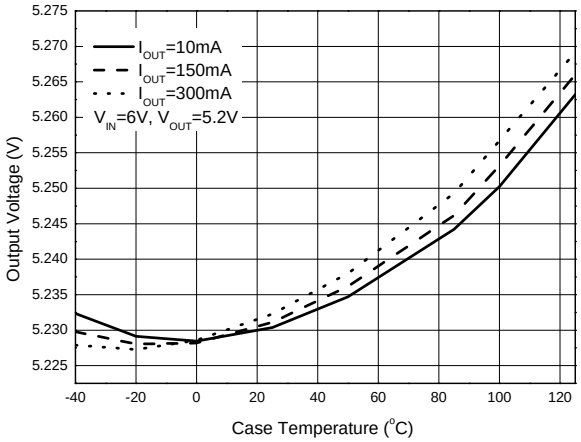

Output Voltage vs. Input Voltage

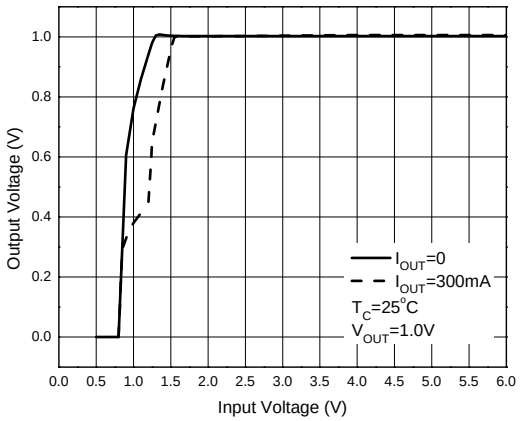

Output Voltage vs. Input Voltage

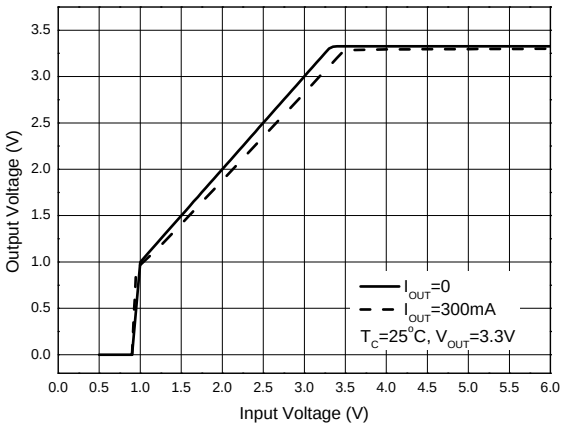

Output Voltage vs. Input Voltage

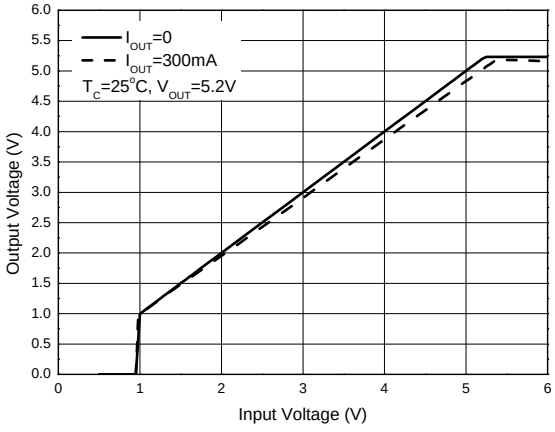

Note 5: Maximum output of 4.75V passed qualification test. Performance Characteristics for 5.2V are for reference only.

© Diodes Incorporated

Performance Characteristics (Cont.) (Note 5)

Output Voltage vs. Output Current

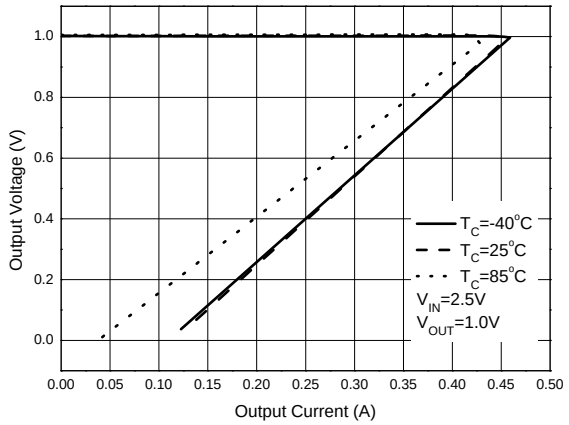

Output Voltage vs. Output Current

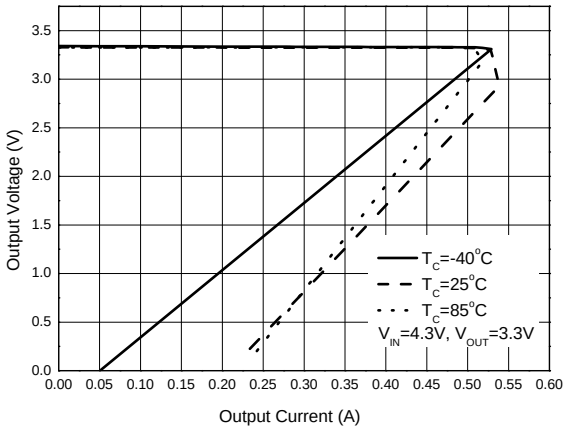

Output Voltage vs. Output Current

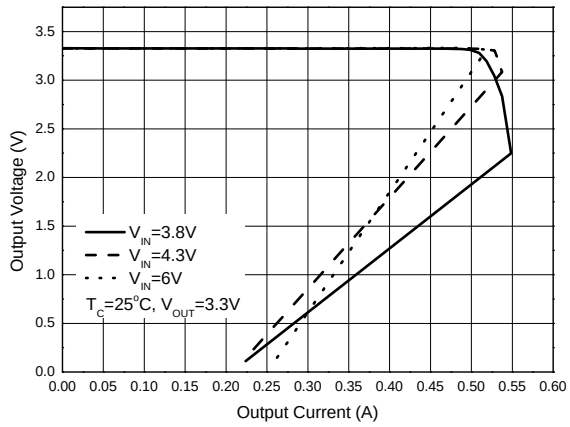

Output Voltage vs. Output Current

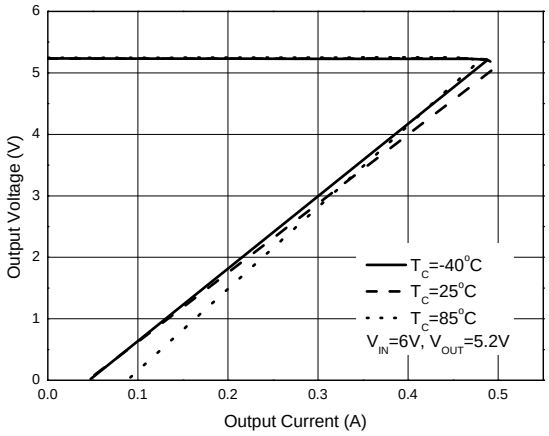

Quiescent Current vs. Input Voltage

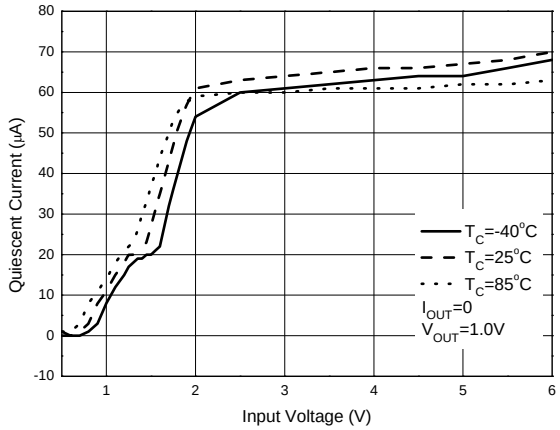

Quiescent Current vs. Input Voltage

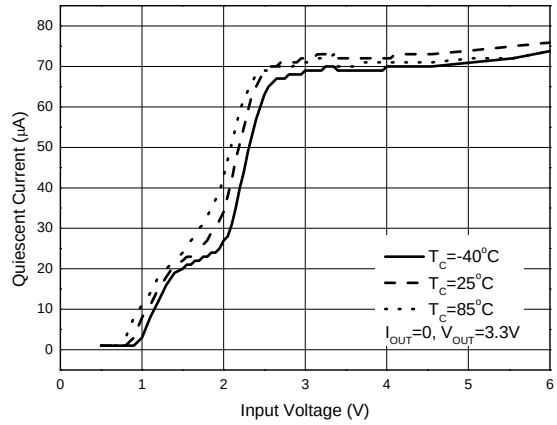

Note 5: Maximum output of 4.75V passed qualification test. Performance Characteristics for 5.2V are for reference only.

© Diodes Incorporated

Performance Characteristics (Cont.) (Note 5)

Quiescent Current vs. Input Voltage

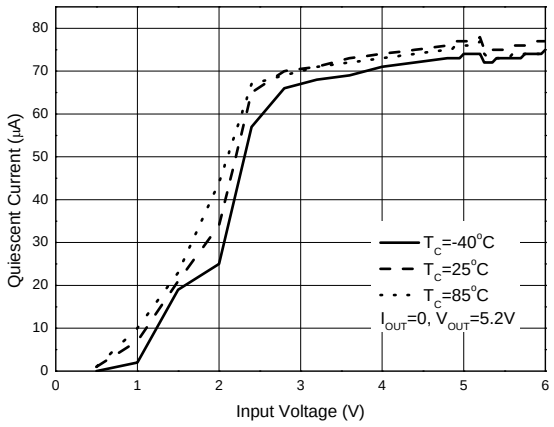

Quiescent Current vs. Output Current

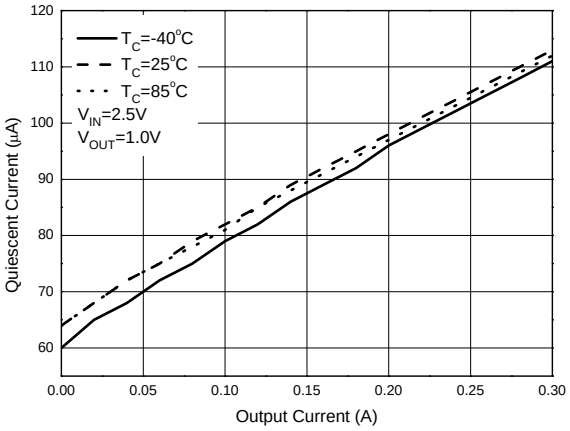

Quiescent Current vs. Output Current

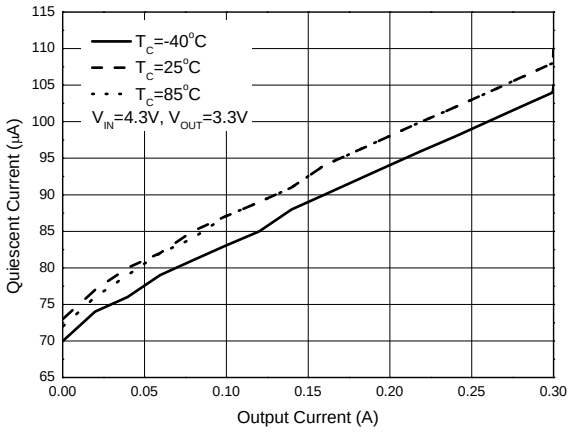

Quiescent Current vs. Output Current

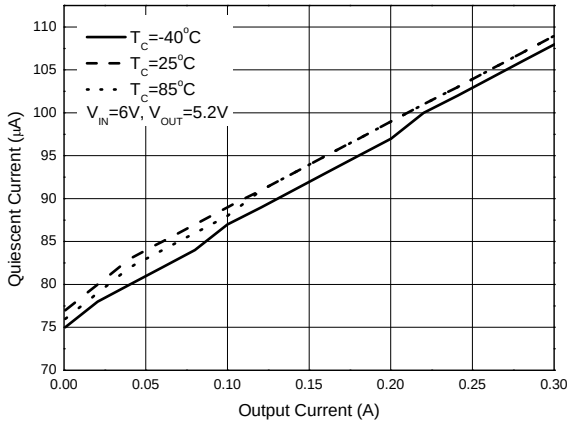

Quiescent Current vs. Case Temperature

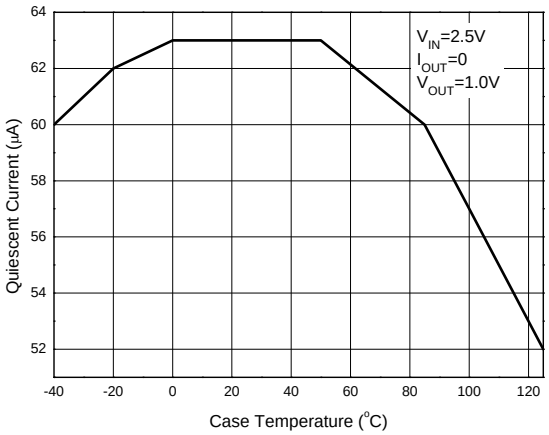

Quiescent Current vs. Case Temperature

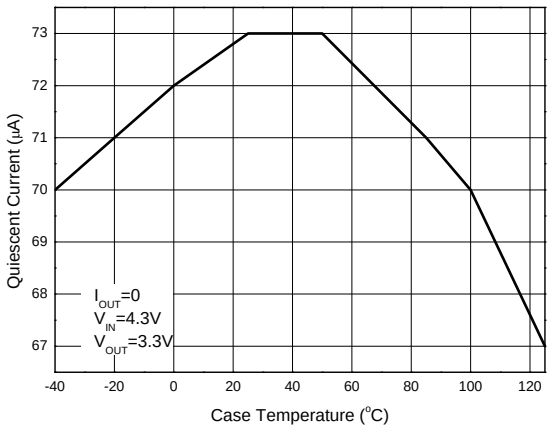

Note 5: Maximum output of 4.75V passed qualification test. Performance Characteristics for 5.2V are for reference only.

© Diodes Incorporated

Performance Characteristics (Cont.) (Note 5)

Quiescent Current vs. Case Temperature

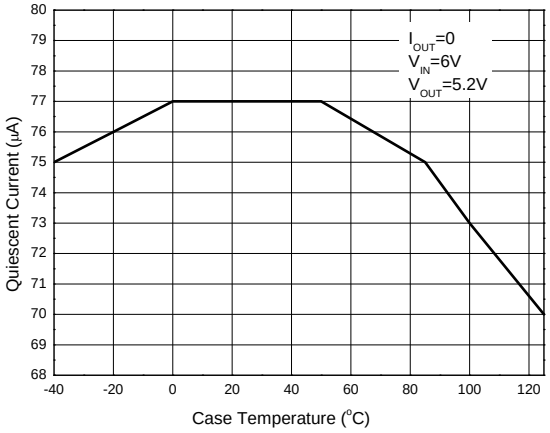

Dropout Voltage vs. Output Current

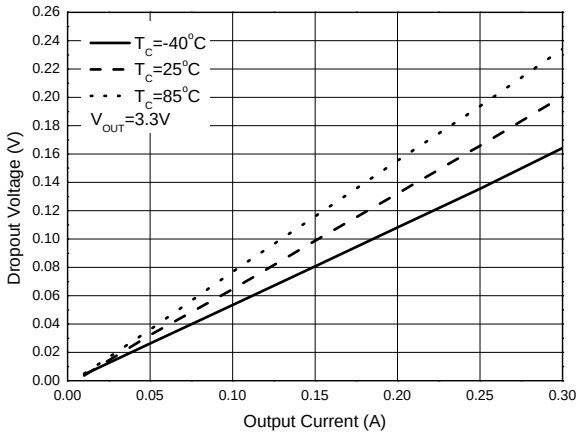

Dropout Voltage vs. Output Current

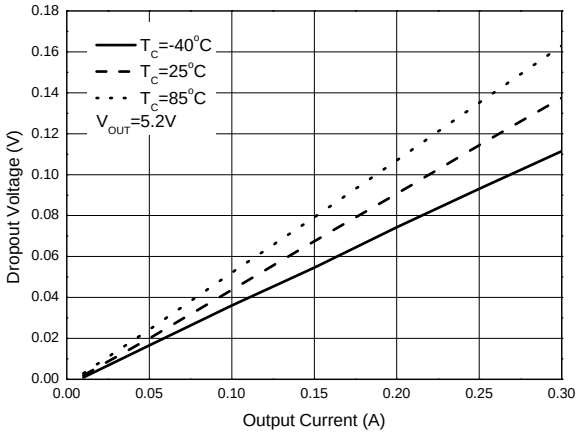

Dropout Voltage vs. Case Temperature

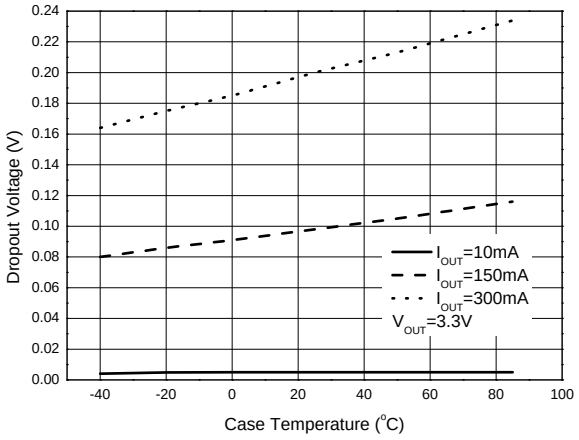

Dropout Voltage vs. Case Temperature

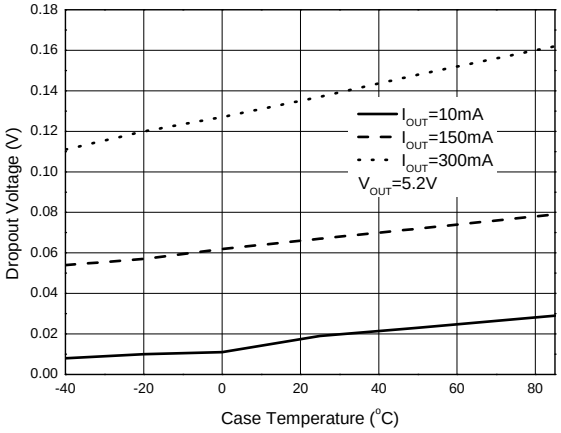

Power Dissipation vs. Case Temperature

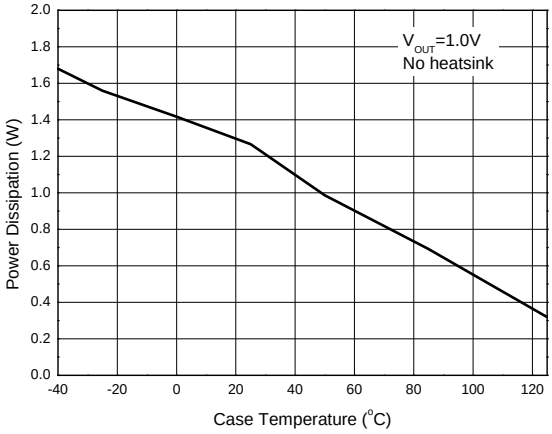

Note 5: Maximum output of 4.75V passed qualification test. Performance Characteristics for 5.2V are for reference only.

© Diodes Incorporated

Performance Characteristics (Cont.) (Note 5)

Line Transient
(Condition: C_{IN} = C_{OUT} =1μF, I_{OUT}=10mA, V_{IN}=2.5V to 3.3V, V_{OUT}=1V)

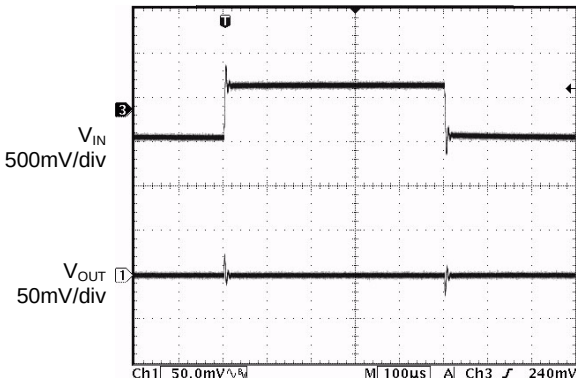

Load Transient
(Condition: C_{IN}=C_{OUT}=1μF, Slew Rate=20mA/μs, V_{IN}=2.5V, V_{OUT}=1V, I_{OUT}=10mA to 300mA)

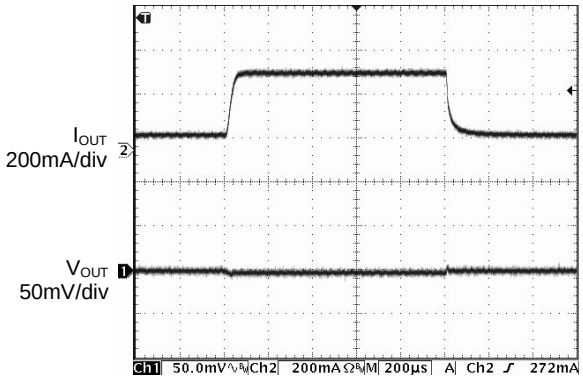

Load Transient
(Condition: C_{IN}=C_{OUT}=1μF, I_{OUT}=10mA to 300mA, V_{IN}=4.3V, V_{OUT}=3.3V)

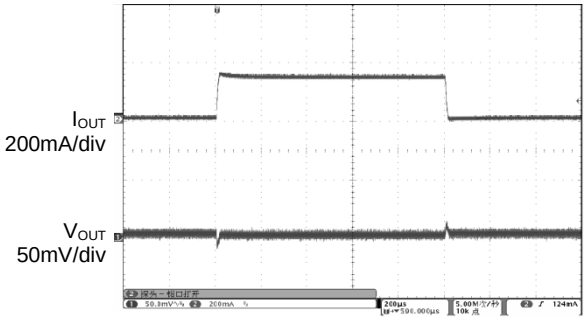

Load Transient
(Condition: C_{IN}=C_{OUT}=1μF, Slew Rate=20mA/μs, V_{IN}=6V, V_{OUT}=5.2V, I_{OUT}=10mA to 300mA)

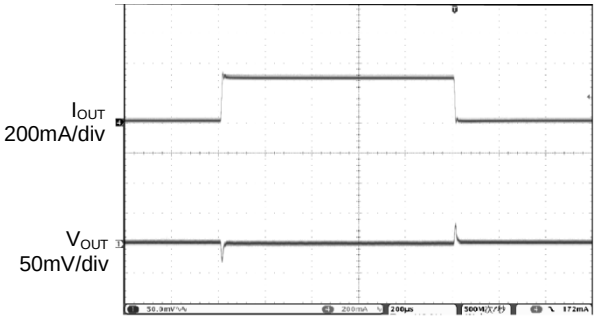

PSRR vs. Frequency
(Condition: C_{IN}=C_{OUT}=1μF, V_{IN}=2.5V, V_{OUT}=1V Ripple=1V_{PP})

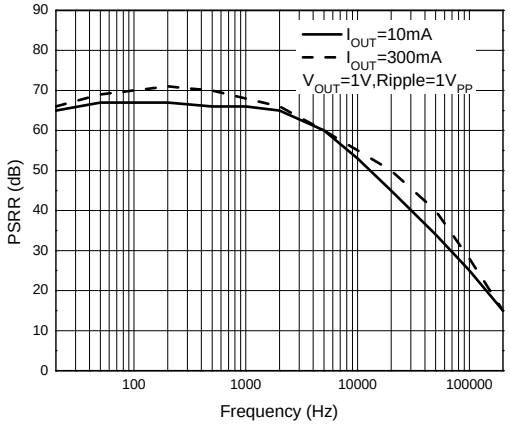

PSRR vs. Frequency
(Condition: C_{IN}=C_{OUT}=1μF, V_{IN}=4.3V, V_{OUT}=3.3V, Ripple=1V_{PP})

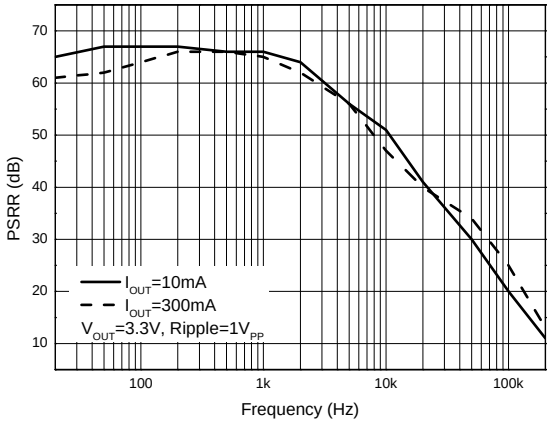

Note 5: Maximum output of 4.75V passed qualification test. Performance Characteristics for 5.2V are for reference only.

© Diodes Incorporated

Performance Characteristics (Cont.) (Note 5)

PSRR vs. Frequency (Condition: C_{IN}=C_{OUT}=1μF, V_{IN}=6V, V_{OUT}=5.2V, Ripple=0.5V_{PP})

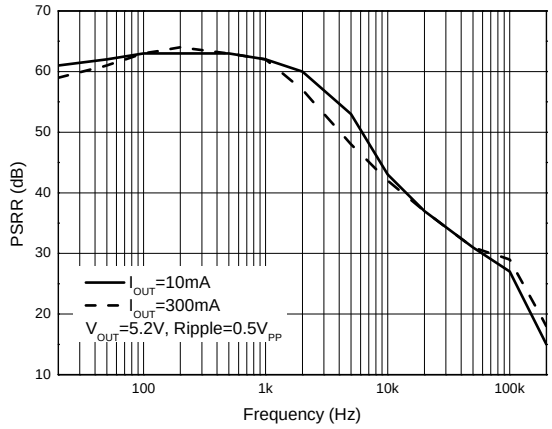

Region of Stable C_{OUT} ESR vs. Output Current (C_{OUT} = 1μF)

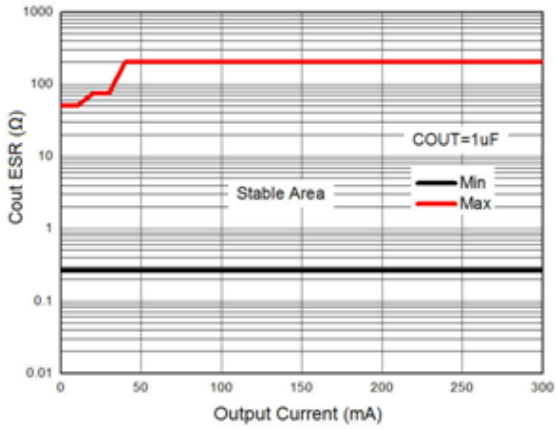

Region of Stable C_{OUT} ESR vs. Output Current (C_{OUT} = 4.7μF)

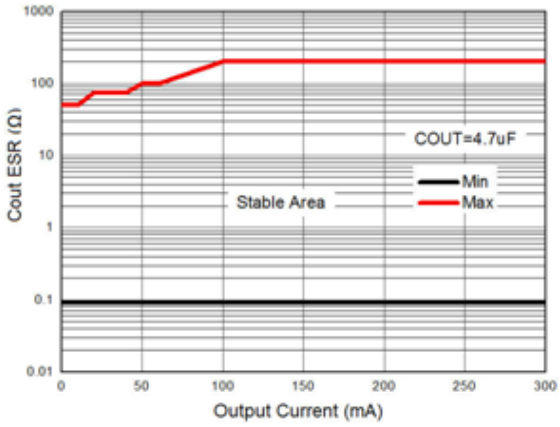

Note 5: Maximum output of 4.75V passed qualification test. Performance Characteristics for 5.2V are for reference only.

© Diodes Incorporated

Application Notes

Input Capacitor

A 1μF ceramic capacitor is recommended to connect between VIN and GND pins to decouple input power supply glitch and noise. The amount of the capacitance may be increased without limit. This input capacitor must be located as close as possible to the device to assure input stability and less noise. For PCB layout, a wide copper trace is required for both V_{IN} and GND.

Output Capacitor

The output capacitor is required to stabilize and help transient response for LDO. The AP2127 is stable with very small ceramic output capacitor with a low ESR 1μF or higher of X7R or X5R MLCC capacitor, which will be sufficient at full temperature ranges. Additional capacitance helps to reduce undershoot and overshoot during transient. Place output capacitor as close as possible to VOUT and GND pins, and keep the leads as short as possible.

Adjustable Operation

For adjustable version, the output voltage is calculated by:

$$V_{OUT} = V_{REF}\left(1+\frac{R_1}{R_2}\right)$$

Where V_{REF} = 0.8V (the internal reference voltage)

Rearranging the equation will give the following that is used for adjusting the output to a particular voltage:

$$R_1 = R_2\left(\frac{V_{OUT}}{V_{REF}}-1\right)$$

For AP2127, the resistor at the low side (R_2) can be selected from 5kΩ to 200kΩ.

In order to improve the stability and to decrease the noise level of the adjustable version, a feed-forward capacitor is suggested to be placed between VOUT and ADJ pins (Figure 1). It's recommended that this feed-forward capacitor value can be calculated as:

$$0.7kHz \le \frac{1}{2\pi \times R_1 \times C_{ff}} \le 15kHz$$

The recommended value of the feed-forward capacitor for different resistor divider ratios is shown in the table below.

Output Voltage	R1	R2	C_{ff}
1.2V	7.5kΩ	15kΩ	2.7nF
1.6V	7.5kΩ	7.5kΩ	2.7nF
1.8V	22.5kΩ	18kΩ	1nF
1.9V	7.5kΩ	5.49kΩ	2.7nF
2.5V	38.3kΩ	18kΩ	560pF
3.3V	56.2kΩ	18kΩ	390pF
4.0V	120kΩ	30.1kΩ	180pF

Table 1. Output Voltage Setting Guide

© Diodes Incorporated

Application Notes (Cont.)

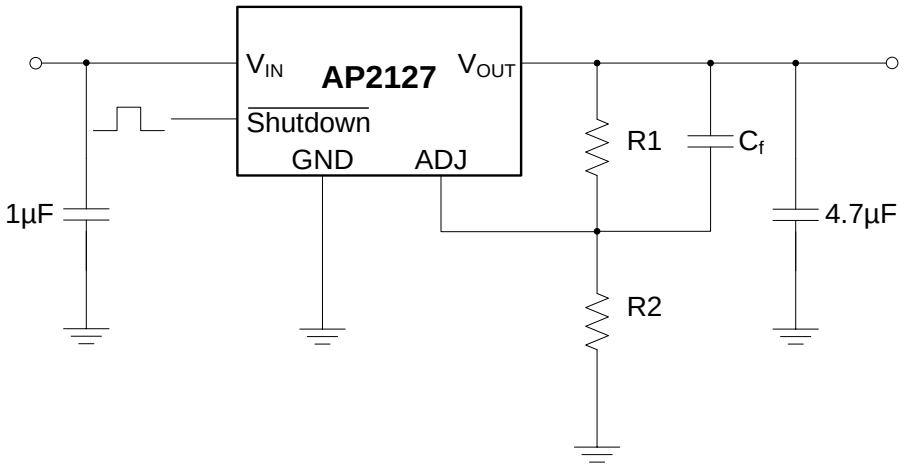

Figure 1. Application Circuit with Feed-forward Capacitor

Current Limit Protection

When output current at VOUT pin is higher than current limit threshold, the current limit protection will be triggered and clamp the output current to prevent over-current and to protect the regulator and load from damaged due to overheating.

Short Circuit Protection

When VOUT pin is shorted to GND, short circuit protection will be triggered and clamp the output current to approximately 50mA.

Auto discharge with Shutdown Version

For shutdown version, an auto discharge MOSFET with $R_{DS(ON)}$ of 60Ω typical is integrated between VOUT and GND pins, which can discharge the charge of the output capacitors quickly when turning off AP2127 with $\overline{\text{Shutdown}}$ pin.

Thermal Consideration

Internal thermal protection circuitry of AP2127 is used to protect device during overload conditions. For continuous operation, ensure not to exceed the operating junction temperature range of +125°C.

The power dissipation definition in the device is:

$P_D = (V_{IN} - V_{OUT}) \times I_{OUT} + V_{IN} \times I_Q$

The maximum power dissipation depends on the thermal resistance of IC package, PCB layout and the surrounding airflow. The maximum power dissipation can also be calculated as:

$P_{D(MAX)} = (T_{J(MAX)} - T_A) / \theta_{JA}$

The maximum power dissipation for SOT-23-5 package (least copper size) at T_A = +25°C can be calculated as:

$P_{D(MAX)} = (125°C - 25°C) / (250°C/W) = 0.4W$

© Diodes Incorporated

Ordering Information

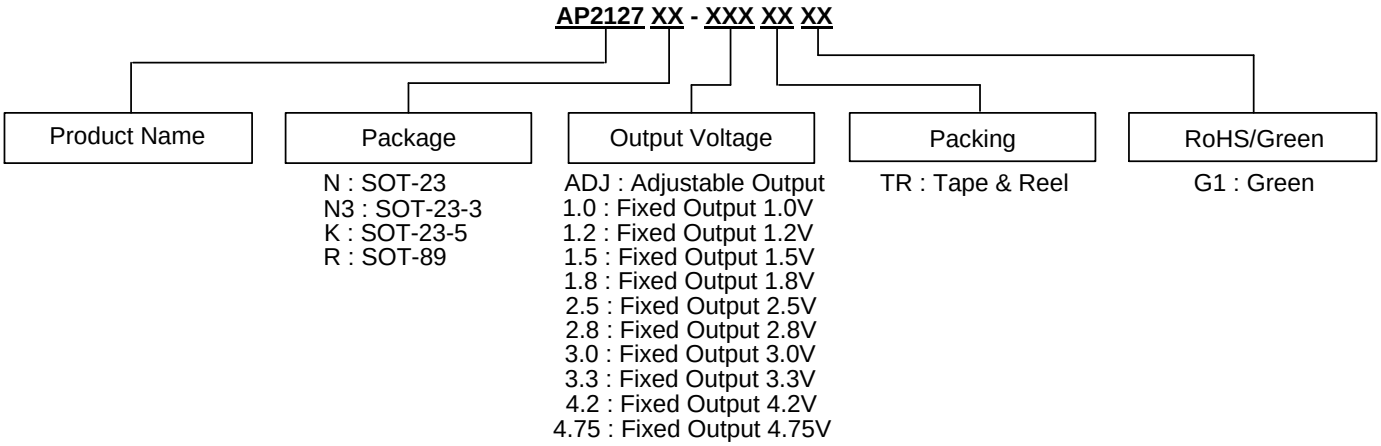

Part Number	Marking ID	Temperature Range	Package	Packaging
AP2127N-1.0TRG1	GU8	-40°C to +85°C	SOT-23	3000/Tape & Reel
AP2127N-1.2TRG1	GS8			3000/Tape & Reel
AP2127N-1.5TRG1	GV8			3000/Tape & Reel
AP2127N-1.8TRG1	GW8			3000/Tape & Reel
AP2127N-2.5TRG1	GT9			3000/Tape & Reel
AP2127N-2.8TRG1	GU9			3000/Tape & Reel
AP2127N-3.0TRG1	GV9			3000/Tape & Reel
AP2127N-3.3TRG1	GW9			3000/Tape & Reel
AP2127N3-1.2TRG1	GU2		SOT-23-3	3000/Tape & Reel
AP2127N3-1.5TRG1	GU3			3000/Tape & Reel
AP2127K-ADJTRG1	GEH		SOT-23-5	3000/Tape & Reel
AP2127K-1.0TRG1	GEG			3000/Tape & Reel
AP2127K-1.2TRG1	GEI			3000/Tape & Reel
AP2127K-1.5TRG1	GEP			3000/Tape & Reel
AP2127K-1.8TRG1	GEQ			3000/Tape & Reel
AP2127K-2.5TRG1	GER			3000/Tape & Reel
AP2127K-2.8TRG1	GES			3000/Tape & Reel
AP2127K-3.0TRG1	GHF			3000/Tape & Reel
AP2127K-3.3TRG1	GET			3000/Tape & Reel
AP2127K-4.2TRG1	GEU			3000/Tape & Reel
AP2127K-4.75TRG1	GEZ			3000/Tape & Reel
AP2127R-3.3TRG1	G42P		SOT-89	1000/Tape & Reel

© Diodes Incorporated

Marking Information

(1) SOT-23, SOT-23-3

(Top View)

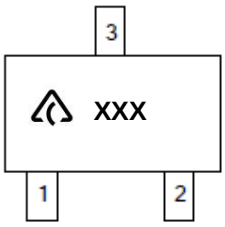

: Logo
XXX : Marking ID (See Ordering Information)

(2) SOT-23-5

(Top View)

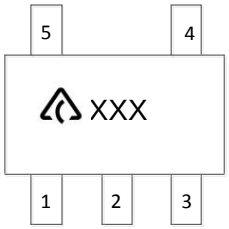

: Logo
XXX : Marking ID (See Ordering Information)

(Top View)

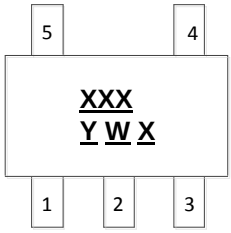

XXX : Marking ID (See Ordering Information)
Y : Year 0 to 9
W : Week : A to Z : 1 to 26 week;
a to z : 27 to 52 week; z represents
52 and 53 week
X : Internal Code

(3) SOT-89

(Top View)

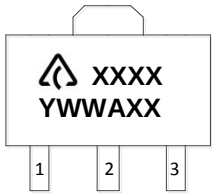

First Line: Logo and Marking ID (See Ordering Information)
Second Line: Date Code
Y: Year
WW: Work Week of Molding
A: Assembly House Code
XX: 7th and 8th Digits of Batch Number

© Diodes Incorporated

Package Outline Dimensions (All dimensions in mm.)

(1) Package Type: SOT-23

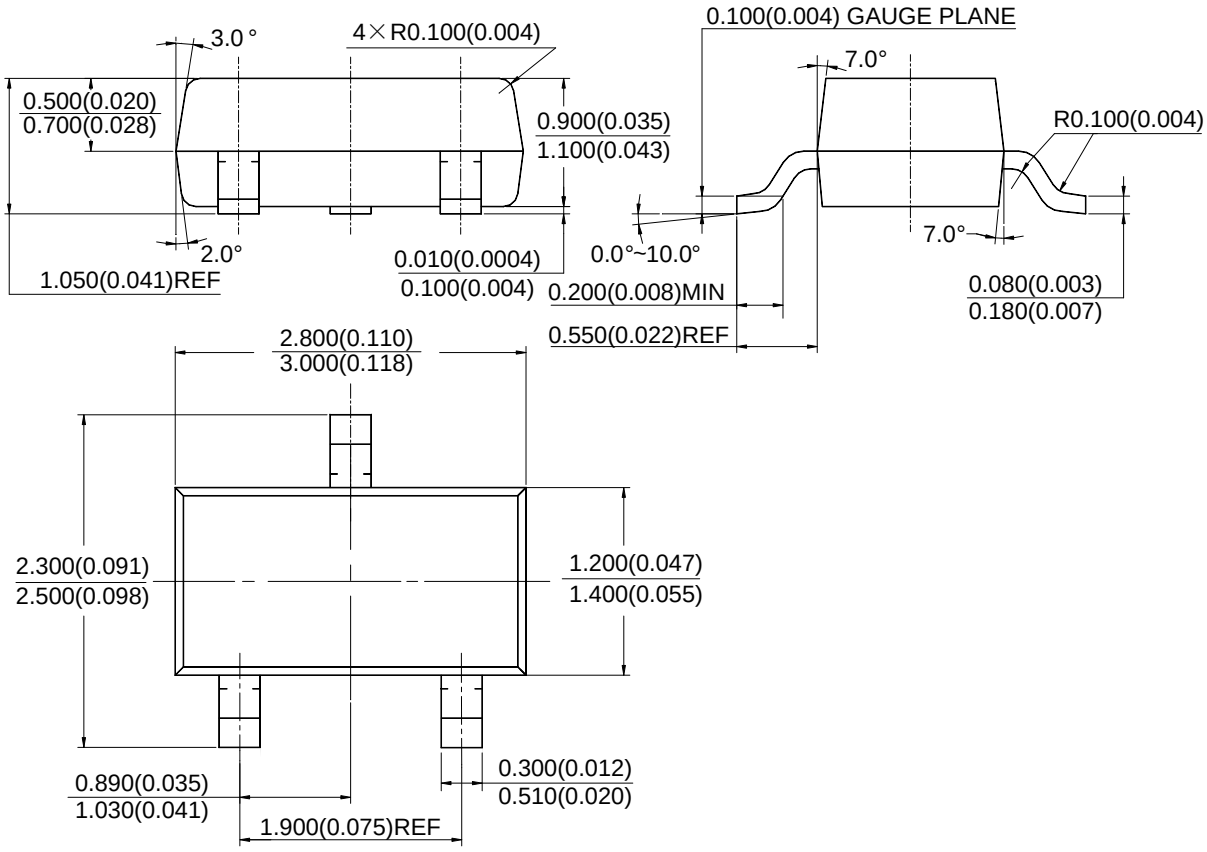

© Diodes Incorporated

Package Outline Dimensions (Cont.) (All dimensions in mm.)

(2) Package Type: SOT-23-3

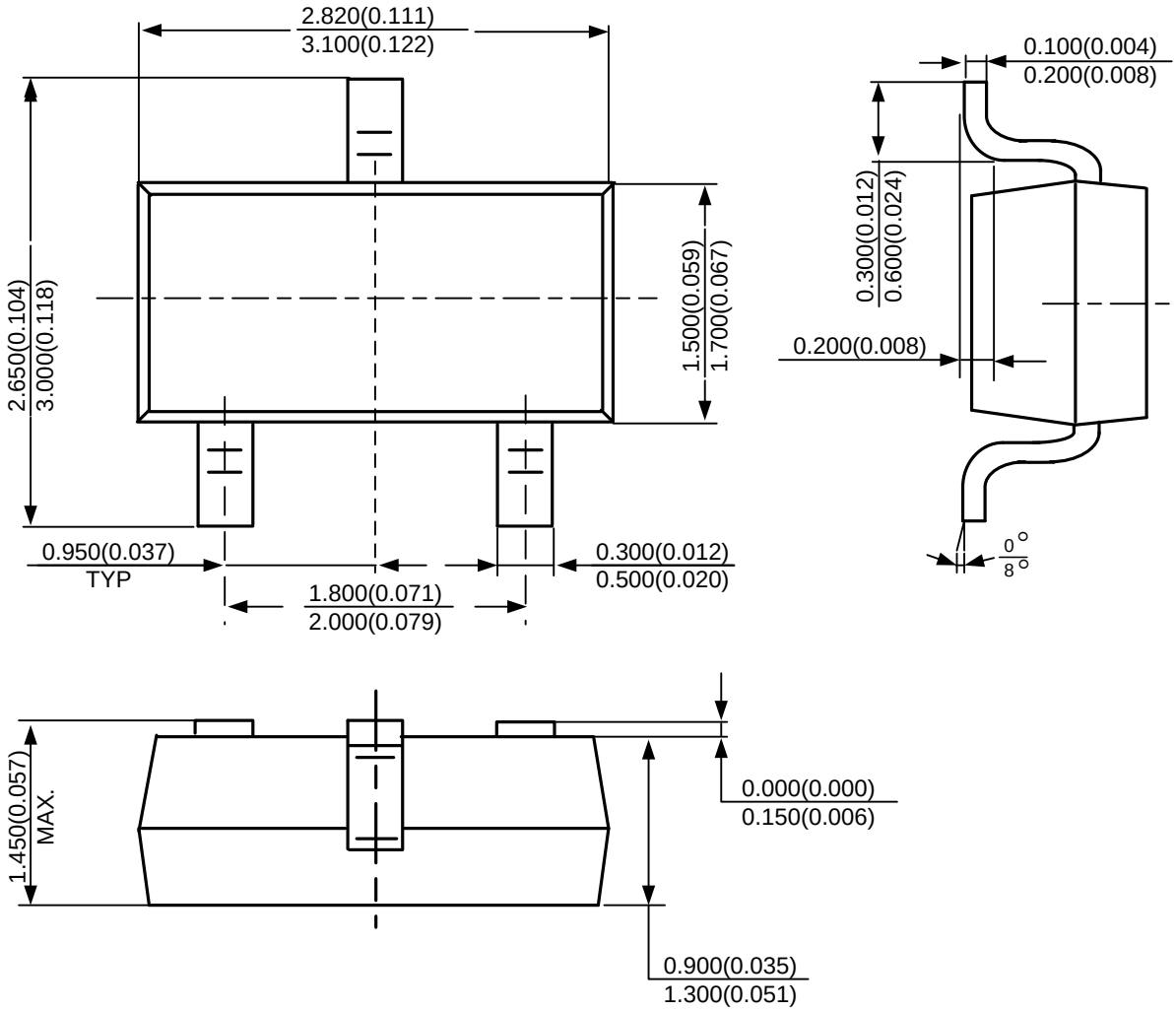

© Diodes Incorporated

Package Outline Dimensions (Cont.) (All dimensions in mm.)

(3) Package Type: SOT-23-5

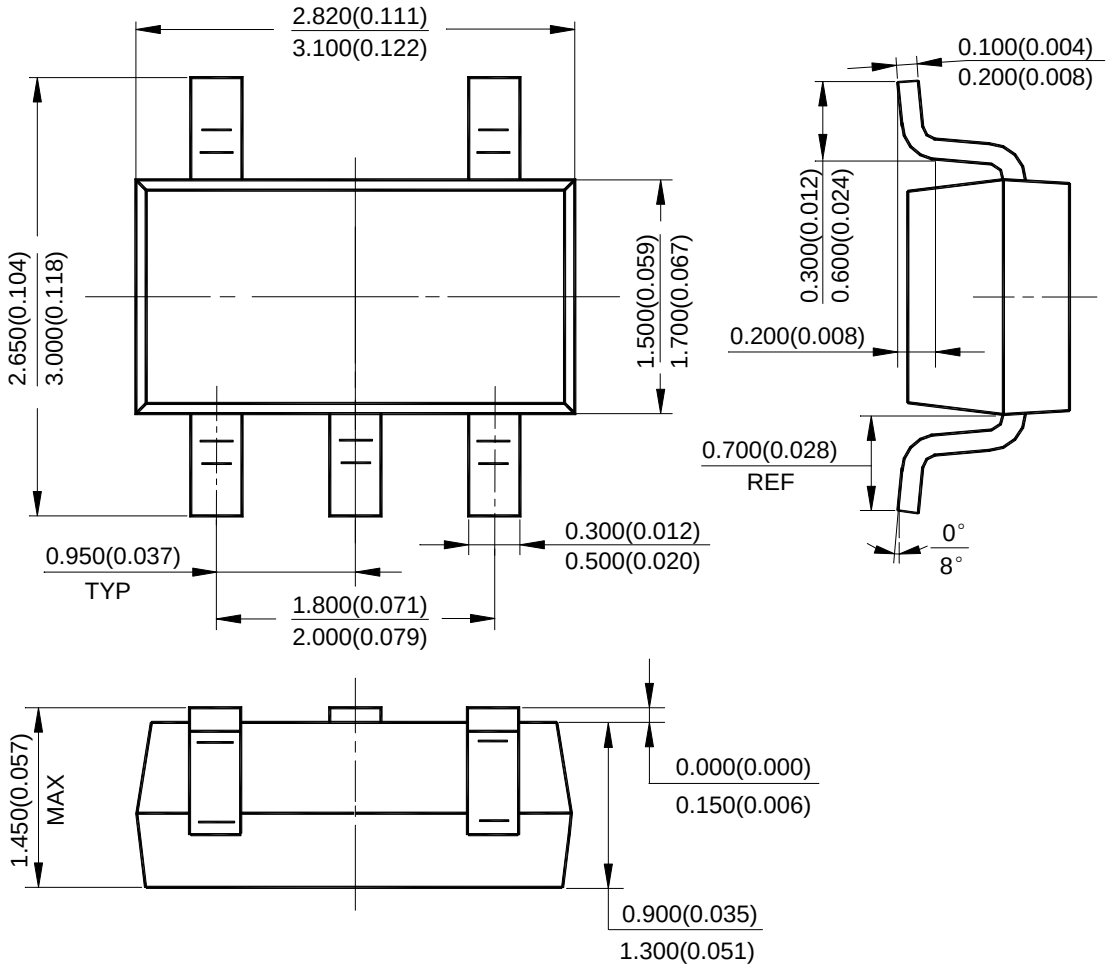

© Diodes Incorporated

Package Outline Dimensions (Cont.) (All dimensions in mm.)

(4) Package Type: SOT-89

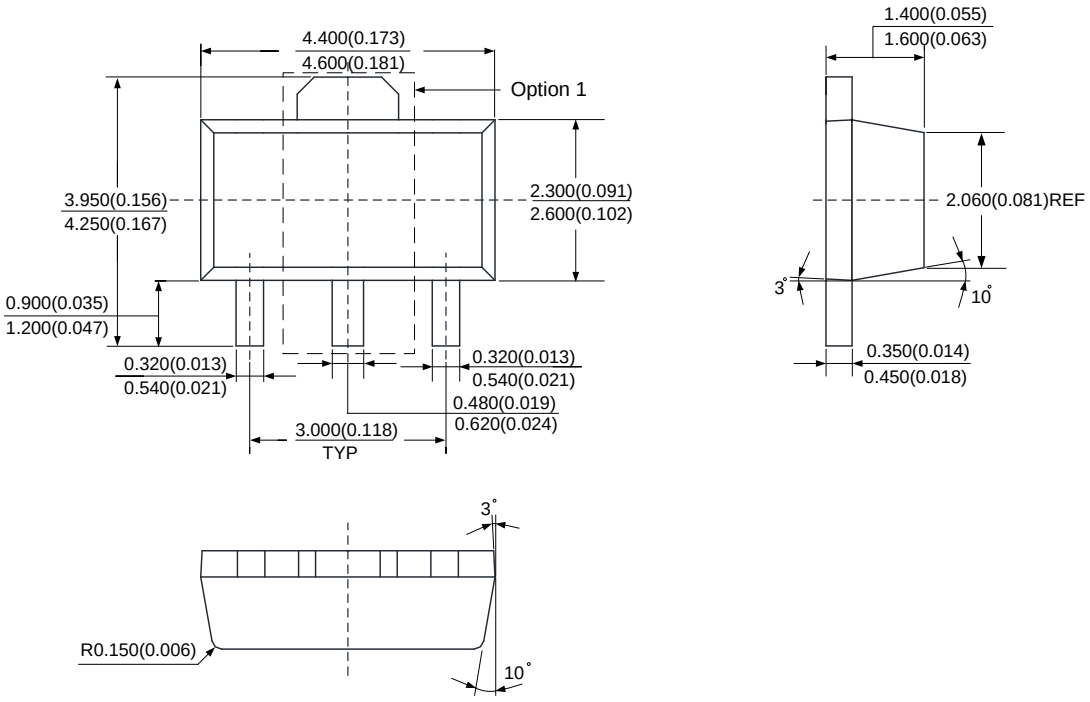

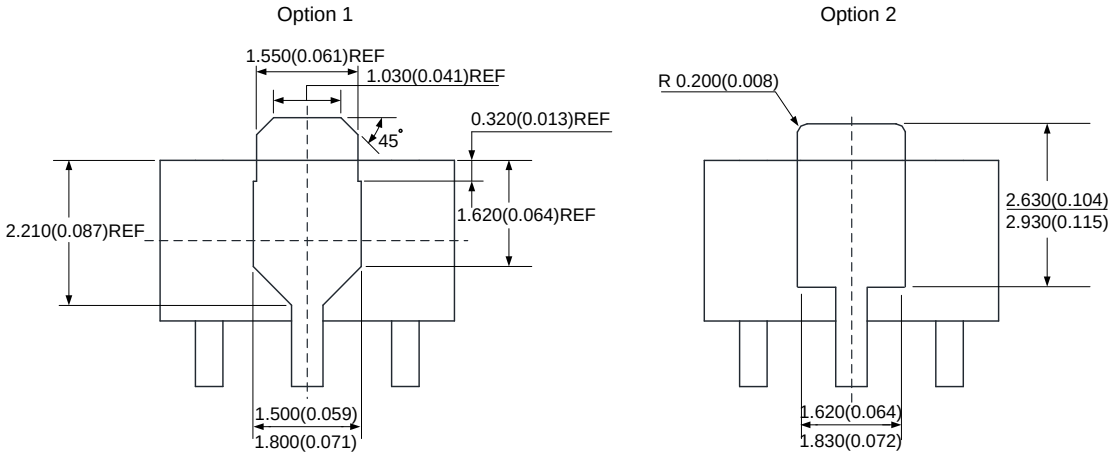

© Diodes Incorporated

Suggested Pad Layout

(1) Package Type: SOT-23

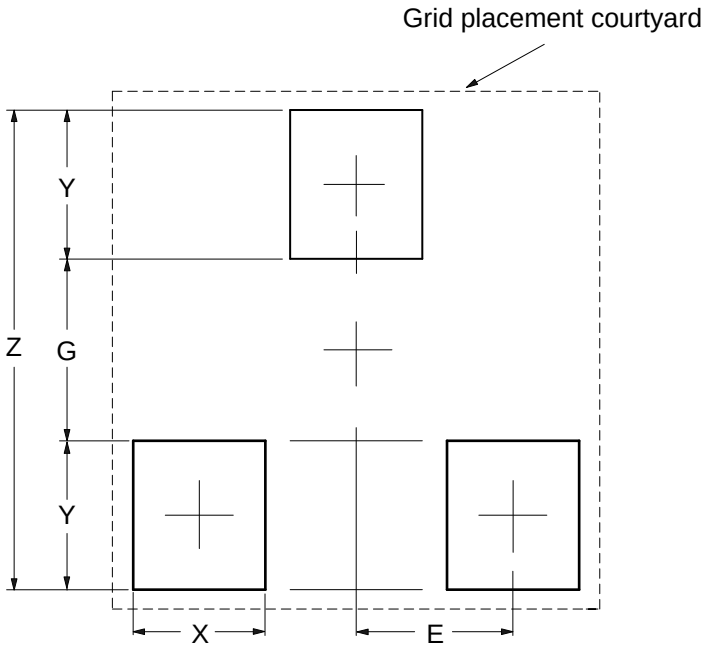

Dimensions	Z (mm)/(inch)	G (mm)/(inch)	X (mm)/(inch)	Y (mm)/(inch)	E (mm)/(inch)
Value	2.900/0.114	1.100/0.043	0.800/0.031	0.900/0.035	0.950/0.037

© Diodes Incorporated

Suggested Pad Layout (Cont.)

(2) Package Type: SOT-23-3

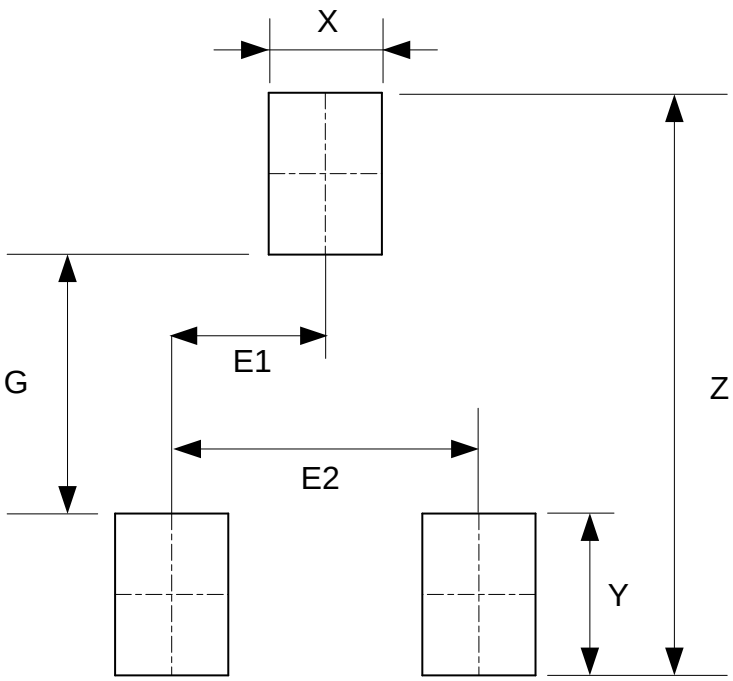

Dimensions	Z (mm)/(inch)	G (mm)/(inch)	X (mm)/(inch)	Y (mm)/(inch)	E1 (mm)/(inch)	E2 (mm)/(inch)
Value	3.600/0.142	1.600/0.063	0.700/0.028	1.000/0.039	0.950/0.037	1.900/0.075

© Diodes Incorporated

Suggested Pad Layout (Cont.)

(3) Package Type: SOT-23-5

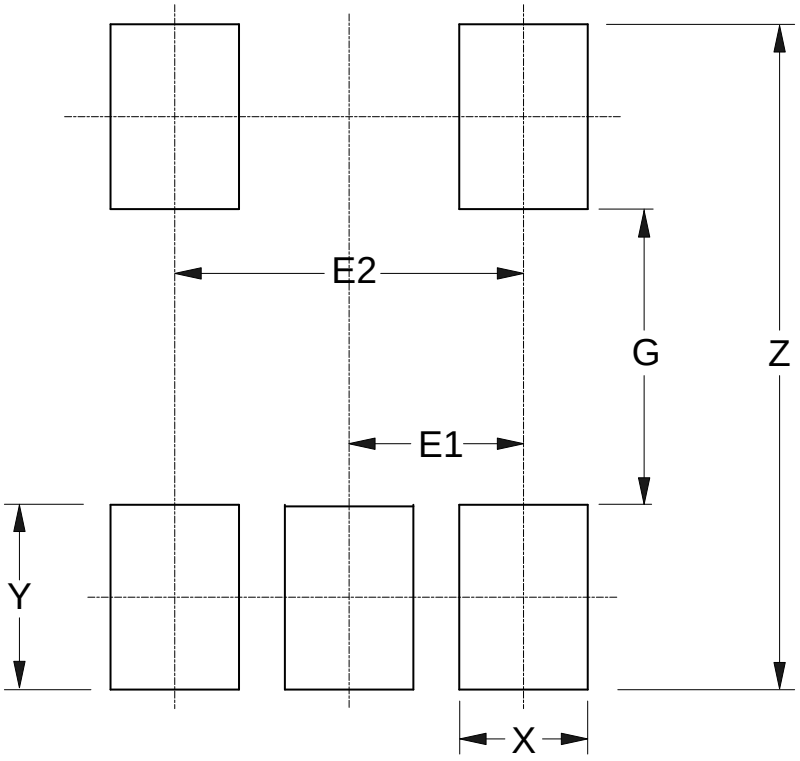

Dimensions	Z (mm)/(inch)	G (mm)/(inch)	X (mm)/(inch)	Y (mm)/(inch)	E1 (mm)/(inch)	E2 (mm)/(inch)
Value	3.600/0.142	1.600/0.063	0.700/0.028	1.000/0.039	0.950/0.037	1.900/0.075

© Diodes Incorporated

Suggested Pad Layout (Cont.)

(4) Package Type: SOT-89

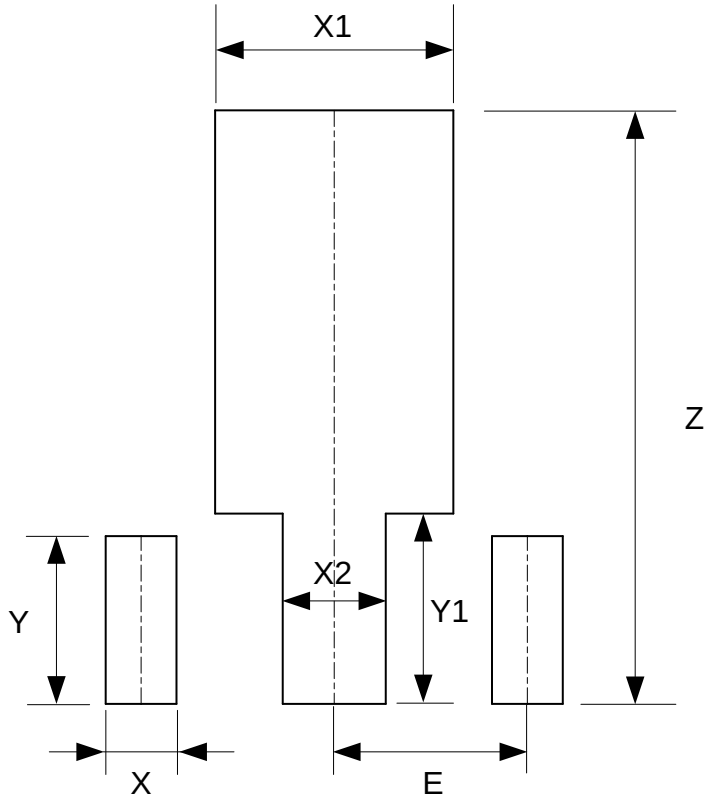

Dimensions	Z (mm)/(inch)	X (mm)/(inch)	X1 (mm)/(inch)	X2 (mm)/(inch)	Y (mm)/(inch)	Y1 (mm)/(inch)	E (mm)/(inch)
Value	4.600/0.181	0.550/0.022	1.850/0.073	0.800/0.031	1.300/0.051	1.475/0.058	1.500/0.059

© Diodes Incorporated

IMPORTANT NOTICE

DIODES INCORPORATED MAKES NO WARRANTY OF ANY KIND, EXPRESS OR IMPLIED, WITH REGARDS TO THIS DOCUMENT, INCLUDING, BUT NOT LIMITED TO, THE IMPLIED WARRANTIES OF MERCHANTABILITY AND FITNESS FOR A PARTICULAR PURPOSE (AND THEIR EQUIVALENTS UNDER THE LAWS OF ANY JURISDICTION).

Diodes Incorporated and its subsidiaries reserve the right to make modifications, enhancements, improvements, corrections or other changes without further notice to this document and any product described herein. Diodes Incorporated does not assume any liability arising out of the application or use of this document or any product described herein; neither does Diodes Incorporated convey any license under its patent or trademark rights, nor the rights of others. Any Customer or user of this document or products described herein in such applications shall assume all risks of such use and will agree to hold Diodes Incorporated and all the companies whose products are represented on Diodes Incorporated website, harmless against all damages.

Diodes Incorporated does not warrant or accept any liability whatsoever in respect of any products purchased through unauthorized sales channel. Should Customers purchase or use Diodes Incorporated products for any unintended or unauthorized application, Customers shall indemnify and hold Diodes Incorporated and its representatives harmless against all claims, damages, expenses, and attorney fees arising out of, directly or indirectly, any claim of personal injury or death associated with such unintended or unauthorized application.

Products described herein may be covered by one or more United States, international or foreign patents pending. Product names and markings noted herein may also be covered by one or more United States, international or foreign trademarks.

This document is written in English but may be translated into multiple languages for reference. Only the English version of this document is the final and determinative format released by Diodes Incorporated.

LIFE SUPPORT

Diodes Incorporated products are specifically not authorized for use as critical components in life support devices or systems without the express written approval of the Chief Executive Officer of Diodes Incorporated. As used herein:

A. Life support devices or systems are devices or systems which:

1. are intended to implant into the body, or

2. support or sustain life and whose failure to perform when properly used in accordance with instructions for use provided in the labeling can be reasonably expected to result in significant injury to the user.

B. A critical component is any component in a life support device or system whose failure to perform can be reasonably expected to cause the failure of the life support device or to affect its safety or effectiveness.

Customers represent that they have all necessary expertise in the safety and regulatory ramifications of their life support devices or systems, and acknowledge and agree that they are solely responsible for all legal, regulatory and safety-related requirements concerning their products and any use of Diodes Incorporated products in such safety-critical, life support devices or systems, notwithstanding any devices- or systems-related information or support that may be provided by Diodes Incorporated. Further, Customers must fully indemnify Diodes Incorporated and its representatives against any damages arising out of the use of Diodes Incorporated products in such safety-critical, life support devices or systems.

Copyright © 2017, Diodes Incorporated

www.diodes.com

ENTEGRECİ

Bu belge www.entegreci.com üzerinden sunulmaktadır.

Elektronik komponent tedarikinde Entegreci

Entegreci, Eskişehir merkezli, Türkiye geneline satış yapan bir elektronik komponent mağazasıdır. Entegreler (IC), mikrodenetleyiciler, transistörler, diyotlar, pasif elemanlar, konnektörler, modüller ve geliştirme kartları tek adetten seri üretim adetlerine kadar satılır. Ürün sayfalarında güncel stok durumunu, fiyatı ve datasheet bağlantısını bulabilirsiniz.

Parça koduyla arama

Üretici parça numarasını yazın; stok ve fiyatı hemen görün.

www.entegreci.com

Ürün kategorileri

Entegreden kapasitöre tüm elektronik komponent kategorileri.

Kategorilere göz atın

Üreticiler

Aradığınız üreticinin ürünlerini tek sayfada inceleyin.

Üreticileri görün

Toplu alım ve teklif

Listede olmayan ya da yüksek adetli parçalar için teklif isteyin.

Teklif isteyin

www.entegreci.com | **destek@entegreci.com** | **0850 305 90 34**

Entegreci is an online electronic components store based in Türkiye. Search by manufacturer part number to see stock, prices and datasheets for integrated circuits, microcontrollers, transistors, passive components and connectors, or request a quote for parts that are not listed.

Bu sayfa Entegreci tarafından eklenmiştir. Belgenin önceki sayfaları asıl yayıncısına aittir ve içeriği değiştirilmemiştir; en güncel sürüm için belgenin yayıncısına başvurun.