ULTRA-LOW QUIESCENT CURRENT CMOS LDO

Lead-free Green

Description

The AP2138/2139 series are CMOS-based positive voltage regulator ICs. Each of these ICs consists of a voltage reference, an error amplifier, a resistor network for setting output voltage and a current limit circuit for current protection.

The difference between AP2138 and AP2139 is the AP2139 has an enable circuit with a quick discharge function.

These ICs feature high output voltage accuracy, extremely low quiescent current and low dropout voltage which make them ideal for use in various power sources for portable applications.

The AP2138/2139 series have 1.2V, 1.4V, 1.5V, 1.8V, 2.1V, 2.2V, 2.5V, 2.8V, 3.0V, 3.3V, 3.6V and 4.0V fixed output voltage versions.

The AP2138 series is available in SOT-23-3 and SOT-89 packages, the AP2139 series is available in SOT-23-5 package.

Features

- Ultra-Low Quiescent Current: 1.0µA typical
- Output Voltages: 1.2V, 1.4V, 1.5V, 1.8V, 2.1V, 2.2V, 2.5V, 2.8V, 3.0V, 3.3V, 3.6V and 4.0V
- High Output Voltage Accuracy: ±2%
- Output Current: 250mA
- Low Dropout Voltage:
  - 25mV typical at I_{OUT} = 10mA and V_{OUT} = 3V
  - 200mV typical at I_{OUT} = 100mA and V_{OUT} = 3V
- Line Regulation: 6mV typical
- Load Regulation: 25mV typical
- Low Output Voltage Temperature Coefficient: ±100ppm/°C
- Low Standby Current: 0.1µA typical (AP2139)
- Active Quick Output Discharge (AP2139)
- Logic-Controlled Enable (AP2139)
- **Totally Lead-Free & Fully RoHS Compliant (Notes 1 & 2)**
- **Halogen and Antimony Free. "Green" Device (Note 3)**
- **For automotive applications requiring specific change control (i.e. parts qualified to AEC-Q100/101/104/200, PPAP capable, and manufactured in IATF 16949 certified facilities), please contact us or your local Diodes representative. https://www.diodes.com/quality/product-definitions/**

Applications

- Battery powered equipment
- Reference voltage sources
- Cameras, video cameras
- Portable AV systems
- Mobile phones
- Communication tools
- Portable games

Notes:
1. No purposely added lead. Fully EU Directive 2002/95/EC (RoHS), 2011/65/EU (RoHS 2) & 2015/863/EU (RoHS 3) compliant.
2. See https://www.diodes.com/quality/lead-free/ for more information about Diodes Incorporated's definitions of Halogen- and Antimony-free, "Green" and Lead-free.
3. Halogen- and Antimony-free "Green" products are defined as those which contain <900ppm bromine, <900ppm chlorine (<1500ppm total Br + Cl) and <1000ppm antimony compounds.

NOT RECOMMENDED FOR NEW DESIGN

Pin Assignments

(Top View)

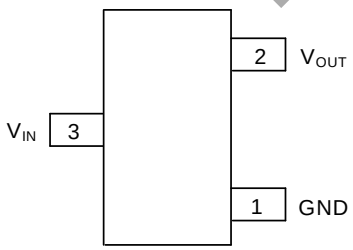

SOT-23-3

(Top View)

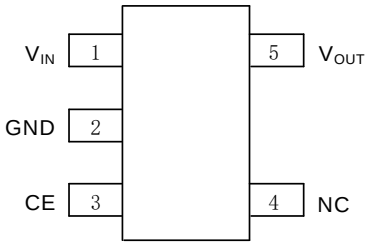

SOT-23-5

(Top View)

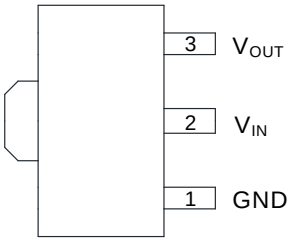

SOT-89 (Option 1)/R Package

© 2024 Copyright Diodes Incorporated. All Rights Reserved.

Pin Assignments (continued)

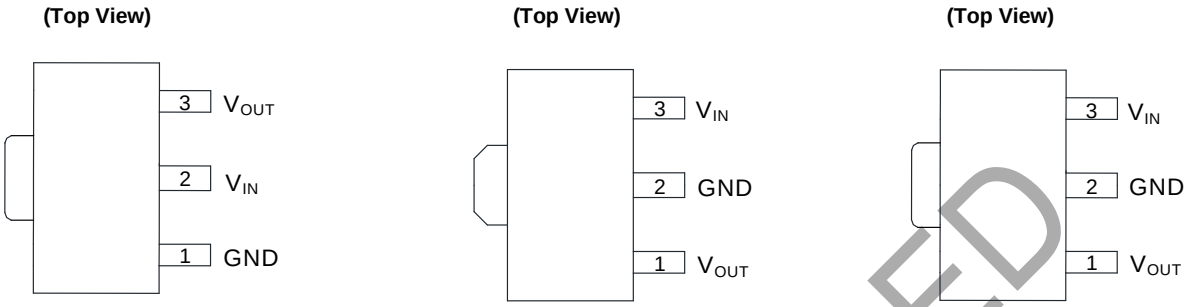

SOT-89 (Option 2)/ R Package | **SOT-89 (Option 1)/ RA Package** | **SOT-89 (Option 2)/ RA Package**

Typical Applications Circuit (Note 4)

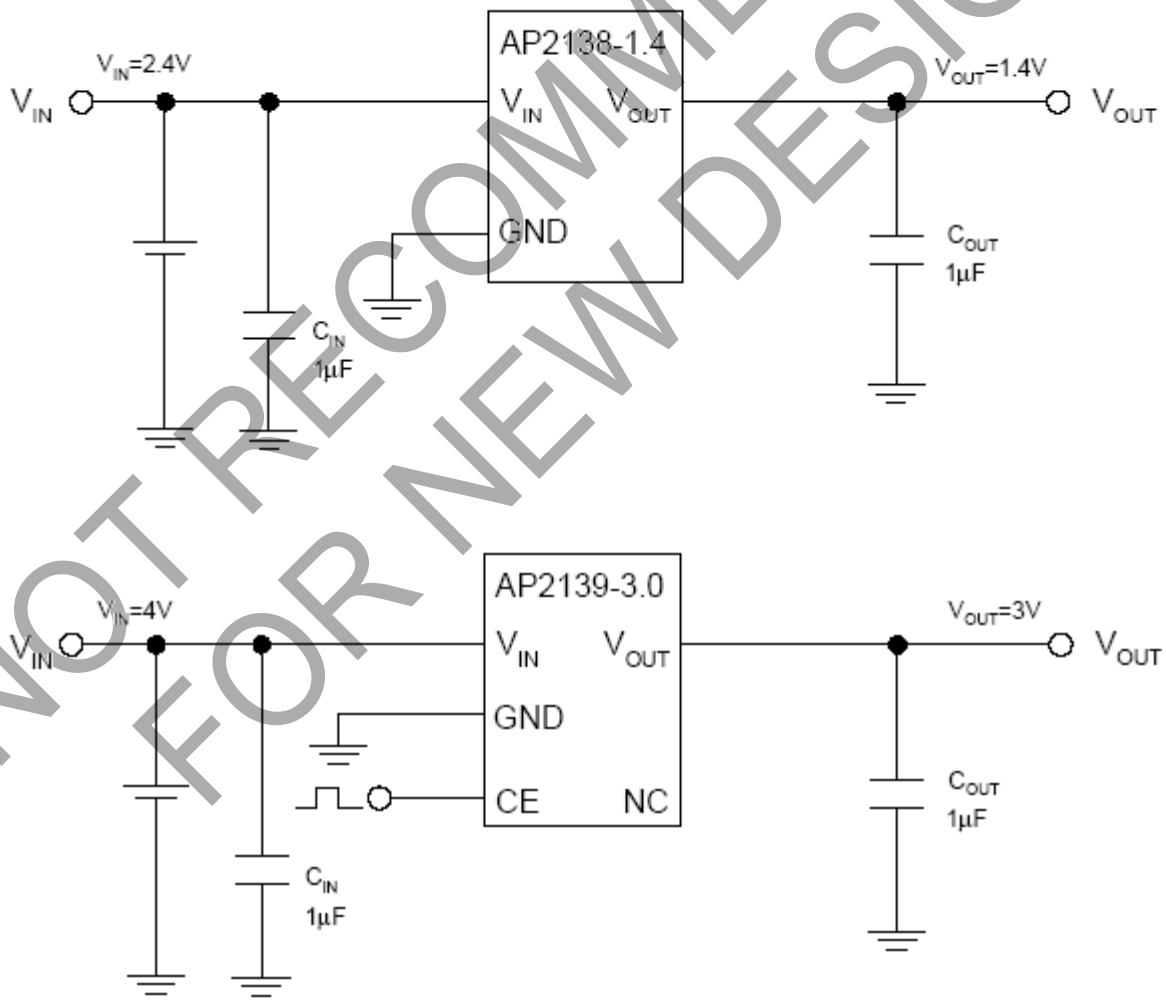

NOT RECOMMENDED FOR NEW DESIGN

Note 4: Filter capacitors are required at the AP2138/2139's input and output. 1µF capacitor is required at the input. The minimum output capacitance required for stability should be more than 1µF with ESR from 0.01Ω to 100Ω. Ceramic capacitors are recommended.

© 2024 Copyright Diodes Incorporated. All Rights Reserved.

Pin Description

Pin Number				Pin Name	Function
SOT-23-3	SOT-89 (R Package)	SOT-89 (RA Package)	SOT-23-5		
1	1	2	2	GND	Ground
2	3	1	5	V_{OUT}	Regulated output voltage
3	2	3	1	V_{IN}	Input voltage
—	—	—	3	CE	Active high enable input. Logic high = enable, logic low = shutdown
—	—	—	4	NC	No connection

Functional Block Diagram

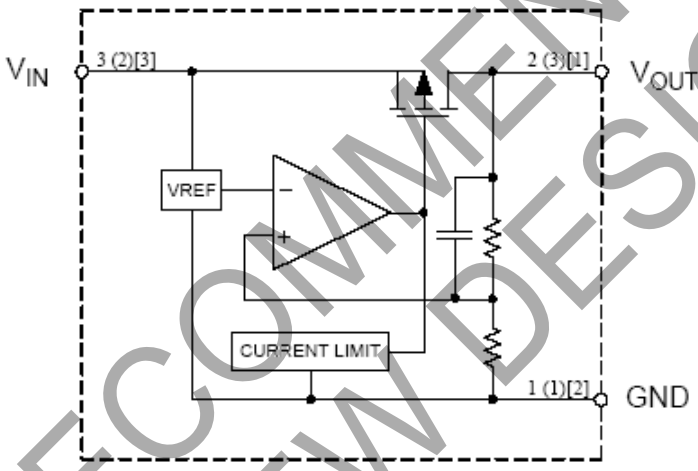

A(B)[C]
A: SOT-23-3
B: SOT-89 (R)
C: SOT-89 (RA)

AP2138

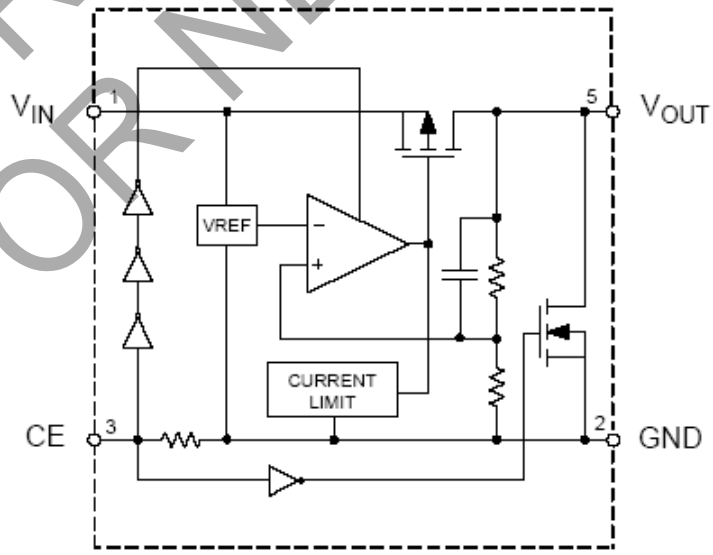

AP2139

NOT RECOMMENDED FOR NEW DESIGN

© 2024 Copyright Diodes Incorporated. All Rights Reserved.

Absolute Maximum Ratings (Note 5)

Symbol	Parameter	Rating		Unit
V_{IN}	Input Voltage	6.6		V
V_{CE}	Enable Input Voltage (AP2139)	-0.3 to V_{IN}+0.3		V
T_{LEAD}	Lead Temperature	+260		°C
T_J	Junction Temperature	+150		°C
T_{STG}	Storage Temperature Range	-65 to +150		°C
ESD	ESD (Machine Model)	350		V
ESD	ESD (Human Body Model)	2000		V
θ_{JA}	Thermal Resistance (Note 6)	SOT-23-3	250	°C/W
		SOT-23-5	250	
		SOT-89	165	

Notes:
5. Stresses greater than those listed under "*Absolute Maximum Ratings*" can cause permanent damage to the device. These are stress ratings only, and functional operation of the device at these or any other conditions beyond those indicated under "*Recommended Operating Conditions*" is not implied. Exposure to "*Absolute Maximum Ratings*" for extended periods can affect device reliability.
6. Absolute maximum ratings indicate limits beyond which damage to the component can occur. Electrical specifications do not apply when operating the device outside of its operating ratings. The maximum allowable power dissipation is a function of the maximum junction temperature, $T_{J(MAX)}$, the junction-to-ambient thermal resistance, θ_{JA}, and the ambient temperature, T_A. The maximum allowable power dissipation at any ambient temperature is calculated using: $P_{D(MAX)} = (T_{J(MAX)} - T_A)/\theta_{JA}$. Exceeding the maximum allowable power dissipation will result in excessive die temperature.

Recommended Operating Conditions

Symbol	Parameter	Min	Max	Unit
V_{IN}	Input Voltage	2.5	6.0	V
T_A	Operating Ambient Temperature Range	-40	+85	°C

NOT RECOMMENDED FOR NEW DESIGN

© 2024 Copyright Diodes Incorporated. All Rights Reserved.

Electrical Characteristics AP2138/2139-1.2 (@V_{IN} = 2.5V, V_{CE} = 2.5V (AP2139), T_J = +25°C, I_{OUT} = 40mA, C_{IN} = C_{OUT} = 1µF, **Bold** typeface applies -40°C ≤ T_J ≤ +85°C, unless otherwise specified.)

Symbol	Parameter	Conditions	Min	Typ	Max	Unit
V_{IN}	Input Voltage	—	—	—	6.0	V
V_{OUT}	Output Voltage	—	1.176	1.200	1.224	V
I_Q	Quiescent Current	I_{OUT} = 0	—	1.0	1.5	µA
I_{STD}	Standby Current (AP2139)	V_{CE} = 0	—	0.1	1	µA
I_{OUT}	Output Current	—	250	—	—	mA
V_{RLOAD}	Load Regulation	1mA ≤ I_{OUT} ≤ 100mA	—	25	40	mV
V_{RLINE}	Line Regulation	2.2V ≤ V_{IN} ≤ 6V	—	6	18	mV
V_{DROP}	Dropout Voltage	I_{OUT} = 10mA	—	100	300	mV
		I_{OUT} = 30mA	—	400	700	
		I_{OUT} = 100mA	—	700	1000	
		I_{OUT} = 250mA	—	1000	1300	
$\Delta V_{OUT}/\Delta T$	Output Voltage Temperature Coefficient	—	—	±140	—	µV/°C
$(\Delta V_{OUT}/V_{OUT})/\Delta T$		—	—	±100	—	ppm/°C
I_{SHORT}	Short Circuit Current	V_{OUT} = 0	—	50	—	mA
I_{PD}	CE Pull-Down Constant Current (AP2139)	—	—	0.2	—	µA
V_{IH}	CE Input Logic-High Voltage (AP2139)	—	1.2	—	—	V
V_{IL}	CE Input Logic-Low Voltage (AP2139)	—	—	—	0.3	V
θ_{JC}	Thermal Resistance	SOT-23-3	—	81.9	—	°C/W
		SOT-23-5	—	81.9	—	
		SOT-89	—	51.1	—	

NOT RECOMMENDED FOR NEW DESIGN

© 2024 Copyright Diodes Incorporated. All Rights Reserved.

Electrical Characteristics AP2138/2139-1.4 (@V_{IN} = 2.5V, V_{CE} = 2.5V (AP2139), T_J = +25°C, I_{OUT} = 40mA, C_{IN} = C_{OUT} = 1µF, **Bold** typeface applies -40°C ≤ T_J ≤ +85°C, unless otherwise specified.) (continued)

Symbol	Parameter	Conditions	Min	Typ	Max	Unit
V_{IN}	Input Voltage	—	—	—	6.0	V
V_{OUT}	Output Voltage	—	1.372	1.400	1.428	V
I_Q	Quiescent Current	I_{OUT} = 0	—	1.0	1.5	µA
I_{STD}	Standby Current (AP2139)	V_{CE} = 0	—	0.1	1	µA
I_{OUT}	Output Current	—	250	—	—	mA
V_{RLOAD}	Load Regulation	1mA ≤ I_{OUT} ≤ 100mA	—	25	40	mV
V_{RLINE}	Line Regulation	2.4V ≤ V_{IN} ≤ 6V	—	6	18	mV
V_{DROP}	Dropout Voltage	I_{OUT} = 10mA	—	100	300	mV
		I_{OUT} = 30mA	—	400	700	
		I_{OUT} = 100mA	—	600	900	
		I_{OUT} = 250mA	—	1000	1300	
$\Delta V_{OUT}/\Delta T$	Output Voltage Temperature Coefficient	—	—	±140	—	µV/°C
$(\Delta V_{OUT}/V_{OUT})/\Delta T$		—	—	±100	—	ppm/°C
I_{SHORT}	Short Circuit Current	V_{OUT} = 0	—	50	—	mA
I_{PD}	CE Pull-Down Constant Current (AP2139)	—	—	0.2	—	µA
V_{IH}	CE Input Logic-High Voltage (AP2139)	—	1.2	—	—	V
V_{IL}	CE Input Logic-Low Voltage (AP2139)	—	—	—	0.3	V
θ_{JC}	Thermal Resistance	SOT-23-3	—	81.9	—	°C/W
		SOT-23-5	—	81.9	—	
		SOT-89	—	51.1	—	

NOT RECOMMENDED FOR NEW DESIGN

© 2024 Copyright Diodes Incorporated. All Rights Reserved.

Electrical Characteristics AP2138/2139-1.5 (@V_{IN} = 2.5V, V_{CE} = 2.5V (AP2139), T_J = +25°C, I_{OUT} = 40mA, C_{IN} = C_{OUT} = 1µF, **Bold** typeface applies -40°C ≤ T_J ≤ +85°C, unless otherwise specified.) (continued)

Symbol	Parameter	Conditions	Min	Typ	Max	Unit
V_{IN}	Input Voltage	—	—	—	6.0	V
V_{OUT}	Output Voltage	—	1.470	1.500	1.530	V
I_Q	Quiescent Current	I_{OUT} = 0	—	1.0	1.5	µA
I_{STD}	Standby Current (AP2139)	V_{CE} = 0	—	0.1	1	µA
I_{OUT}	Output Current	—	250	—	—	mA
V_{RLOAD}	Load Regulation	1mA ≤ I_{OUT} ≤ 100mA	—	25	40	mV
V_{RLINE}	Line Regulation	2.5V ≤ V_{IN} ≤ 6V	—	6	18	mV
V_{DROP}	Dropout Voltage	I_{OUT} = 10mA	—	100	300	mV
		I_{OUT} = 30mA	—	200	400	
		I_{OUT} = 100mA	—	600	900	
		I_{OUT} = 250mA	—	1000	1300	
$\Delta V_{OUT}/\Delta T$	Output Voltage Temperature Coefficient	—	—	±150	—	µV/°C
$(\Delta V_{OUT}/V_{OUT})/\Delta T$		—	—	±100	—	ppm/°C
I_{SHORT}	Short Circuit Current	V_{OUT} = 0	—	50	—	mA
I_{PD}	CE Pull-Down Constant Current (AP2139)	—	—	0.2	—	µA
V_{IH}	CE Input Logic-High Voltage (AP2139)	—	1.2	—	—	V
V_{IL}	CE Input Logic-Low Voltage (AP2139)	—	—	—	0.3	V
θ_{JC}	Thermal Resistance	SOT-23-3	—	81.9	—	°C/W
		SOT-23-5	—	81.9	—	
		SOT-89	—	51.1	—	

NOT RECOMMENDED FOR NEW DESIGN

© 2024 Copyright Diodes Incorporated. All Rights Reserved.

Electrical Characteristics AP2138/2139-1.8 (@V_{IN} = 2.8V, V_{CE} = 2.8V (AP2139), T_J = +25°C, I_{OUT} = 40mA, C_{IN} = C_{OUT} = 1µF, **Bold** typeface applies -40°C ≤ T_J ≤ +85°C, unless otherwise specified.) (continued)

Symbol	Parameter	Conditions	Min	Typ	Max	Unit
V_{IN}	Input Voltage	—	—	—	6.0	V
V_{OUT}	Output Voltage	—	1.764	1.800	1.836	V
I_Q	Quiescent Current	I_{OUT} = 0	—	1.0	1.5	µA
I_{STD}	Standby Current (AP2139)	V_{CE} = 0	—	0.1	1	µA
I_{OUT}	Output Current	—	250	—	—	mA
V_{RLOAD}	Load Regulation	1mA ≤ I_{OUT} ≤ 100mA	—	25	40	mV
V_{RLINE}	Line Regulation	2.8V ≤ V_{IN} ≤ 6V	—	6	18	mV
V_{DROP}	Dropout Voltage	I_{OUT} = 10mA	—	25	100	mV
		I_{OUT} = 30mA	—	120	250	
		I_{OUT} = 100mA	—	400	700	
		I_{OUT} = 250mA	—	850	1100	
$\Delta V_{OUT}/\Delta T$	Output Voltage Temperature Coefficient	—	—	±180	—	µV/°C
$(\Delta V_{OUT}/V_{OUT})/\Delta T$		—	—	±100	—	ppm/°C
I_{SHORT}	Short Circuit Current	V_{OUT} = 0	—	50	—	mA
I_{PD}	CE Pull-Down Constant Current (AP2139)	—	—	0.2	—	µA
V_{IH}	CE Input Logic-High Voltage (AP2139)	—	1.2	—	—	V
V_{IL}	CE Input Logic-Low Voltage (AP2139)	—	—	—	0.3	V
θ_{JC}	Thermal Resistance	SOT-23-3	—	81.9	—	°C/W
		SOT-23-5	—	81.9	—	
		SOT-89	—	51.1	—	

NOT RECOMMENDED FOR NEW DESIGN

© 2024 Copyright Diodes Incorporated. All Rights Reserved.

Electrical Characteristics AP2138/2139-2.1 (@V_{IN} = 3.1V, V_{CE} = 3.1V (AP2139), T_J = +25°C, I_{OUT} = 40mA, C_{IN} = C_{OUT} = 1µF, **Bold** typeface applies -40°C ≤ T_J ≤ +85°C, unless otherwise specified.) (continued)

Symbol	Parameter	Conditions	Min	Typ	Max	Unit
V_{IN}	Input Voltage	—	—	—	6.0	V
V_{OUT}	Output Voltage	—	2.058	2.100	2.142	V
I_Q	Quiescent Current	I_{OUT} = 0	—	1.0	1.5	µA
I_{STD}	Standby Current (AP2139)	V_{CE} = 0	—	0.1	1	µA
I_{OUT}	Output Current	—	250	—	—	mA
V_{RLOAD}	Load Regulation	1mA ≤ I_{OUT} ≤ 100mA	—	25	40	mV
V_{RLINE}	Line Regulation	3.1V ≤ V_{IN} ≤ 6V	—	6	18	mV
V_{DROP}	Dropout Voltage	I_{OUT} = 10mA	—	25	100	mV
		I_{OUT} = 30mA	—	120	250	
		I_{OUT} = 100mA	—	400	700	
		I_{OUT} = 250mA	—	750	1100	
$\Delta V_{OUT}/\Delta T$	Output Voltage Temperature Coefficient	—	—	±180	—	µV/°C
$(\Delta V_{OUT}/V_{OUT})/\Delta T$		—	—	±100	—	ppm/°C
I_{SHORT}	Short Circuit Current	V_{OUT} = 0	—	50	—	mA
I_{PD}	CE Pull-Down Constant Current (AP2139)	—	—	0.2	—	µA
V_{IH}	CE Input Logic-High Voltage (AP2139)	—	1.2	—	—	V
V_{IL}	CE Input Logic-Low Voltage (AP2139)	—	—	—	0.3	V
θ_{JC}	Thermal Resistance	SOT-23-3	—	81.9	—	°C/W

NOT RECOMMENDED FOR NEW DESIGN

© 2024 Copyright Diodes Incorporated. All Rights Reserved.

Electrical Characteristics AP2138/2139-2.2 (@V_{IN} = 3.2V, V_{CE} = 3.2V (AP2139), T_J = +25°C, I_{OUT} = 40mA, C_{IN} = C_{OUT} = 1µF, **Bold** typeface applies -40°C ≤ T_J ≤ +85°C, unless otherwise specified.) (continued)

Symbol	Parameter	Conditions	Min	Typ	Max	Unit
V_{IN}	Input Voltage	—	—	—	6.0	V
V_{OUT}	Output Voltage	—	2.156	2.2	2.244	V
I_Q	Quiescent Current	I_{OUT} = 0	—	1.0	1.5	µA
I_{STD}	Standby Current (AP2139)	V_{CE} = 0	—	0.1	1	µA
I_{OUT}	Output Current	—	250	—	—	mA
V_{RLOAD}	Load Regulation	1mA ≤ I_{OUT} ≤ 100mA	—	25	40	mV
V_{RLINE}	Line Regulation	3.2V ≤ V_{IN} ≤ 6V	—	6	18	mV
V_{DROP}	Dropout Voltage	I_{OUT} = 10mA	—	25	100	mV
		I_{OUT} = 30mA	—	120	250	
		I_{OUT} = 100mA	—	400	700	
		I_{OUT} = 250mA	—	700	1050	
$\Delta V_{OUT}/\Delta T$	Output Voltage Temperature Coefficient	—	—	±180	—	µV/°C
$(\Delta V_{OUT}/V_{OUT})/\Delta T$		—	—	±100	—	ppm/°C
I_{SHORT}	Short Circuit Current	V_{OUT} = 0	—	50	—	mA
I_{PD}	CE Pull-Down Constant Current (AP2139)	—	—	0.2	—	µA
V_{IH}	CE Input Logic-High Voltage (AP2139)	—	1.2	—	—	V
V_{IL}	CE Input Logic-Low Voltage (AP2139)	—	—	—	0.3	V
θ_{JC}	Thermal Resistance	SOT-23-3	—	81.9	—	°C/W

NOT RECOMMENDED FOR NEW DESIGN

© 2024 Copyright Diodes Incorporated. All Rights Reserved.

Electrical Characteristics AP2138/2139-2.5 (@V_{IN} = 3.5V, V_{CE} = 3.5V (AP2139), T_J = +25°C, I_{OUT} = 40mA, C_{IN} = C_{OUT} = 1µF, **Bold** typeface applies -40°C ≤ T_J ≤ +85°C, unless otherwise specified.) (continued)

Symbol	Parameter	Conditions	Min	Typ	Max	Unit
V_{IN}	Input Voltage	—	—	—	6.0	V
V_{OUT}	Output Voltage	—	2.450	2.500	2.550	V
I_Q	Quiescent Current	I_{OUT} = 0	—	1.0	1.5	µA
I_{STD}	Standby Current (AP2139)	V_{CE} = 0	—	0.1	1	µA
I_{OUT}	Output Current	—	250	—	—	mA
V_{RLOAD}	Load Regulation	1mA ≤ I_{OUT} ≤ 100mA	—	25	40	mV
V_{RLINE}	Line Regulation	3.5V ≤ V_{IN} ≤ 6V	—	6	18	mV
V_{DROP}	Dropout Voltage	I_{OUT} = 10mA	—	25	100	mV
		I_{OUT} = 30mA	—	100	250	
		I_{OUT} = 100mA	—	250	500	
		I_{OUT} = 250mA	—	650	1000	
$\Delta V_{OUT}/\Delta T$	Output Voltage Temperature Coefficient	—	—	±250	—	µV/°C
$(\Delta V_{OUT}/V_{OUT})/\Delta T$		—	—	±100	—	ppm/°C
I_{SHORT}	Short Circuit Current	V_{OUT} = 0	—	50	—	mA
I_{PD}	CE Pull-Down Constant Current (AP2139)	—	—	0.2	—	µA
V_{IH}	CE Input Logic-High Voltage (AP2139)	—	1.2	—	—	V
V_{IL}	CE Input Logic-Low Voltage (AP2139)	—	—	—	0.3	V
θ_{JC}	Thermal Resistance	SOT-23-3	—	81.9	—	°C/W
		SOT-23-5	—	81.9	—	
		SOT-89	—	51.1	—	

NOT RECOMMENDED FOR NEW DESIGN

© 2024 Copyright Diodes Incorporated. All Rights Reserved.

Electrical Characteristics AP2138/2139-2.8 (@V_{IN} = 3.8V, V_{CE} = 3.8V (AP2139), T_J = +25°C, I_{OUT} = 40mA, C_{IN} = C_{OUT} = 1µF, **Bold** typeface applies -40°C ≤ T_J ≤ +85°C, unless otherwise specified.) (continued)

Symbol	Parameter	Conditions	Min	Typ	Max	Unit
V_{IN}	Input Voltage	—	—	—	6.0	V
V_{OUT}	Output Voltage	—	2.744	2.800	2.856	V
I_Q	Quiescent Current	I_{OUT} = 0	—	1.0	1.5	µA
I_{STD}	Standby Current (AP2139)	V_{CE} = 0	—	0.1	1	µA
I_{OUT}	Output Current	—	250	—	—	mA
V_{RLOAD}	Load Regulation	1mA ≤ I_{OUT} ≤ 100mA	—	25	40	mV
V_{RLINE}	Line Regulation	3.8V ≤ V_{IN} ≤ 6V	—	6	18	mV
V_{DROP}	Dropout Voltage	I_{OUT} = 10mA	—	25	100	mV
		I_{OUT} = 30mA	—	70	200	
		I_{OUT} = 100mA	—	250	500	
		I_{OUT} = 250mA	—	500	800	
$\Delta V_{OUT}/\Delta T$	Output Voltage Temperature Coefficient	—	—	±280	—	µV/°C
$(\Delta V_{OUT}/V_{OUT})/\Delta T$		—	—	±100	—	ppm/°C
I_{SHORT}	Short Circuit Current	V_{OUT} = 0	—	50	—	mA
I_{PD}	CE Pull-Down Constant Current (AP2139)	—	—	0.2	—	µA
V_{IH}	CE Input Logic-High Voltage (AP2139)	—	1.2	—	—	V
V_{IL}	CE Input Logic-Low Voltage (AP2139)	—	—	—	0.3	V
θ_{JC}	Thermal Resistance	SOT-23-3	—	81.9	—	°C/W
		SOT-23-5	—	81.9	—	
		SOT-89	—	51.1	—	

NOT RECOMMENDED FOR NEW DESIGN

© 2024 Copyright Diodes Incorporated. All Rights Reserved.

Electrical Characteristics AP2138/2139-3.0 (@V_{IN} = 4V, V_{CE} = 4V (AP2139), T_J = +25°C, I_{OUT} = 40mA, C_{IN} = C_{OUT} = 1µF, **Bold** typeface applies -40°C ≤ T_J ≤ +85°C, unless otherwise specified.) (continued)

Symbol	Parameter	Conditions	Min	Typ	Max	Unit
V_{IN}	Input Voltage	—	—	—	6.0	V
V_{OUT}	Output Voltage	—	2.940	3.000	3.060	V
I_Q	Quiescent Current	I_{OUT} = 0	—	1.0	1.5	µA
I_{STD}	Standby Current (AP2139)	V_{CE} = 0	—	0.1	1	µA
I_{OUT}	Output Current	—	250	—	—	mA
V_{RLOAD}	Load Regulation	1mA ≤ I_{OUT} ≤ 100mA	—	25	40	mV
V_{RLINE}	Line Regulation	4V ≤ V_{IN} ≤ 6V	—	6	18	mV
V_{DROP}	Dropout Voltage	I_{OUT} = 10mA	—	25	100	mV
		I_{OUT} = 30mA	—	70	200	
		I_{OUT} = 100mA	—	200	400	
		I_{OUT} = 250mA	—	450	700	
$\Delta V_{OUT}/\Delta T$	Output Voltage Temperature Coefficient	—	—	±300	—	µV/°C
$(\Delta V_{OUT}/V_{OUT})/\Delta T$		—	—	±100	—	ppm/°C
I_{SHORT}	Short Circuit Current	V_{OUT} = 0	—	50	—	mA
I_{PD}	CE Pull-Down Constant Current (AP2139)	—	—	0.2	—	µA
V_{IH}	CE Input Logic-High Voltage (AP2139)	—	1.2	—	—	V
V_{IL}	CE Input Logic-Low Voltage (AP2139)	—	—	—	0.3	V
θ_{JC}	Thermal Resistance	SOT-23-3	—	81.9	—	°C/W
		SOT-23-5	—	81.9	—	
		SOT-89	—	51.1	—	

NOT RECOMMENDED FOR NEW DESIGN

© 2024 Copyright Diodes Incorporated. All Rights Reserved.

Electrical Characteristics AP2138/2139-3.3 (@V_{IN} = 4.3V, V_{CE} = 4.3V (AP2139), T_J = +25°C, I_{OUT} = 40mA, C_{IN} = C_{OUT} = 1µF, **Bold** typeface applies -40°C ≤ T_J ≤ +85°C, unless otherwise specified.) (continued)

Symbol	Parameter	Conditions	Min	Typ	Max	Unit
V_{IN}	Input Voltage	—	—	—	6.0	V
V_{OUT}	Output Voltage	—	3.234	3.300	3.366	V
I_Q	Quiescent Current	I_{OUT} = 0	—	1.0	1.5	µA
I_{STD}	Standby Current (AP2139)	V_{CE} = 0	—	0.1	1	µA
I_{OUT}	Output Current	—	250	—	—	mA
V_{RLOAD}	Load Regulation	1mA ≤ I_{OUT} ≤ 100mA	—	25	40	mV
V_{RLINE}	Line Regulation	4.3V ≤ V_{IN} ≤ 6V	—	6	18	mV
V_{DROP}	Dropout Voltage	I_{OUT} = 10mA	—	20	100	mV
		I_{OUT} = 30mA	—	50	200	
		I_{OUT} = 100mA	—	160	300	
		I_{OUT} = 250mA	—	400	600	
$\Delta V_{OUT}/\Delta T$	Output Voltage Temperature Coefficient	—	—	±330	—	µV/°C
$(\Delta V_{OUT}/V_{OUT})/\Delta T$		—	—	±100	—	ppm/°C
I_{SHORT}	Short Circuit Current	V_{OUT} = 0	—	50	—	mA
I_{PD}	CE Pull-Down Constant Current (AP2139)	—	—	0.2	—	µA
V_{IH}	CE Input Logic-High Voltage (AP2139)	—	1.2	—	—	V
V_{IL}	CE Input Logic-Low Voltage (AP2139)	—	—	—	0.3	V
θ_{JC}	Thermal Resistance	SOT-23-3	—	81.9	—	°C/W
		SOT-23-5	—	81.9	—	
		SOT-89	—	51.1	—	

NOT RECOMMENDED FOR NEW DESIGN

© 2024 Copyright Diodes Incorporated. All Rights Reserved.

Electrical Characteristics AP2138/2139-3.6 (@V_{IN} = 4.6V, T_J = +25°C, I_{OUT} = 40mA, C_{IN} = C_{OUT} = 1µF, **Bold** typeface applies -40°C ≤ T_J ≤ +85°C, unless otherwise specified.) (continued)

Symbol	Parameter	Conditions	Min	Typ	Max	Unit
V_{IN}	Input Voltage	—	—	—	6.0	V
V_{OUT}	Output Voltage	—	3.528	3.600	3.672	V
I_Q	Quiescent Current	I_{OUT} = 0	—	1.0	1.5	µA
I_{OUT}	Output Current	—	250	—	—	mA
V_{RLOAD}	Load Regulation	1mA ≤ I_{OUT} ≤ 100mA	—	25	40	mV
V_{RLINE}	Line Regulation	4.6V ≤ V_{IN} ≤ 6V	—	6	18	mV
V_{DROP}	Dropout Voltage	I_{OUT} = 10mA	—	20	100	mV
		I_{OUT} = 30mA	—	50	200	
		I_{OUT} = 100mA	—	160	300	
		I_{OUT} = 250mA	—	400	600	
$\Delta V_{OUT}/\Delta T$	Output Voltage Temperature Coefficient	—	—	±330	—	µV/°C
$(\Delta V_{OUT}/V_{OUT})/\Delta T$		—	—	±100	—	ppm/°C
I_{SHORT}	Short Circuit Current	V_{OUT} = 0	—	50	—	mA
θ_{JC}	Thermal Resistance	SOT-23-3	—	81.9	—	°C/W
		SOT-89	—	51.1	—	

NOT RECOMMENDED FOR NEW DESIGN

© 2024 Copyright Diodes Incorporated. All Rights Reserved.

Electrical Characteristics AP2138/2139-4.0 (@V_{IN} = 5.0V, T_J = +25°C, I_{OUT} = 40mA, C_{IN} = C_{OUT} = 1µF, **Bold** typeface applies -40°C ≤ T_J ≤ +85°C, unless otherwise specified.) (continued)

Symbol	Parameter	Conditions	Min	Typ	Max	Unit
V_{IN}	Input Voltage	—	—	—	6.0	V
V_{OUT}	Output Voltage	—	3.920	4.000	4.080	V
I_Q	Quiescent Current	I_{OUT} = 0	—	1.0	1.5	µA
I_{OUT}	Output Current	—	250	—	—	mA
V_{RLOAD}	Load Regulation	1mA ≤ I_{OUT} ≤ 100mA	—	25	40	mV
V_{RLINE}	Line Regulation	5V ≤ V_{IN} ≤ 6V	—	6	18	mV
V_{DROP}	Dropout Voltage	I_{OUT} = 10mA	—	20	100	mV
		I_{OUT} = 30mA	—	50	200	
		I_{OUT} = 100mA	—	160	300	
		I_{OUT} = 250mA	—	400	600	
$\Delta V_{OUT}/\Delta T$	Output Voltage Temperature Coefficient	—	—	±330	—	µV/°C
$(\Delta V_{OUT}/V_{OUT})/\Delta T$		—	—	±100	—	ppm/°C
I_{SHORT}	Short Circuit Current	V_{OUT} = 0	—	50	—	mA
θ_{JC}	Thermal Resistance	SOT-23-3	—	81.9	—	°C/W

NOT RECOMMENDED FOR NEW DESIGN

© 2024 Copyright Diodes Incorporated. All Rights Reserved.

Performance Characteristics

Output Voltage vs. Input Voltage

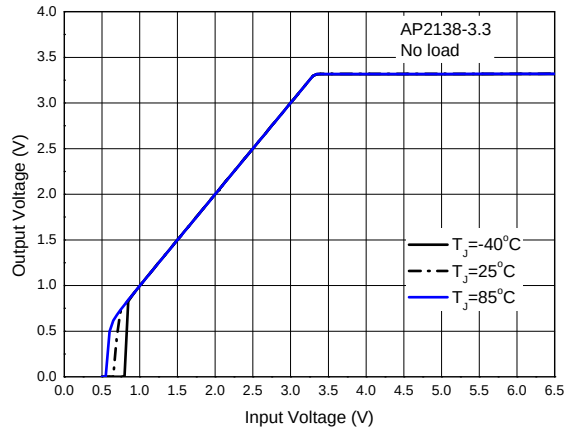

Output Voltage vs. Junction Temperature

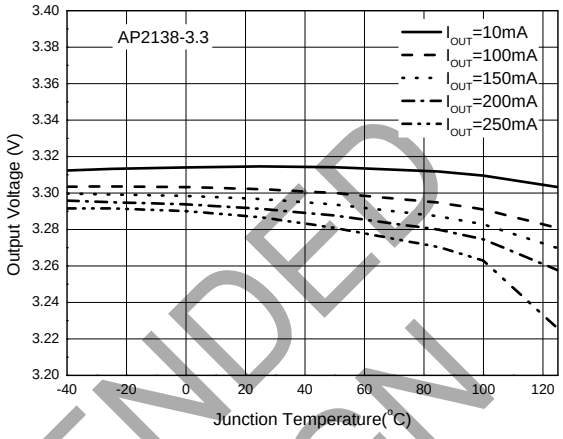

Output Voltage vs. Output Current

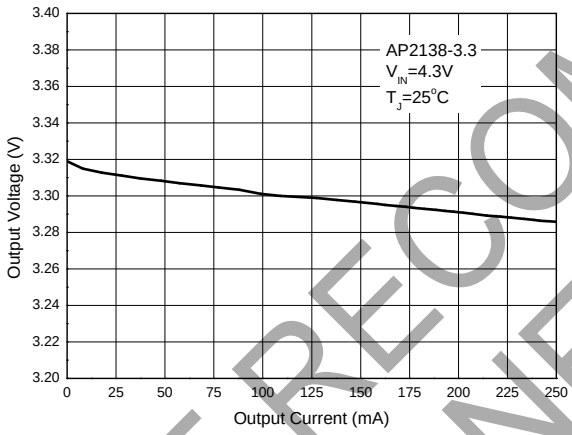

Quiescent Current vs. Input Voltage

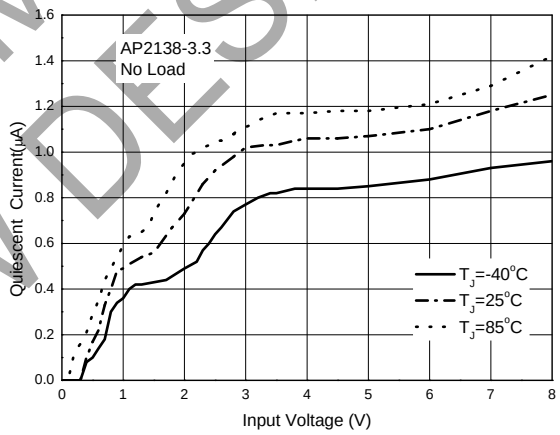

Quiescent Current vs. Junction Temperature

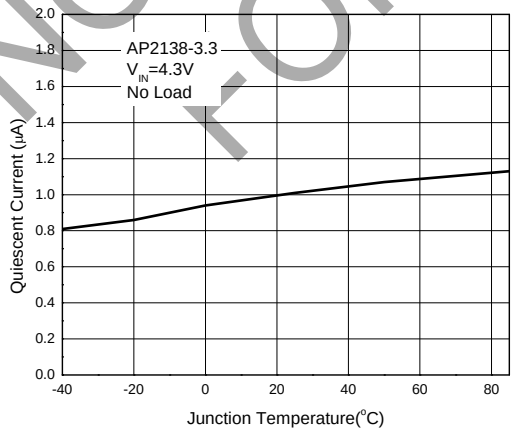

Quiescent Current vs. Output Current

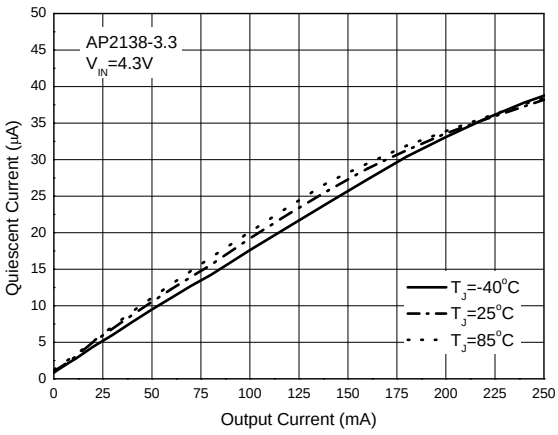

NOT RECOMMENDED FOR NEW DESIGN

© 2024 Copyright Diodes Incorporated. All Rights Reserved.

Performance Characteristics (continued)

Output Voltage vs. Output Current

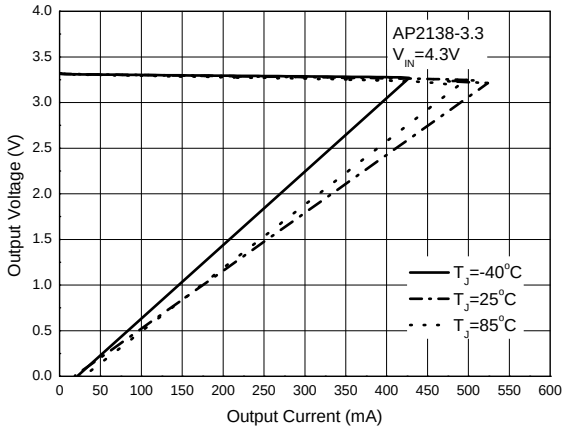

Output Voltage vs. Output Current

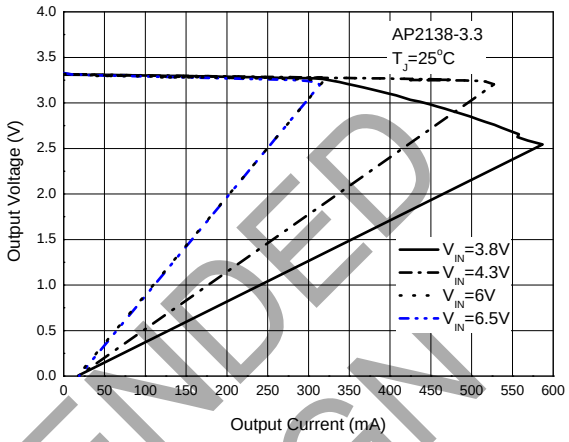

Dropout Voltage vs. Output Current

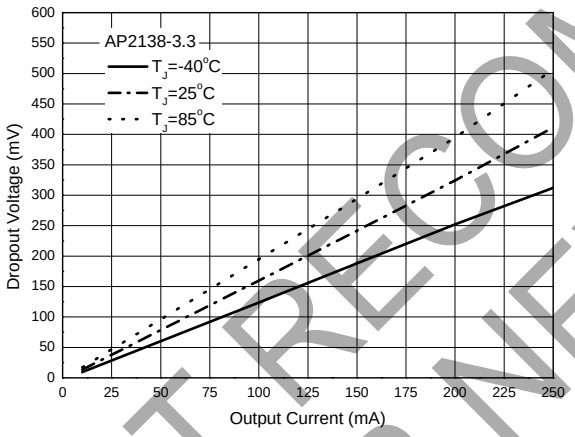

Dropout Voltage vs. Junction Temperature

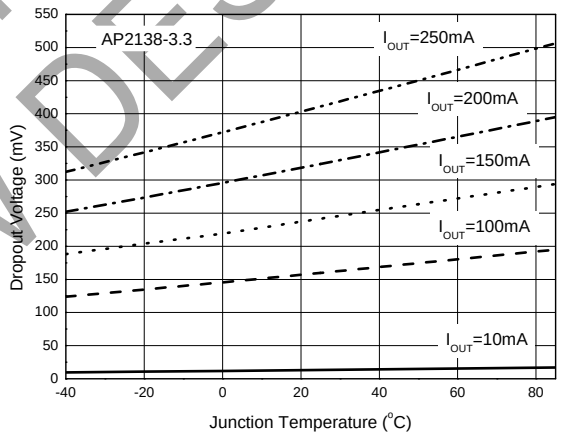

Line Transient (V_{IN}=4.3V to 5.3V, I_{OUT}=10mA)

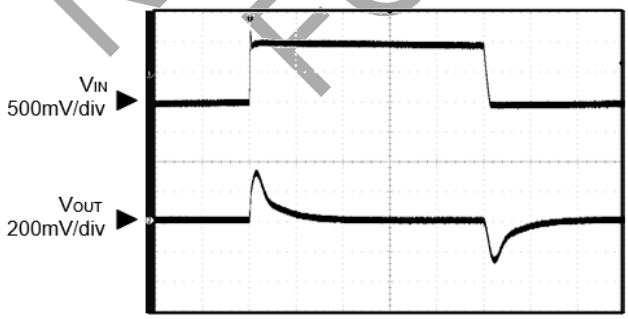

Time 100µs/div

Load Transient (V_{IN}=4.3V, I_{OUT}=1mA to 150mA)

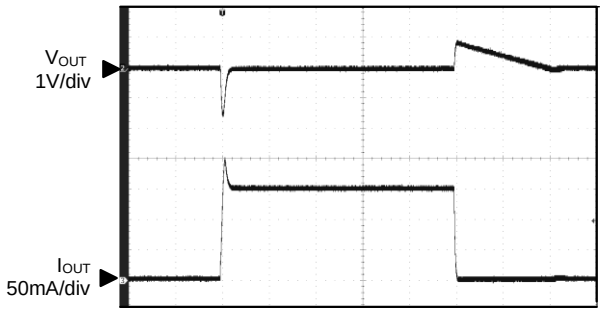

Time 2ms/div

NOT RECOMMENDED FOR NEW DESIGN

© 2024 Copyright Diodes Incorporated. All Rights Reserved.

Performance Characteristics (continued)

Start-Up Response

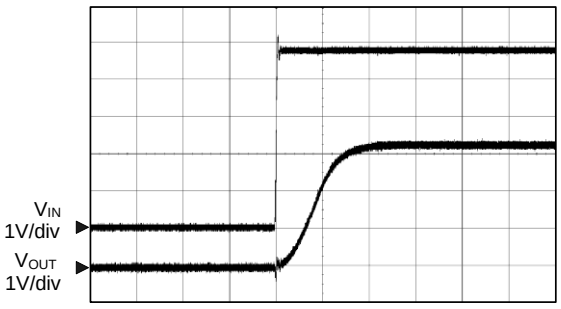

Time 200µs/div

Enable Input Response

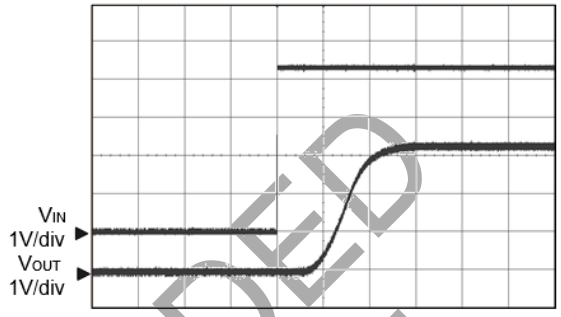

Time 200µs/div

NOT RECOMMENDED FOR NEW DESIGN

© 2024 Copyright Diodes Incorporated. All Rights Reserved.

Ordering Information

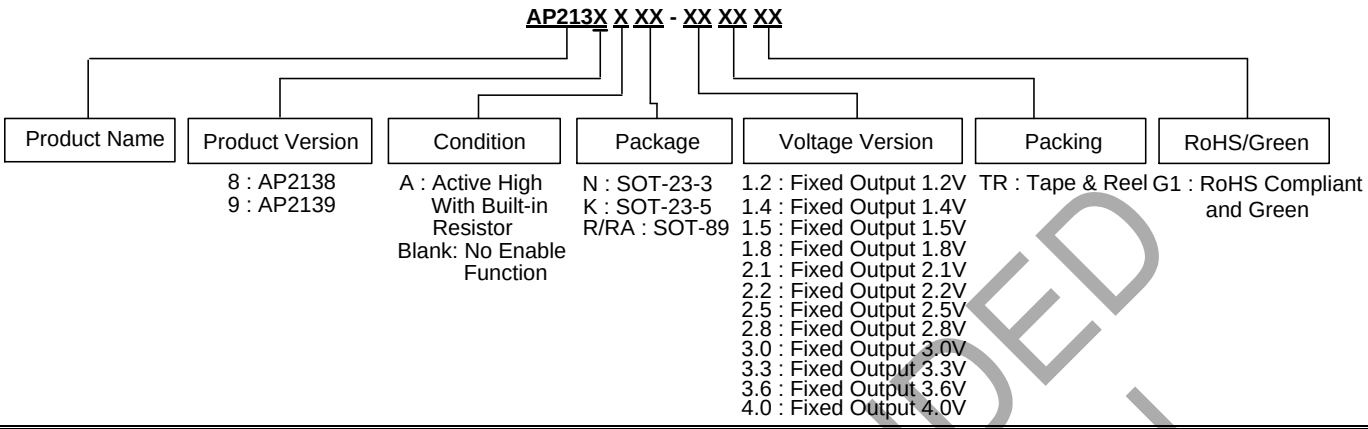

Orderable Part Number	Package	Temperature Range	Condition	Marking ID	Packing	
					Qty.	Carrier
AP2138N-1.2TRG1	SOT-23-3	-40 to +85°C	1.2V	JB	3000	Tape & Reel
AP2138N-1.4TRG1			1.4V	JC	3000	Tape & Reel
AP2138N-1.5TRG1			1.5V	JD	3000	Tape & Reel
AP2138N-1.8TRG1			1.8V	JE	3000	Tape & Reel
AP2138N-2.1TRG1			2.1V	JF	3000	Tape & Reel
AP2138N-2.2TRG1			2.2V	PT	3000	Tape & Reel
AP2138N-2.5TRG1			2.5V	PU	3000	Tape & Reel
AP2138N-2.8TRG1			2.8V	PV	3000	Tape & Reel
AP2138N-3.0TRG1			3.0V	PW	3000	Tape & Reel
AP2138N-3.3TRG1			3.3V	PX	3000	Tape & Reel
AP2138N-3.6TRG1			3.6V	PY	3000	Tape & Reel
AP2138N-4.0TRG1			4.0V (NRND) (Note 7)	UA	3000	Tape & Reel
AP2138R-1.2TRG1	SOT-89	-40 to +85°C	1.2V (R) (NRND) (Note 7)	J2A	1000	Tape & Reel
AP2138R-1.4TRG1			1.4V (R) (NRND) (Note 7)	J2B	1000	Tape & Reel
AP2138R-1.5TRG1			1.5V (R) (NRND) (Note 7)	J2C	1000	Tape & Reel
AP2138R-1.8TRG1			1.8V (R) (NRND) (Note 7)	J2D	1000	Tape & Reel
AP2138R-2.5TRG1			2.5V (R) (NRND) (Note 7)	J2E	1000	Tape & Reel
AP2138R-2.8TRG1			2.8V ® (NRND) (Note 7)	J2F	1000	Tape & Reel
AP2138R-3.0TRG1			3.0V (R) (NRND) (Note 7)	J2G	1000	Tape & Reel
AP2138R-3.3TRG1			3.3V (R) (NRND) (Note 7)	J2H	1000	Tape & Reel

Note 7: NRND: Not Recommended for New Design.

NOT RECOMMENDED FOR NEW DESIGN

© 2024 Copyright Diodes Incorporated. All Rights Reserved.

Ordering Information (continued)

Orderable Part Number	Package	Temperature Range	Condition	Marking ID	Packing	
					Qty.	Carrier
AP2138R-3.6TRG1	SOT-89	-40 to +85°C	3.6V (R) (NRND) (Note 7)	J2J	1000	Tape & Reel
AP2138RA-1.2TRG1			1.2V (RA) (NRND) (Note 7)	J2K	1000	Tape & Reel
AP2138RA-1.4TRG1			1.4V (RA) (NRND) (Note 7)	J2M	1000	Tape & Reel
AP2138RA-1.5TRG1			1.5V (RA) (NRND) (Note 7)	J2N	1000	Tape & Reel
AP2138RA-1.8TRG1			1.8V (RA) (NRND) (Note 7)	J2P	1000	Tape & Reel
AP2138RA-2.5TRG1			2.5V (RA) (NRND) (Note 7)	J2R	1000	Tape & Reel
AP2138RA-2.8TRG1			2.8V (RA) (NRND) (Note 7)	J2S	1000	Tape & Reel
AP2138RA-3.0TRG1			3.0V (RA) (NRND) (Note 7)	J2T	1000	Tape & Reel
AP2138RA-3.3TRG1			3.3V (RA) (NRND) (Note 7)	J2U	1000	Tape & Reel
AP2139AK-1.2TRG1	SOT-23-5	-40 to +85°C	Active High with Built-in Resistor	J2A	3000	Tape & Reel
AP2139AK-1.4TRG1			Active High with Built-in Resistor	J2B	3000	Tape & Reel
AP2139AK-1.5TRG1			Active High with Built-in Resistor	J2C	3000	Tape & Reel
AP2139AK-1.8TRG1			Active High with Built-in Resistor	J2D	3000	Tape & Reel
AP2139AK-2.5TRG1			Active High with Built-in Resistor	J2E	3000	Tape & Reel
AP2139AK-2.8TRG1			Active High with Built-in Resistor	J2F	3000	Tape & Reel
AP2139AK-3.0TRG1			Active High with Built-in Resistor	J2G	3000	Tape & Reel
AP2139AK-3.3TRG1			Active High with Built-in Resistor	J2H	3000	Tape & Reel

Note 7: NRND: Not Recommended for New Design.

NOT RECOMMENDED FOR NEW DESIGN

© 2024 Copyright Diodes Incorporated. All Rights Reserved.

Marking Information

(1) SOT-23-3

(Top View)

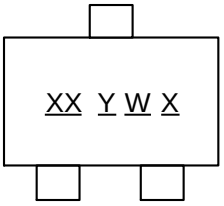

XX : Identification Code
Y : Year 0 to 9
W : Week : A to Z : 1 to 26 week;
a to z : 27 to 52 week; z represents
52 and 53 week
X : Internal Code

(2) SOT-89

(Top View)

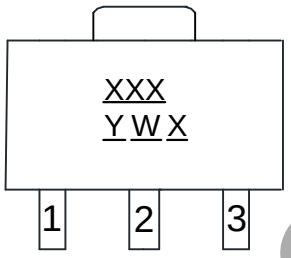

XXX : Identification Code
Y : Year : 0 to 9
W : Week : A to Z : 1 to 26 week;
a to z : 27 to 52 week;
z represents 52 and 53 week
X : Internal Code

(3) SOT-23-5

(Top View)

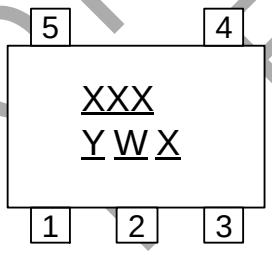

XXX : Identification Code
Y : Year 0 to 9
W : Week : A to Z : 1 to 26 week;
a to z : 27 to 52 week; z represents
52 and 53 week
X : Internal Code

NOT RECOMMENDED FOR NEW DESIGN

© 2024 Copyright Diodes Incorporated. All Rights Reserved.

Package Outline Dimensions (All dimensions in mm(inch).)

Please see http://www.diodes.com/package-outlines.html for the latest version.

(1) Package Type: SOT-23-3

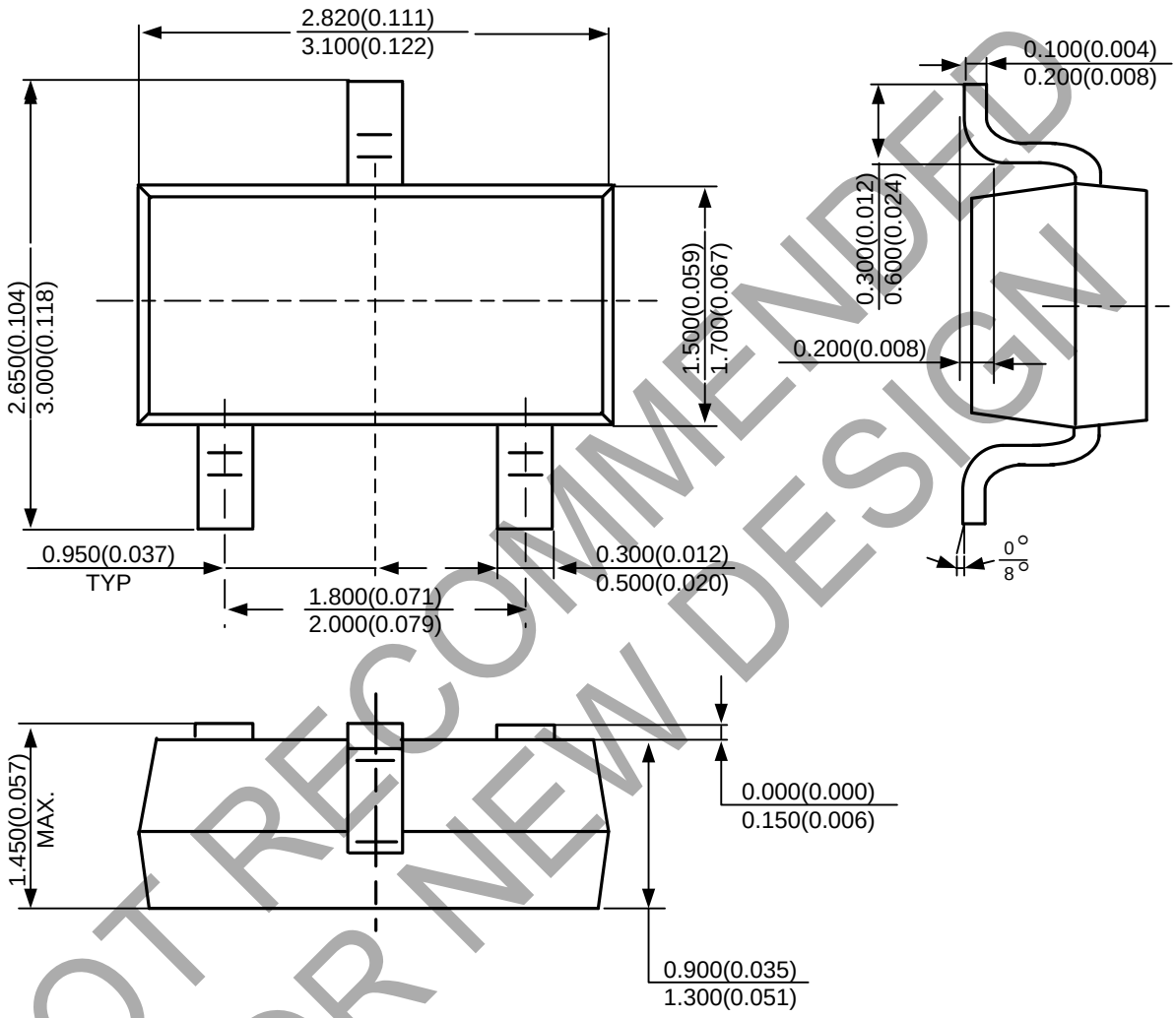

NOT RECOMMENDED FOR NEW DESIGN

© 2024 Copyright Diodes Incorporated. All Rights Reserved.

Package Outline Dimensions (continued) (All dimensions in mm(inch).)

Please see http://www.diodes.com/package-outlines.html for the latest version.

(2) Package Type: SOT-23-5

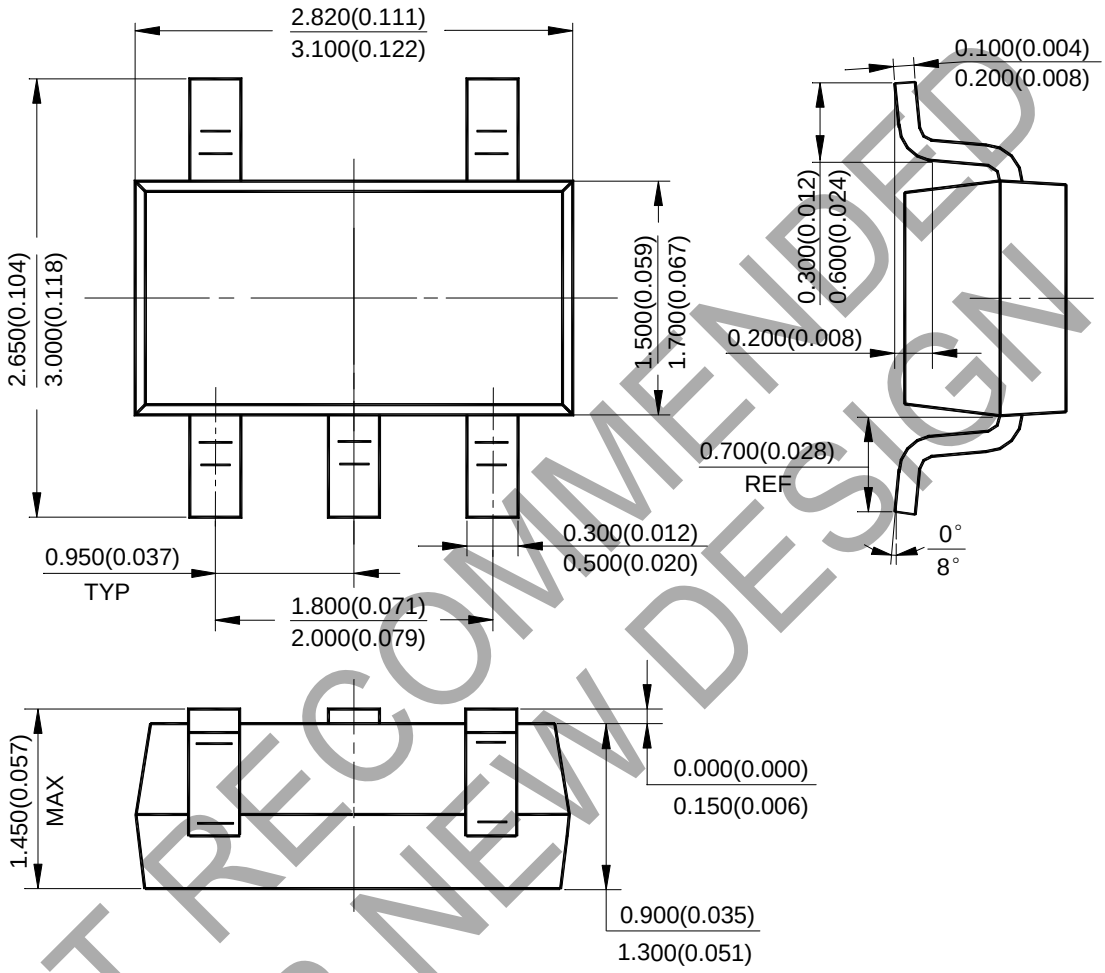

NOT RECOMMENDED FOR NEW DESIGN

© 2024 Copyright Diodes Incorporated. All Rights Reserved.

Package Outline Dimensions (continued) (All dimensions in mm(inch).)

Please see http://www.diodes.com/package-outlines.html for the latest version.

(3) Package Type: SOT-89

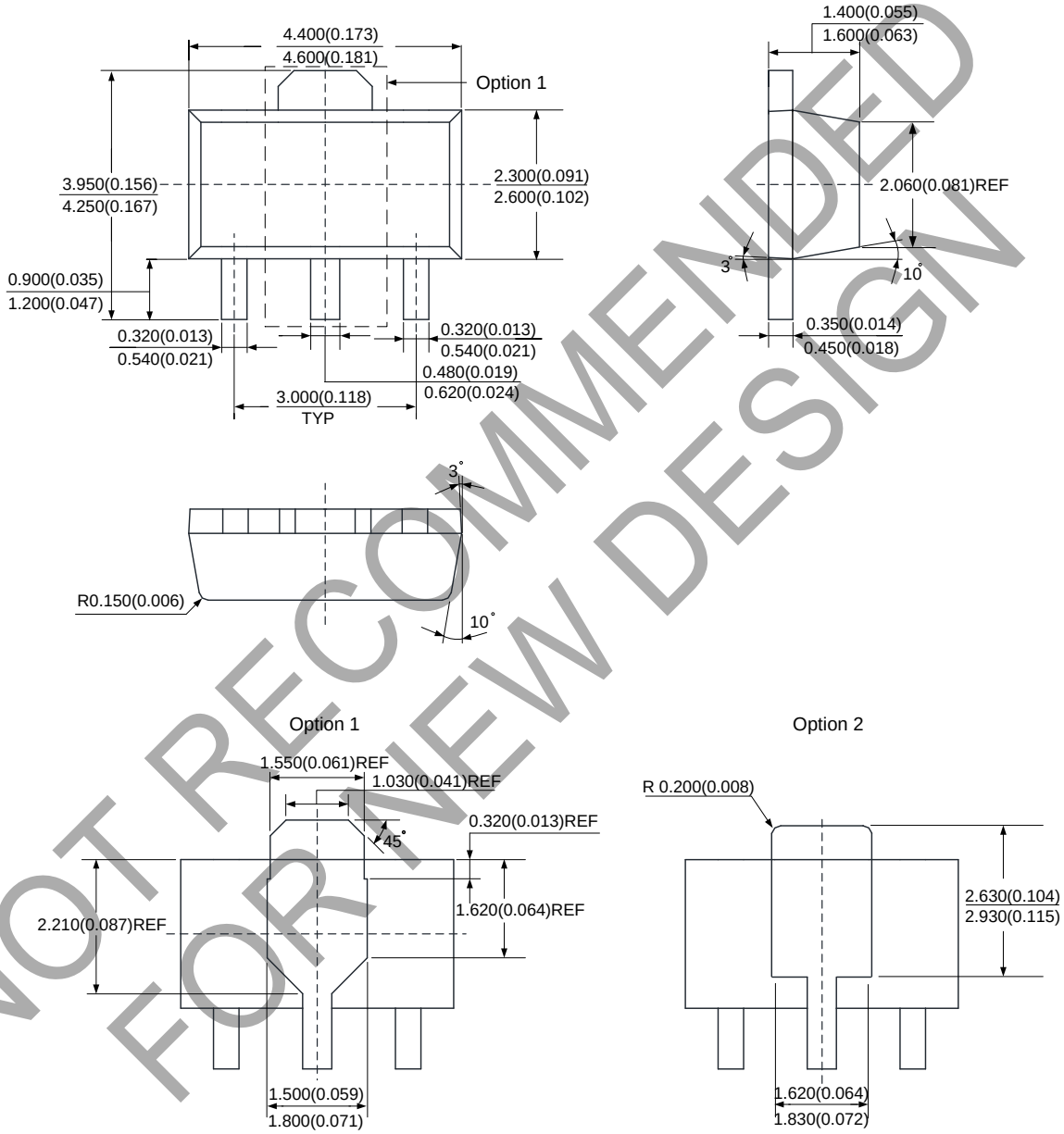

NOT RECOMMENDED FOR NEW DESIGN

© 2024 Copyright Diodes Incorporated. All Rights Reserved.

Suggested Pad Layout

Please see http://www.diodes.com/package-outlines.html for the latest version.

(1) Package Type: SOT-23-3

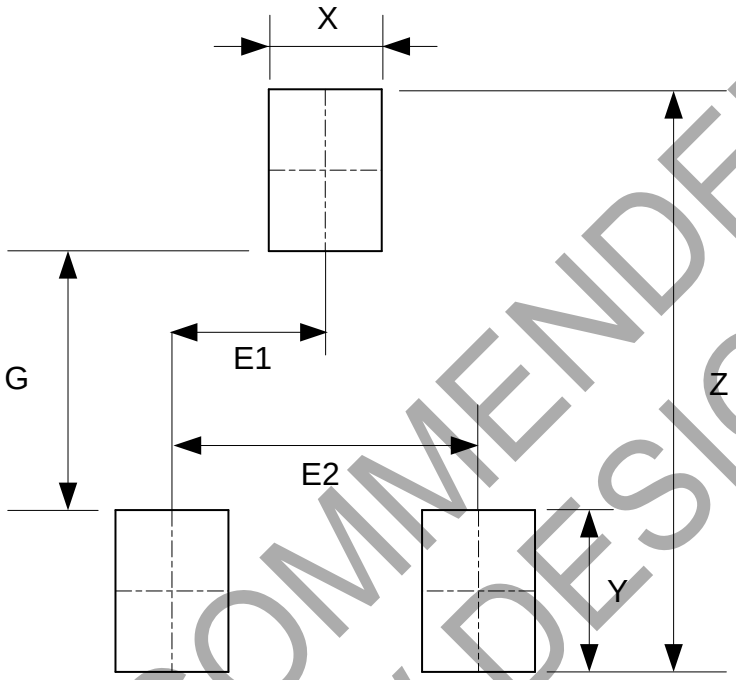

Dimensions	Z (mm)/(inch)	G (mm)/(inch)	X (mm)/(inch)	Y (mm)/(inch)	E1 (mm)/(inch)	E2 (mm)/(inch)
Value	3.600/0.142	1.600/0.063	0.700/0.028	1.000/0.039	0.950/0.037	1.900/0.075

NOT RECOMMENDED FOR NEW DESIGN

© 2024 Copyright Diodes Incorporated. All Rights Reserved.

Suggested Pad Layout (continued)

Please see http://www.diodes.com/package-outlines.html for the latest version.

(2) Package Type: SOT-23-5

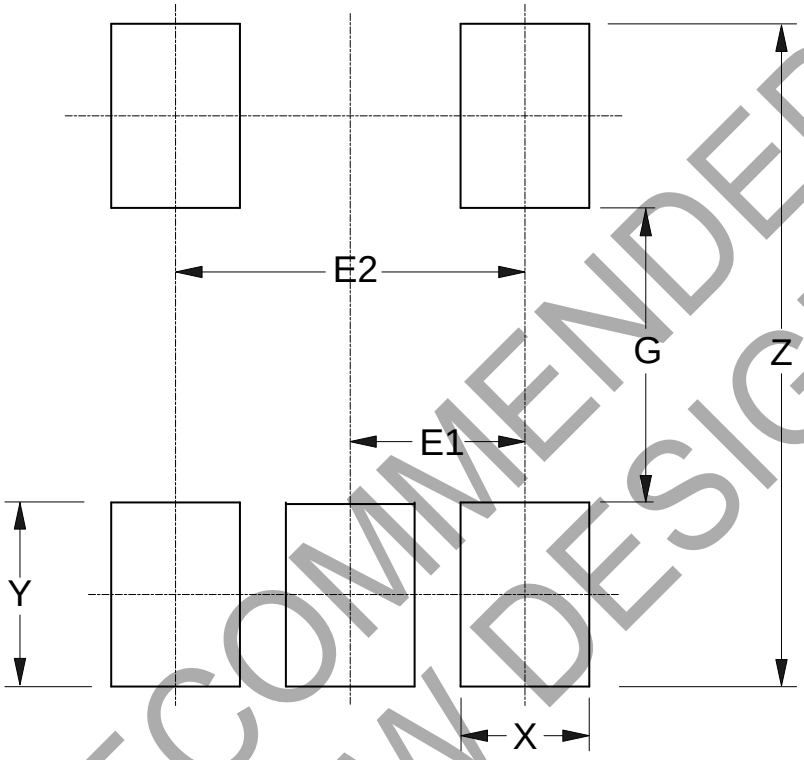

Dimensions	Z (mm)/(inch)	G (mm)/(inch)	X (mm)/(inch)	Y (mm)/(inch)	E1 (mm)/(inch)	E2 (mm)/(inch)
Value	3.600/0.142	1.600/0.063	0.700/0.028	1.000/0.039	0.950/0.037	1.900/0.075

NOT RECOMMENDED FOR NEW DESIGN

© 2024 Copyright Diodes Incorporated. All Rights Reserved.

Suggested Pad Layout (continued)

Please see http://www.diodes.com/package-outlines.html for the latest version.

(3) Package Type: SOT-89

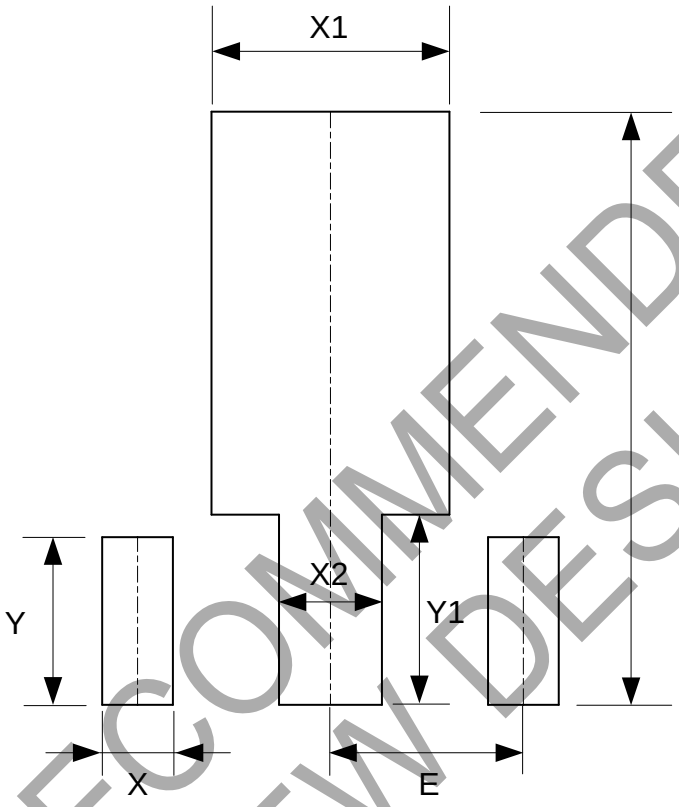

Dimensions	Z (mm)/(inch)	X (mm)/(inch)	X1 (mm)/(inch)	X2 (mm)/(inch)	Y (mm)/(inch)	Y1 (mm)/(inch)	E (mm)/(inch)
Value	4.600/0.181	0.550/0.022	1.850/0.073	0.800/0.031	1.300/0.051	1.475/0.058	1.500/0.059

NOT RECOMMENDED FOR NEW DESIGN

© 2024 Copyright Diodes Incorporated. All Rights Reserved.

IMPORTANT NOTICE

1. DIODES INCORPORATED (Diodes) AND ITS SUBSIDIARIES MAKE NO WARRANTY OF ANY KIND, EXPRESS OR IMPLIED, WITH REGARDS TO ANY INFORMATION CONTAINED IN THIS DOCUMENT, INCLUDING, BUT NOT LIMITED TO, THE IMPLIED WARRANTIES OF MERCHANTABILITY, FITNESS FOR A PARTICULAR PURPOSE OR NON-INFRINGEMENT OF THIRD PARTY INTELLECTUAL PROPERTY RIGHTS (AND THEIR EQUIVALENTS UNDER THE LAWS OF ANY JURISDICTION).

2. The Information contained herein is for informational purpose only and is provided only to illustrate the operation of Diodes' products described herein and application examples. Diodes does not assume any liability arising out of the application or use of this document or any product described herein. This document is intended for skilled and technically trained engineering customers and users who design with Diodes' products. Diodes' products may be used to facilitate safety-related applications; however, in all instances customers and users are responsible for (a) selecting the appropriate Diodes products for their applications, (b) evaluating the suitability of Diodes' products for their intended applications, (c) ensuring their applications, which incorporate Diodes' products, comply the applicable legal and regulatory requirements as well as safety and functional-safety related standards, and (d) ensuring they design with appropriate safeguards (including testing, validation, quality control techniques, redundancy, malfunction prevention, and appropriate treatment for aging degradation) to minimize the risks associated with their applications.

3. Diodes assumes no liability for any application-related information, support, assistance or feedback that may be provided by Diodes from time to time. Any customer or user of this document or products described herein will assume all risks and liabilities associated with such use, and will hold Diodes and all companies whose products are represented herein or on Diodes' websites, harmless against all damages and liabilities.

4. Products described herein may be covered by one or more United States, international or foreign patents and pending patent applications. Product names and markings noted herein may also be covered by one or more United States, international or foreign trademarks and trademark applications. Diodes does not convey any license under any of its intellectual property rights or the rights of any third parties (including third parties whose products and services may be described in this document or on Diodes' website) under this document.

5. Diodes' products are provided subject to Diodes' Standard Terms and Conditions of Sale (https://www.diodes.com/about/company/terms-and-conditions/terms-and-conditions-of-sales/) or other applicable terms. This document does not alter or expand the applicable warranties provided by Diodes. Diodes does not warrant or accept any liability whatsoever in respect of any products purchased through unauthorized sales channel.

6. Diodes' products and technology may not be used for or incorporated into any products or systems whose manufacture, use or sale is prohibited under any applicable laws and regulations. Should customers or users use Diodes' products in contravention of any applicable laws or regulations, or for any unintended or unauthorized application, customers and users will (a) be solely responsible for any damages, losses or penalties arising in connection therewith or as a result thereof, and (b) indemnify and hold Diodes and its representatives and agents harmless against any and all claims, damages, expenses, and attorney fees arising out of, directly or indirectly, any claim relating to any noncompliance with the applicable laws and regulations, as well as any unintended or unauthorized application.

7. While efforts have been made to ensure the information contained in this document is accurate, complete and current, it may contain technical inaccuracies, omissions and typographical errors. Diodes does not warrant that information contained in this document is error-free and Diodes is under no obligation to update or otherwise correct this information. Notwithstanding the foregoing, Diodes reserves the right to make modifications, enhancements, improvements, corrections or other changes without further notice to this document and any product described herein. This document is written in English but may be translated into multiple languages for reference. Only the English version of this document is the final and determinative format released by Diodes.

8. Any unauthorized copying, modification, distribution, transmission, display or other use of this document (or any portion hereof) is prohibited. Diodes assumes no responsibility for any losses incurred by the customers or users or any third parties arising from any such unauthorized use.

9. This Notice may be periodically updated with the most recent version available at https://www.diodes.com/about/company/terms-and-conditions/important-notice

The Diodes logo is a registered trademark of Diodes Incorporated in the United States and other countries.
All other trademarks are the property of their respective owners.
© 2024 Diodes Incorporated. All Rights Reserved.

www.diodes.com

NOT RECOMMENDED FOR NEW DESIGN

© 2024 Copyright Diodes Incorporated. All Rights Reserved.

ENTEGRECİ

Bu belge www.entegreci.com üzerinden sunulmaktadır.

Elektronik komponent tedarikinde Entegreci

Entegreci, Eskişehir merkezli, Türkiye geneline satış yapan bir elektronik komponent mağazasıdır. Entegreler (IC), mikrodenetleyiciler, transistörler, diyotlar, pasif elemanlar, konnektörler, modüller ve geliştirme kartları tek adetten seri üretim adetlerine kadar satılır. Ürün sayfalarında güncel stok durumunu, fiyatı ve datasheet bağlantısını bulabilirsiniz.

Parça koduyla arama

Üretici parça numarasını yazın; stok ve fiyatı hemen görün.

www.entegreci.com

Ürün kategorileri

Entegreden kapasitöre tüm elektronik komponent kategorileri.

Kategorilere göz atın

Üreticiler

Aradığınız üreticinin ürünlerini tek sayfada inceleyin.

Üreticileri görün

Toplu alım ve teklif

Listede olmayan ya da yüksek adetli parçalar için teklif isteyin.

Teklif isteyin

www.entegreci.com | **destek@entegreci.com** | **0850 305 90 34**

Entegreci is an online electronic components store based in Türkiye. Search by manufacturer part number to see stock, prices and datasheets for integrated circuits, microcontrollers, transistors, passive components and connectors, or request a quote for parts that are not listed.

Bu sayfa Entegreci tarafından eklenmiştir. Belgenin önceki sayfaları asıl yayıncısına aittir ve içeriği değiştirilmemiştir; en güncel sürüm için belgenin yayıncısına başvurun.