Description

The AP2210 is a 300mA ULDO regulator which provides very low noise, ultra-low dropout voltage (typically 250mV at 300mA), very low standby current (1μA maximum), and excellent power supply ripple rejection (PSRR 75dB at 100Hz). This device is used in battery powered applications, such as handsets and PDAs; and in noise sensitive applications, such as RF electronics.

The AP2210 also features individual logic compatible enable/shutdown control inputs, a low power shutdown mode for extended battery life, overcurrent protection, overtemperature protection, and reversed current protection.

The AP2210 has 2.5V, 2.8V, 3.0V, 3.3V, 3.6V, 4.0V, 5.0V, and ADJ versions.

The AP2210 is available in the space saving SOT-23-3 and SOT-23-5 packages.

Pin Assignments

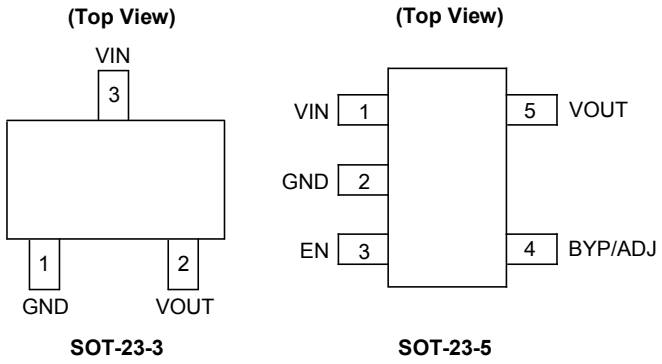

SOT-23-3 **SOT-23-5**

Features

- Up to 300mA Output Current
- Excellent ESR Stability
- Low Standby Current
- Low Dropout Voltage: V_{DROP} = 250mV at 300mA
- High Output Accuracy: ±1%
- Good Ripple Rejection Ability: 75dB at 100Hz and I_{OUT} = 100μA
- Tight Load and Line Regulation
- Low Temperature Coefficient
- Over-Current Protection
- Thermal Protection
- Reverse Current Protection
- Logic-controlled Enable
- Moisture Sensitivity: Level 3 Per J-STD-020
- Terminals: SOT-23-3/SOT-23-5 Finish—Matte Tin Plated Leads, Solderable per MIL-STD-202, Method 208 e3
- Weight:
  - SOT-23-3: 0.014 grams (Approximate)
  - SOT-23-5: 0.015 grams (Approximate)
  - **Totally Lead-Free; RoHS Compliant (Notes 1 & 2)**
- Lead-Free Packages, Available in "Green" Molding Compound: SOT-23-3, SOT-23-5
  - **Totally Lead-Free & Fully RoHS Compliant (Notes 1 & 2)**
  - **Halogen and Antimony Free. "Green" Device (Note 3)**
- **For automotive applications requiring specific change control (i.e. parts qualified to AEC-Q100/101/200, PPAP capable, and manufactured in IATF 16949 certified facilities), please contact us or your local Diodes representative. https://www.diodes.com/quality/product-definitions/**

Applications

- Cellular Phones
- Cordless Phones
- Wireless Communicators
- PDAs/Palmtops
- PC Motherboards
- Consumer Electronics

Notes:
1. No purposely added lead. Fully EU Directive 2002/95/EC (RoHS), 2011/65/EU (RoHS 2) & 2015/863/EU (RoHS 3) compliant.
2. See https://www.diodes.com/quality/lead-free/ for more information about Diodes Incorporated's definitions of Halogen- and Antimony-free, "Green" and Lead-free.
3. Halogen- and Antimony-free "Green" products are defined as those which contain <900ppm bromine, <900ppm chlorine (<1500ppm total Br + Cl) and <1000ppm antimony compounds.

© Diodes Incorporated

Typical Applications Circuit (Note 4)

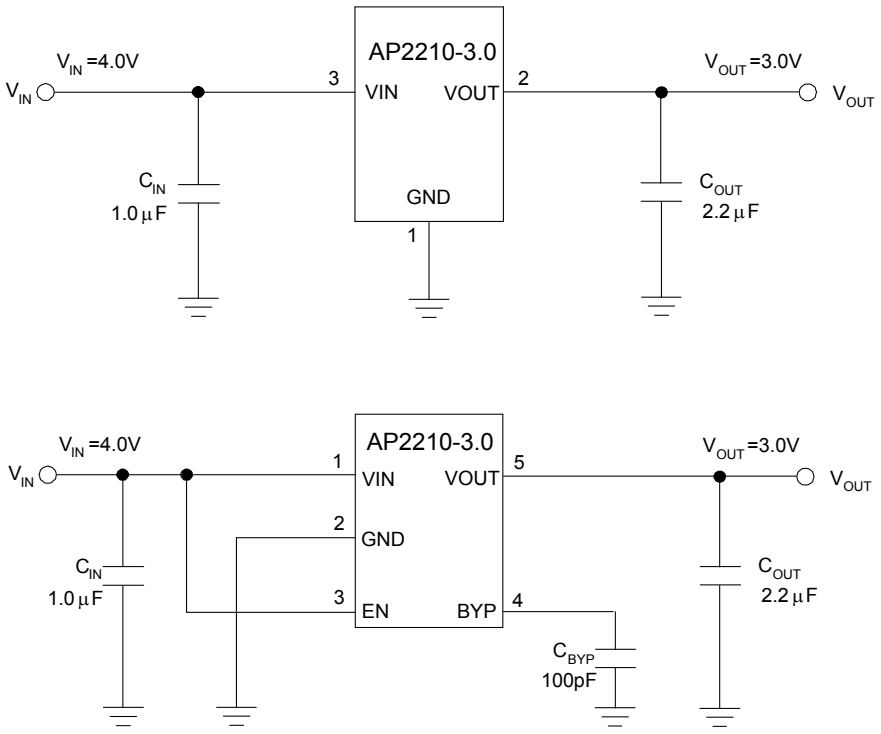

For Fixed Version

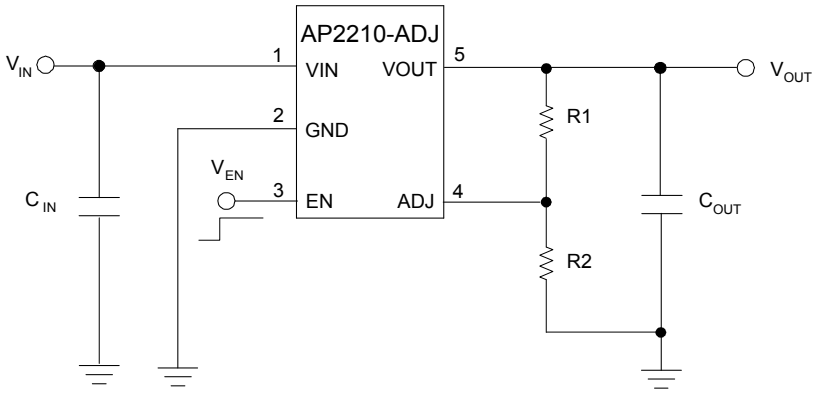

V_{OUT} = 1.25V*(1+R2/R1)

For Adjustable Version

Notes: 4. Dropout voltage is 250mV when T_A = +25°C. In order to obtain a normal output voltage, V_{OUT}+0.25V is the minimum input voltage which will result a low PSRR, imposing a bad influence on system. Therefore, the recommended input voltage is V_{OUT}+1V to 13.2V. For AP2210-3.0 version, its input voltage can be set from 4V (V_{OUT}+1V) to 13.2V.

© Diodes Incorporated

Pin Descriptions

Pin Number		Pin Name	Function
SOT23-3	SOT23-5		
1	2	GND	Ground
2	5	VOUT	Regulated output voltage
3	1	VIN	Input voltage
–	3	EN	Enable input: CMOS or TTL compatible input. Logic high=enable, logic low=shutdown
–	4	BYP/ADJ	Bypass capacitor for low noise operation/Adjustable Output

Functional Block Diagram

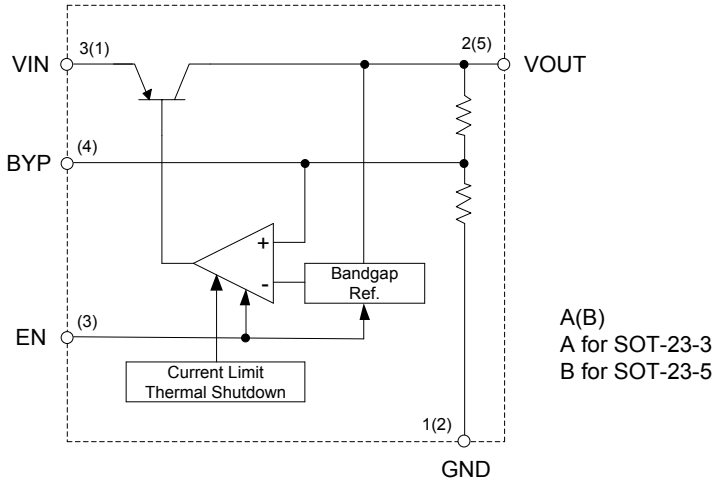

Fixed Version

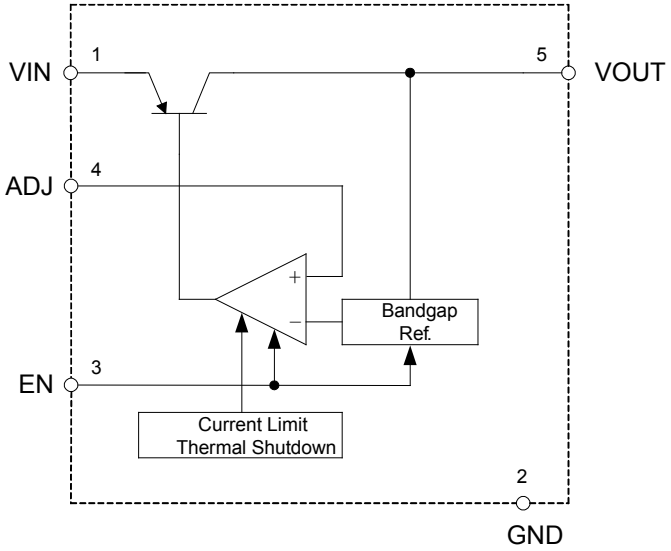

ADJ Version (For SOT-23-5)

© Diodes Incorporated

Absolute Maximum Ratings (Note 5)

Symbol	Parameter	Rating		Unit
V_{IN}	Supply Input Voltage	15		V
V_{EN}	Enable Input Voltage	15		V
P_D	Power Dissipation	Internally Limited (Thermal Protection)		W
T_{LEAD}	Lead Temperature (Soldering, 10sec)	+260		°C
T_J	Junction Temperature	+150		°C
T_{STG}	Storage Temperature	-65 to +150		°C
ESD	ESD (Machine Model)	300		V
θ_{JA}	Thermal Resistance (No Heatsink)	SOT-23-3	200	°C/W
		SOT-23-5	200	

Notes: 5. Stresses greater than those listed under “Absolute Maximum Ratings” may cause permanent damage to the device. These are stress ratings only, and functional operation of the device at these or any other conditions beyond those indicated under “Recommended Operating Conditions” is not implied. Exposure to “Absolute Maximum Ratings” for extended periods may affect device reliability.

Recommended Operating Conditions

Symbol	Parameter	Min	Max	Unit
V_{IN}	Supply Input Voltage	2.5	13.2	V
V_{EN}	Enable Input Voltage	0	13.2	V
T_J	Operating Junction Temperature	-40	+125	°C

© Diodes Incorporated

AP2210-2.5 Electrical Characteristics (V_{IN} = 3.5V, I_{OUT} = 100µA, C_{IN} = 1.0µF, C_{OUT} = 2.2µF, V_{EN} ≥ 2.0V, T_J = +25°C, **Bold** typeface applies over -40°C ≤ T_J ≤ +125°C (Note 6), unless otherwise specified.)

Symbol	Parameter	Conditions	Min	Typ	Max	Unit
$\Delta V_{OUT}/V_{OUT}$	Output Voltage Accuracy	Variation from specified V_{OUT}	-1	—	1	%
			-2	—	**2**	
$\Delta V_{OUT}/\Delta T$	Output Voltage Temperature Coefficient (Note 7)	—	—	**120**	—	µV/°C
$(\Delta V_{OUT}/V_{OUT})/\Delta T$		—	—	**48**	—	ppm/°C
V_{RLINE}	Line Regulation	V_{IN} = 3.5V to 13.2V	—	1.5	4.5	mV
			—	—	**12**	
V_{RLOAD}	Load Regulation (Note 8)	I_{OUT} = 0.1mA to 300mA	—	1	6	mV
			—	—	**30**	
V_{DROP}	Dropout Voltage (Note 9)	I_{OUT} = 100µA	—	15	50	mV
			—	—	**70**	
		I_{OUT} = 50mA	—	110	150	
			—	—	**230**	
		I_{OUT} = 100mA	—	140	250	
			—	—	**300**	
		I_{OUT} = 150mA	—	165	275	
			—	—	**350**	
		I_{OUT} = 300mA	—	250	400	
			—	—	**500**	
I_{STD}	Standby Current	V_{EN} ≤ 0.4V (shutdown)	—	0.01	1	µA
		V_{EN} ≤ 0.18V (shutdown)	—	—	**5**	
I_{GND}	Ground Pin Current (Note 10)	V_{EN} ≥ 2.0V, I_{OUT} = 100µA	—	100	150	µA
			—	—	**180**	
		V_{EN} ≥ 2.0V, I_{OUT} = 50mA	—	350	600	
			—	—	**800**	
		V_{EN} ≥ 2.0V, I_{OUT} = 150mA	—	1.3	1.9	mA
			—	—	**2.5**	
		V_{EN} ≥ 2.0V, I_{OUT} = 300mA	—	4	10	
			—	—	**15**	
PSRR	Ripple Rejection	f = 100Hz, I_{OUT} = 100µA	—	75	—	dB
I_{LIMIT}	Current Limit	V_{OUT} = 0V	—	**450**	900	mA

© Diodes Incorporated

AP2210-2.5 Electrical Characteristics (Cont.) (V_{IN} = 3.5V, I_{OUT} = 100µA, C_{IN} = 1.0µF, C_{OUT} = 2.2µF, V_{EN} ≥ 2.0V, T_J = +25°C, **Bold** typeface applies over -40°C ≤ T_J ≤ +125°C (Note 6), unless otherwise specified.)

Symbol	Parameter	Conditions	Min	Typ	Max	Unit
e_{no}	Output Noise	I_{OUT} = 50mA, C_{OUT} = 2.2µF, 100pF from BYP to GND	—	260	—	$nV/\sqrt{Hz}$
V_{IL}	Enable Input Logic-low Voltage	Regulator shutdown	—	—	0.4	V
			—	—	**0.18**	
V_{IH}	Enable Input Logic-high Voltage	Regulator enabled	**2.0**	—	—	V
I_{IL}	Enable Input Logic-low Current	V_{IL} ≤ 0.4V	—	0.01	1	µA
		V_{IL} ≤ 0.18V	—	—	**2**	
I_{IH}	Enable Input Logic-high Current	V_{IL} ≥ 2.0V	—	5	20	µA
		V_{IL} ≥ 2.0V	—	—	**25**	

Notes:
6. Specifications in bold type are limited to -40°C ≤ T_J ≤ +125°C. Limits over temperature are guaranteed by design, but not tested in production.
7. Output voltage temperature coefficient is defined as the worst case voltage change divided by the total temperature range.
8. Regulation is measured at constant junction temperature using low duty cycle pulse testing. Parts are tested for load regulation in the load range from 0.1mA to 300mA. Changes in output voltage due to heating effects are covered by the thermal regulation specification.
9. Dropout voltage is defined as the input to output differential at which the output voltage drops 1% (T_J = +25°C) or 2% (-40°C ≤ T_J ≤ +125°C) below its nominal value measured at 1V differential.
10. Ground pin current is the regulator quiescent current plus pass transistor base current. The total current drawn from the supply is the sum of the load current plus the ground pin current.

© Diodes Incorporated

AP2210-2.8 Electrical Characteristics (V_{IN} = 3.8V, I_{OUT} = 100µA, C_{IN} = 1.0µF, C_{OUT} = 2.2µF, V_{EN} ≥ 2.0V, T_J = +25°C, **Bold** typeface applies over -40°C ≤ T_J ≤ +125°C (Note 6), unless otherwise specified.)

Symbol	Parameter	Conditions	Min	Typ	Max	Unit
$\Delta V_{OUT}/V_{OUT}$	Output Voltage Accuracy	Variation from specified V_{OUT}	-1	—	1	%
			-2	—	**2**	
$\Delta V_{OUT}/\Delta T$	Output Voltage Temperature Coefficient (Note 7)	—	—	**120**	—	µV/°C
$(\Delta V_{OUT}/V_{OUT})/\Delta T$		—	—	**42.8**	—	ppm/°C
V_{RLINE}	Line Regulation	V_{IN} = 3.8V to 13.2V	—	1.5	4.5	mV
			—	—	**12**	
V_{RLOAD}	Load Regulation (Note 8)	I_{OUT} = 0.1mA to 300mA	—	1	6	mV
			—	—	**30**	
V_{DROP}	Dropout Voltage (Note 9)	I_{OUT} = 100µA	—	15	50	mV
			—	—	**70**	
		I_{OUT} = 50mA	—	110	150	
			—	—	**230**	
		I_{OUT} = 100mA	—	140	250	
			—	—	**300**	
		I_{OUT} = 150mA	—	165	275	
			—	—	**350**	
		I_{OUT} = 300mA	—	250	400	
			—	—	**500**	
I_{STD}	Standby Current	V_{EN} ≤ 0.4V (shutdown)	—	0.01	1	µA
		V_{EN} ≤ 0.18V (shutdown)	—	—	**5**	
I_{GND}	Ground Pin Current (Note 10)	V_{EN} ≥ 2.0V, I_{OUT} = 100µA	—	100	150	µA
			—	—	**180**	
		V_{EN} ≥ 2.0V, I_{OUT} = 50mA	—	350	600	
			—	—	**800**	
		V_{EN} ≥ 2.0V, I_{OUT} = 150mA	—	1.3	1.9	mA
			—	—	**2.5**	
		V_{EN} ≥ 2.0V, I_{OUT} = 300mA	—	4	10	
			—	—	**15**	
PSRR	Ripple Rejection	f = 100Hz, I_{OUT} = 100µA	—	75	—	dB
I_{LIMIT}	Current Limit	V_{OUT} = 0V	—	**450**	900	mA

© Diodes Incorporated

AP2210-2.8 Electrical Characteristics (Cont.) (V_{IN} = 3.8V, I_{OUT} = 100μA, C_{IN} = 1.0μF, C_{OUT} = 2.2μF, V_{EN} ≥ 2.0V, T_J = +25°C, **Bold** typeface applies over -40°C ≤ T_J ≤ +125°C (Note 6), unless otherwise specified.)

Symbol	Parameter	Conditions	Min	Typ	Max	Unit
e_{no}	Output Noise	I_{OUT} = 50mA, C_{OUT} = 2.2μF, 100pF from BYP to GND	—	260	—	$nV/\sqrt{Hz}$
V_{IL}	Enable Input Logic-low Voltage	Regulator shutdown	—	—	0.4	V
			—	—	**0.18**	
V_{IH}	Enable Input Logic-high Voltage	Regulator enabled	**2.0**	—	—	V
I_{IL}	Enable Input Logic-low Current	V_{IL} ≤ 0.4V	—	0.01	1	μA
		V_{IL} ≤ 0.18V	—	—	**2**	
I_{IH}	Enable Input Logic-high Current	V_{IL} ≥ 2.0V	—	5	20	μA
		V_{IL} ≥ 2.0V	—	—	**25**	

Notes:
6. Specifications in bold type are limited to -40°C ≤ T_J ≤ +125°C. Limits over temperature are guaranteed by design, but not tested in production.
7. Output voltage temperature coefficient is defined as the worst case voltage change divided by the total temperature range.
8. Regulation is measured at constant junction temperature using low duty cycle pulse testing. Parts are tested for load regulation in the load range from 0.1mA to 300mA. Changes in output voltage due to heating effects are covered by the thermal regulation specification.
9. Dropout voltage is defined as the input to output differential at which the output voltage drops 1% (T_J = +25°C) or 2% (-40°C ≤ T_J ≤ +125°C) below its nominal value measured at 1V differential.
10. Ground pin current is the regulator quiescent current plus pass transistor base current. The total current drawn from the supply is the sum of the load current plus the ground pin current.

© Diodes Incorporated

AP2210-3.0 Electrical Characteristics (V_{IN} = 4V, I_{OUT} = 100µA, C_{IN} = 1.0µF, C_{OUT} = 2.2µF, V_{EN} ≥ 2.0V, T_J = +25°C, **Bold** typeface applies over -40°C ≤ T_J ≤ +125°C (Note 6), unless otherwise specified.)

Symbol	Parameter	Conditions	Min	Typ	Max	Unit
$\Delta V_{OUT}/V_{OUT}$	Output Voltage Accuracy	Variation from specified V_{OUT}	-1	—	1	%
			-2	—	**2**	
$\Delta V_{OUT}/\Delta T$	Output Voltage Temperature Coefficient (Note 7)	—	—	**120**	—	µV/°C
$(\Delta V_{OUT}/V_{OUT})/\Delta T$		—	—	**40**	—	ppm/°C
V_{RLINE}	Line Regulation	V_{IN} = 4V to 13.2V	—	1.5	4.5	mV
			—	—	**12**	
V_{RLOAD}	Load Regulation (Note 8)	I_{OUT} = 0.1mA to 300mA	—	1	6	mV
			—	—	**30**	
V_{DROP}	Dropout Voltage (Note 9)	I_{OUT} = 100µA	—	15	50	mV
			—	—	**70**	
		I_{OUT} = 50mA	—	110	150	
			—	—	**230**	
		I_{OUT} = 100mA	—	140	250	
			—	—	**300**	
		I_{OUT} = 150mA	—	165	275	
			—	—	**350**	
		I_{OUT} = 300mA	—	250	400	
			—	—	**500**	
I_{STD}	Standby Current	V_{EN} ≤ 0.4V (shutdown)	—	0.01	1	µA
		V_{EN} ≤ 0.18V (shutdown)	—	—	**5**	
I_{GND}	Ground Pin Current (Note 10)	V_{EN} ≥ 2.0V, I_{OUT} = 100µA	—	100	150	µA
			—	—	**180**	
		V_{EN} ≥ 2.0V, I_{OUT} = 50mA	—	350	600	
			—	—	**800**	
		V_{EN} ≥ 2.0V, I_{OUT} = 150mA	—	1.3	1.9	mA
			—	—	**2.5**	
		V_{EN} ≥ 2.0V, I_{OUT} = 300mA	—	4	10	
			—	—	**15**	
PSRR	Ripple Rejection	f = 100Hz, I_{OUT} = 100µA	—	75	—	dB
I_{LIMIT}	Current Limit	V_{OUT} = 0V	—	**450**	900	mA

© Diodes Incorporated

AP2210-3.0 Electrical Characteristics (Cont.) (V_{IN} = 4V, I_{OUT} = 100µA, C_{IN} = 1.0µF, C_{OUT} = 2.2µF, V_{EN} ≥ 2.0V, T_J = +25°C, **Bold** typeface applies over -40°C ≤ T_J ≤ +125°C (Note 6), unless otherwise specified.)

Symbol	Parameter	Conditions	Min	Typ	Max	Unit
e_{no}	Output Noise	I_{OUT} = 50mA, C_{OUT} = 2.2µF, 100pF from BYP to GND	—	260	—	$nV/\sqrt{Hz}$
V_{IL}	Enable Input Logic-low Voltage	Regulator shutdown	—	—	0.4	V
			—	—	**0.18**	
V_{IH}	Enable Input Logic-high Voltage	Regulator enabled	**2.0**	—	—	V
I_{IL}	Enable Input Logic-low Current	V_{IL} ≤ 0.4V	—	0.01	1	µA
		V_{IL} ≤ 0.18V	—	—	**2**	
I_{IH}	Enable Input Logic-high Current	V_{IL} ≥ 2.0V	—	5	20	µA
		V_{IL} ≥ 2.0V	—	—	**25**	

Notes:
6. Specifications in bold type are limited to -40°C ≤ T_J ≤ +125°C. Limits over temperature are guaranteed by design, but not tested in production.
7. Output voltage temperature coefficient is defined as the worst case voltage change divided by the total temperature range.
8. Regulation is measured at constant junction temperature using low duty cycle pulse testing. Parts are tested for load regulation in the load range from 0.1mA to 300mA. Changes in output voltage due to heating effects are covered by the thermal regulation specification.
9. Dropout voltage is defined as the input to output differential at which the output voltage drops 1% (T_J = +25°C) or 2% (-40°C ≤ T_J ≤ +125°C) below its nominal value measured at 1V differential.
10. Ground pin current is the regulator quiescent current plus pass transistor base current. The total current drawn from the supply is the sum of the load current plus the ground pin current.

© Diodes Incorporated

AP2210-3.3 Electrical Characteristics (V_{IN} = 4.3V, I_{OUT} = 100µA, C_{IN} = 1.0µF, C_{OUT} = 2.2µF, V_{EN} ≥ 2.0V, T_J = +25°C, **Bold** typeface applies over -40°C ≤ T_J ≤ +125°C (Note 6), unless otherwise specified.)

Symbol	Parameter	Conditions	Min	Typ	Max	Unit
$\Delta V_{OUT}/V_{OUT}$	Output Voltage Accuracy	Variation from specified V_{OUT}	-1	—	1	%
			-2	—	**2**	
$\Delta V_{OUT}/\Delta T$	Output Voltage Temperature Coefficient (Note 7)	—	—	**120**	—	µV/°C
$(\Delta V_{OUT}/V_{OUT})/\Delta T$		—	—	**36.3**	—	ppm/°C
V_{RLINE}	Line Regulation	V_{IN} = 4.3V to 13.2V	—	1.5	4.5	mV
			—	—	**12**	
V_{RLOAD}	Load Regulation (Note 8)	I_{OUT} = 0.1mA to 300mA	—	1	6	mV
			—	—	**30**	
V_{DROP}	Dropout Voltage (Note 9)	I_{OUT} = 100µA	—	15	50	mV
			—	—	**70**	
		I_{OUT} = 50mA	—	110	150	
			—	—	**230**	
		I_{OUT} = 100mA	—	140	250	
			—	—	**300**	
		I_{OUT} = 150mA	—	165	275	
			—	—	**350**	
		I_{OUT} = 300mA	—	250	400	
			—	—	**500**	
I_{STD}	Standby Current	V_{EN} ≤ 0.4V (shutdown)	—	0.01	1	µA
		V_{EN} ≤ 0.18V (shutdown)	—	—	**5**	
I_{GND}	Ground Pin Current (Note 10)	V_{EN} ≥ 2.0V, I_{OUT} = 100µA	—	100	150	µA
			—	—	**180**	
		V_{EN} ≥ 2.0V, I_{OUT} = 50mA	—	350	600	
			—	—	**800**	
		V_{EN} ≥ 2.0V, I_{OUT} = 150mA	—	1.3	1.9	mA
			—	—	**2.5**	
		V_{EN} ≥ 2.0V, I_{OUT} = 300mA	—	4	10	
			—	—	**15**	
PSRR	Ripple Rejection	f = 100Hz, I_{OUT} = 100µA	—	75	—	dB
I_{LIMIT}	Current Limit	V_{OUT} = 0V	—	**450**	900	mA

© Diodes Incorporated

AP2210-3.3 Electrical Characteristics (Cont.) (V_{IN} = 4.3V, I_{OUT} = 100µA, C_{IN} = 1.0µF, C_{OUT} = 2.2µF, V_{EN} ≥ 2.0V, T_J = +25°C, **Bold** typeface applies over -40°C ≤ T_J ≤ +125°C (Note 6), unless otherwise specified.)

Symbol	Parameter	Conditions	Min	Typ	Max	Unit
e_{no}	Output Noise	I_{OUT} = 50mA, C_{OUT} = 2.2µF, 100pF from BYP to GND	—	260	—	$nV/\sqrt{Hz}$
V_{IL}	Enable Input Logic-low Voltage	Regulator shutdown	—	—	0.4	V
			—	—	**0.18**	
V_{IH}	Enable Input Logic-high Voltage	Regulator enabled	**2.0**	—	—	V
I_{IL}	Enable Input Logic-low Current	V_{IL} ≤ 0.4V	—	0.01	1	µA
		V_{IL} ≤ 0.18V	—	—	**2**	
I_{IH}	Enable Input Logic-high Current	V_{IL} ≥ 2.0V	—	5	20	µA
		V_{IL} ≥ 2.0V	—	—	**25**	

Notes:
6. Specifications in bold type are limited to -40°C ≤ T_J ≤ +125°C. Limits over temperature are guaranteed by design, but not tested in production.
7. Output voltage temperature coefficient is defined as the worst case voltage change divided by the total temperature range.
8. Regulation is measured at constant junction temperature using low duty cycle pulse testing. Parts are tested for load regulation in the load range from 0.1mA to 300mA. Changes in output voltage due to heating effects are covered by the thermal regulation specification.
9. Dropout voltage is defined as the input to output differential at which the output voltage drops 1% (T_J = +25°C) or 2% (-40°C ≤ T_J ≤ +125°C) below its nominal value measured at 1V differential.
10. Ground pin current is the regulator quiescent current plus pass transistor base current. The total current drawn from the supply is the sum of the load current plus the ground pin current.

© Diodes Incorporated

AP2210-3.6 Electrical Characteristics (V_{IN} = 4.6V, I_{OUT} = 100µA, C_{IN} = 1.0µF, C_{OUT} = 2.2µF, V_{EN} ≥ 2.0V, T_J = +25°C, **Bold** typeface applies over -40°C ≤ T_J ≤ +125°C (Note 6), unless otherwise specified.)

Symbol	Parameter	Conditions	Min	Typ	Max	Unit
$\Delta V_{OUT}/V_{OUT}$	Output Voltage Accuracy	Variation from specified V_{OUT}	-1	—	1	%
			-2	—	**2**	
$\Delta V_{OUT}/\Delta T$	Output Voltage Temperature Coefficient (Note 7)	—	—	**120**	—	µV/°C
$(\Delta V_{OUT}/V_{OUT})/\Delta T$		—	—	**48**	—	ppm/°C
V_{RLINE}	Line Regulation	V_{IN} = 4.6V to 13.2V	—	1.5	4.5	mV
			—	—	**12**	
V_{RLOAD}	Load Regulation (Note 8)	I_{OUT} = 0.1mA to 300mA	—	1	6	mV
			—	—	**30**	
V_{DROP}	Dropout Voltage (Note 9)	I_{OUT} = 100µA	—	15	50	mV
			—	—	**70**	
		I_{OUT} = 50mA	—	110	150	
			—	—	**230**	
		I_{OUT} = 100mA	—	140	250	
			—	—	**300**	
		I_{OUT} = 150mA	—	165	275	
			—	—	**350**	
		I_{OUT} = 300mA	—	250	400	
			—	—	**500**	
I_{STD}	Standby Current	V_{EN} ≤ 0.4V (shutdown)	—	0.01	1	µA
		V_{EN} ≤ 0.18V (shutdown)	—	—	**5**	
I_{GND}	Ground Pin Current (Note 10)	V_{EN} ≥ 2.0V, I_{OUT} = 100µA	—	100	150	µA
			—	—	**180**	
		V_{EN} ≥ 2.0V, I_{OUT} = 50mA	—	350	600	
			—	—	**800**	
		V_{EN} ≥ 2.0V, I_{OUT} = 150mA	—	1.3	1.9	mA
			—	—	**2.5**	
		V_{EN} ≥ 2.0V, I_{OUT} = 300mA	—	4	10	
			—	—	**15**	
PSRR	Ripple Rejection	f = 100Hz, I_{OUT} = 100µA	—	75	—	dB
I_{LIMIT}	Current Limit	V_{OUT} = 0V	—	**450**	900	mA

© Diodes Incorporated

AP2210-3.6 Electrical Characteristics (Cont.) (V_{IN} = 4.6V, I_{OUT} = 100µA, C_{IN} = 1.0µF, C_{OUT} = 2.2µF, V_{EN} ≥ 2.0V, T_J = +25°C, **Bold** typeface applies over -40°C ≤ T_J ≤ +125°C (Note 6), unless otherwise specified.)

Symbol	Parameter	Conditions	Min	Typ	Max	Unit
e_{no}	Output Noise	I_{OUT} = 50mA, C_{OUT} = 2.2µF, 100pF from BYP to GND	—	260	—	$nV/\sqrt{Hz}$
V_{IL}	Enable Input Logic-low Voltage	Regulator shutdown	—	—	0.4	V
			—	—	**0.18**	
V_{IH}	Enable Input Logic-high Voltage	Regulator enabled	**2.0**	—	—	V
I_{IL}	Enable Input Logic-low Current	V_{IL} ≤ 0.4V	—	0.01	1	µA
		V_{IL} ≤ 0.18V	—	—	**2**	
I_{IH}	Enable Input Logic-high Current	V_{IL} ≥ 2.0V	—	5	20	µA
		V_{IL} ≥ 2.0V	—	—	**25**	

Notes:
6. Specifications in bold type are limited to -40°C ≤ T_J ≤ +125°C. Limits over temperature are guaranteed by design, but not tested in production.
7. Output voltage temperature coefficient is defined as the worst case voltage change divided by the total temperature range.
8. Regulation is measured at constant junction temperature using low duty cycle pulse testing. Parts are tested for load regulation in the load range from 0.1mA to 300mA. Changes in output voltage due to heating effects are covered by the thermal regulation specification.
9. Dropout voltage is defined as the input to output differential at which the output voltage drops 1% (T_J = +25°C) or 2% (-40°C ≤ T_J ≤ +125°C) below its nominal value measured at 1V differential.
10. Ground pin current is the regulator quiescent current plus pass transistor base current. The total current drawn from the supply is the sum of the load current plus the ground pin current.

© Diodes Incorporated

AP2210-4.0 Electrical Characteristics (V_{IN} = 5.0V, I_{OUT} = 100µA, C_{IN} = 1.0µF, C_{OUT} = 2.2µF, V_{EN} ≥ 2.0V, T_J = +25°C, **Bold** typeface applies over -40°C ≤ T_J ≤ +125°C (Note 6), unless otherwise specified.)

Symbol	Parameter	Conditions	Min	Typ	Max	Unit
$\Delta V_{OUT}/V_{OUT}$	Output Voltage Accuracy	Variation from specified V_{OUT}	-1	—	1	%
			-2	—	**2**	
$\Delta V_{OUT}/\Delta T$	Output Voltage Temperature Coefficient (Note 7)	—	—	**120**	—	µV/°C
$(\Delta V_{OUT}/V_{OUT})/\Delta T$		—	—	**48**	—	ppm/°C
V_{RLINE}	Line Regulation	V_{IN} = 5.0V to 13.2V	—	1.5	4.5	mV
			—	—	**12**	
V_{RLOAD}	Load Regulation (Note 8)	I_{OUT} = 0.1mA to 300mA	—	1	6	mV
			—	—	**30**	
V_{DROP}	Dropout Voltage (Note 9)	I_{OUT} = 100µA	—	15	50	mV
			—	—	**70**	
		I_{OUT} = 50mA	—	110	150	
			—	—	**230**	
		I_{OUT} = 100mA	—	140	250	
			—	—	**300**	
		I_{OUT} = 150mA	—	165	275	
			—	—	**350**	
		I_{OUT} = 300mA	—	250	400	
			—	—	**500**	
I_{STD}	Standby Current	V_{EN} ≤ 0.4V (shutdown)	—	0.01	1	µA
		V_{EN} ≤ 0.18V (shutdown)	—	—	**5**	
I_{GND}	Ground Pin Current (Note 10)	V_{EN} ≥ 2.0V, I_{OUT} = 100µA	—	100	150	µA
			—	—	**180**	
		V_{EN} ≥ 2.0V, I_{OUT} = 50mA	—	350	600	
			—	—	**800**	
		V_{EN} ≥ 2.0V, I_{OUT} = 150mA	—	1.3	1.9	mA
			—	—	**2.5**	
		V_{EN} ≥ 2.0V, I_{OUT} = 300mA	—	4	10	
			—	—	**15**	
PSRR	Ripple Rejection	f = 100Hz, I_{OUT} = 100µA	—	75	—	dB
I_{LIMIT}	Current Limit	V_{OUT} = 0V	—	**450**	900	mA

© Diodes Incorporated

AP2210-4.0 Electrical Characteristics (Cont.) (V_{IN} = 5.0V, I_{OUT} = 100µA, C_{IN} = 1.0µF, C_{OUT} = 2.2µF, V_{EN} ≥ 2.0V, T_J = +25°C, **Bold** typeface applies over -40°C ≤ T_J ≤ +125°C (Note 6), unless otherwise specified.)

Symbol	Parameter	Conditions	Min	Typ	Max	Unit
e_{no}	Output Noise	I_{OUT} = 50mA, C_{OUT} = 2.2µF, 100pF from BYP to GND	—	260	—	$nV/\sqrt{Hz}$
V_{IL}	Enable Input Logic-low Voltage	Regulator shutdown	—	—	0.4	V
			—	—	**0.18**	
V_{IH}	Enable Input Logic-high Voltage	Regulator enabled	**2.0**	—	—	V
I_{IL}	Enable Input Logic-low Current	V_{IL} ≤ 0.4V	—	0.01	1	µA
		V_{IL} ≤ 0.18V	—	—	**2**	
I_{IH}	Enable Input Logic-high Current	V_{IL} ≥ 2.0V	—	5	20	µA
		V_{IL} ≥ 2.0V	—	—	**25**	

Notes:
6. Specifications in bold type are limited to -40°C ≤ T_J ≤ +125°C. Limits over temperature are guaranteed by design, but not tested in production.
7. Output voltage temperature coefficient is defined as the worst case voltage change divided by the total temperature range.
8. Regulation is measured at constant junction temperature using low duty cycle pulse testing. Parts are tested for load regulation in the load range from 0.1mA to 300mA. Changes in output voltage due to heating effects are covered by the thermal regulation specification.
9. Dropout voltage is defined as the input to output differential at which the output voltage drops 1% (T_J = +25°C) or 2% (-40°C ≤ T_J ≤ +125°C) below its nominal value measured at 1V differential.
10. Ground pin current is the regulator quiescent current plus pass transistor base current. The total current drawn from the supply is the sum of the load current plus the ground pin current.

© Diodes Incorporated

AP2210-5.0 Electrical Characteristics (V_{IN} = 6.0V, I_{OUT} = 100µA, C_{IN} = 1.0µF, C_{OUT} = 2.2µF, V_{EN} ≥ 2.0V, T_J = +25°C, **Bold** typeface applies over -40°C ≤ T_J ≤ +125°C (Note 6), unless otherwise specified.)

Symbol	Parameter	Conditions	Min	Typ	Max	Unit
$\Delta V_{OUT}/V_{OUT}$	Output Voltage Accuracy	Variation from specified V_{OUT}	-1	—	1	%
			-2	—	**2**	
$\Delta V_{OUT}/\Delta T$	Output Voltage Temperature Coefficient (Note 7)	—	—	**120**	—	µV/°C
$(\Delta V_{OUT}/V_{OUT})/\Delta T$		—	—	**48**	—	ppm/°C
V_{RLINE}	Line Regulation	V_{IN} = 6.0V to 13.2V	—	1.5	4.5	mV
			—	—	**12**	
V_{RLOAD}	Load Regulation (Note 8)	I_{OUT} = 0.1mA to 300mA	—	1	6	mV
			—	—	**30**	
V_{DROP}	Dropout Voltage (Note 9)	I_{OUT} = 100µA	—	15	50	mV
			—	—	**70**	
		I_{OUT} = 50mA	—	110	150	
			—	—	**230**	
		I_{OUT} = 100mA	—	140	250	
			—	—	**300**	
		I_{OUT} = 150mA	—	165	275	
			—	—	**350**	
		I_{OUT} = 300mA	—	250	400	
			—	—	**500**	
I_{STD}	Standby Current	V_{EN} ≤ 0.4V (shutdown)	—	0.01	1	µA
		V_{EN} ≤ 0.18V (shutdown)	—	—	**5**	
I_{GND}	Ground Pin Current (Note 10)	V_{EN} ≥ 2.0V, I_{OUT} = 100µA	—	100	150	µA
			—	—	**180**	
		V_{EN} ≥ 2.0V, I_{OUT} = 50mA	—	350	600	
			—	—	**800**	
		V_{EN} ≥ 2.0V, I_{OUT} = 150mA	—	1.3	1.9	mA
			—	—	**2.5**	
		V_{EN} ≥ 2.0V, I_{OUT} = 300mA	—	4	10	
			—	—	**15**	
PSRR	Ripple Rejection	f = 100Hz, I_{OUT} = 100µA	—	75	—	dB
I_{LIMIT}	Current Limit	V_{OUT} = 0V	—	**450**	900	mA

© Diodes Incorporated

AP2210-5.0 Electrical Characteristics (Cont.) (V_{IN} = 6.0V, I_{OUT} = 100µA, C_{IN} = 1.0µF, C_{OUT} = 2.2µF, V_{EN} ≥ 2.0V, T_J = +25°C, **Bold** typeface applies over -40°C ≤ T_J ≤ +125°C (Note 6), unless otherwise specified.)

Symbol	Parameter	Conditions	Min	Typ	Max	Unit
e_{no}	Output Noise	I_{OUT} = 50mA, C_{OUT} = 2.2µF, 100pF from BYP to GND	—	260	—	$nV/\sqrt{Hz}$
V_{IL}	Enable Input Logic-low Voltage	Regulator shutdown	—	—	0.4	V
			—	—	**0.18**	
V_{IH}	Enable Input Logic-high Voltage	Regulator enabled	**2.0**	—	—	V
I_{IL}	Enable Input Logic-low Current	V_{IL} ≤ 0.4V	—	0.01	1	µA
		V_{IL} ≤ 0.18V	—	—	**2**	
I_{IH}	Enable Input Logic-high Current	V_{IL} ≥ 2.0V	—	5	20	µA
		V_{IL} ≥ 2.0V	—	—	**25**	

Notes:
6. Specifications in bold type are limited to -40°C ≤ T_J ≤ +125°C. Limits over temperature are guaranteed by design, but not tested in production.
7. Output voltage temperature coefficient is defined as the worst case voltage change divided by the total temperature range.
8. Regulation is measured at constant junction temperature using low duty cycle pulse testing. Parts are tested for load regulation in the load range from 0.1mA to 300mA. Changes in output voltage due to heating effects are covered by the thermal regulation specification.
9. Dropout voltage is defined as the input to output differential at which the output voltage drops 1% (T_J = +25°C) or 2% (-40°C ≤ T_J ≤ +125°C) below its nominal value measured at 1V differential.
10. Ground pin current is the regulator quiescent current plus pass transistor base current. The total current drawn from the supply is the sum of the load current plus the ground pin current.

© Diodes Incorporated

AP2210-ADJ Electrical Characteristics (V_{IN} = V_{OUT}+1V, I_{OUT} = 100µA, C_{IN} = 1.0µF, C_{OUT} = 2.2µF, V_{EN} ≥ 2.0V, T_J = +25°C, **Bold** typeface applies over -40°C ≤ T_J ≤ +125°C (Note 6), unless otherwise specified.)

Symbol	Parameter	Conditions	Min	Typ	Max	Unit
$\Delta V_{OUT}/V_{OUT}$	Output Voltage Accuracy	Variation from specified V_{OUT}	-1	—	1	%
			-2	—	**2**	
$\Delta V_{OUT}/\Delta T$	Output Voltage Temperature Coefficient (Note 7)	—	—	**120**	—	µV/°C
$(\Delta V_{OUT}/V_{OUT})/\Delta T$		—	—	**48**	—	ppm/°C
V_{RLINE}	Line Regulation	V_{IN} = V_{OUT}+1V to 13.2V	—	1.5	4.5	mV
			—	—	**12**	
V_{RLOAD}	Load Regulation (Note 8)	I_{OUT} = 0.1mA to 300mA	—	1	6	mV
			—	—	**30**	
I_{STD}	Standby Current	V_{EN} ≤ 0.4V (shutdown)	—	0.01	1	µA
		V_{EN} ≤ 0.18V (shutdown)	—	—	**5**	
I_{GND}	Ground Pin Current (Note 10)	V_{EN} ≥ 2.0V, I_{OUT} = 100µA	—	100	150	µA
			—	—	**180**	
		V_{EN} ≥ 2.0V, I_{OUT} = 50mA	—	350	600	
			—	—	**800**	
		V_{EN} ≥ 2.0V, I_{OUT} = 150mA	—	1.3	1.9	mA
			—	—	**2.5**	
		V_{EN} ≥ 2.0V, I_{OUT} = 300mA	—	4	10	
			—	—	**15**	
PSRR	Ripple Rejection	f = 100Hz, I_{OUT} = 100µA	—	75	—	dB
I_{LIMIT}	Current Limit	V_{OUT} = 0V	—	**450**	900	mA
e_{no}	Output Noise	I_{OUT} = 50mA, C_{OUT} = 2.2µF, 100pF from BYP to GND	—	260	—	$nV/\sqrt{Hz}$
V_{IL}	Enable Input Logic-low Voltage	Regulator shutdown	—	—	0.4	V
			—	—	**0.18**	
V_{IH}	Enable Input Logic-high Voltage	Regulator enabled	**2.0**	—	—	V
I_{IL}	Enable Input Logic-low Current	V_{IL} ≤ 0.4V	—	0.01	1	µA
		V_{IL} ≤ 0.18V	—	—	**2**	
I_{IH}	Enable Input Logic-high Current	V_{IL} ≥ 2.0V	—	5	20	µA
		V_{IL} ≥ 2.0V	—	—	**25**	

Notes:
6. Specifications in bold type are limited to -40°C ≤ T_J ≤ +125°C. Limits over temperature are guaranteed by design, but not tested in production.
7. Output voltage temperature coefficient is defined as the worst case voltage change divided by the total temperature range.
8. Regulation is measured at constant junction temperature using low duty cycle pulse testing. Parts are tested for load regulation in the load range from 0.1mA to 300mA. Changes in output voltage due to heating effects are covered by the thermal regulation specification.
9. Dropout voltage is defined as the input to output differential at which the output voltage drops 1% (T_J = +25°C) or 2% (-40°C ≤ T_J ≤ +125°C) below its nominal value measured at 1V differential.
10. Ground pin current is the regulator quiescent current plus pass transistor base current. The total current drawn from the supply is the sum of the load current plus the ground pin current.

© Diodes Incorporated

Performance Characteristics

Output Voltage vs. Junction Temperature

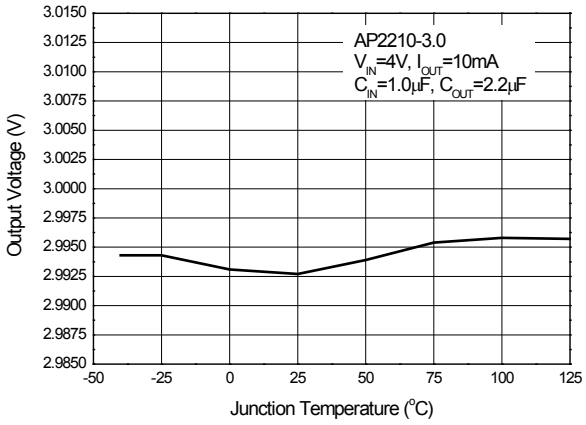

Dropout Voltage vs. Junction Temperature

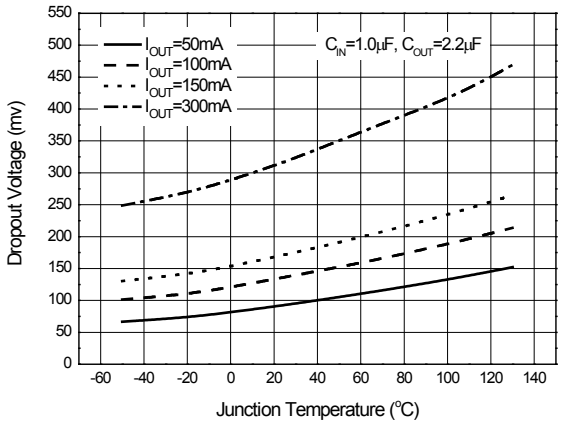

Ground Pin Current vs. Output Current

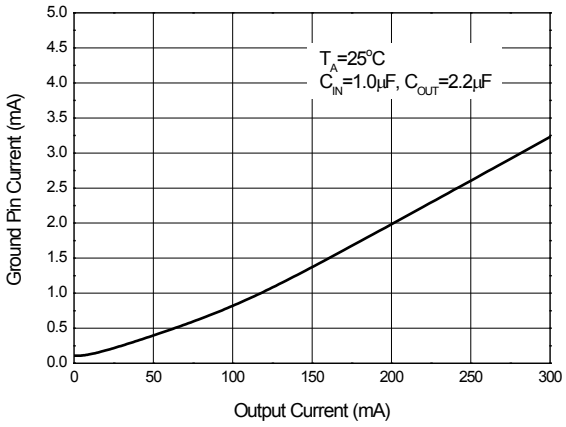

Ground Pin Current vs. Junction Temperature

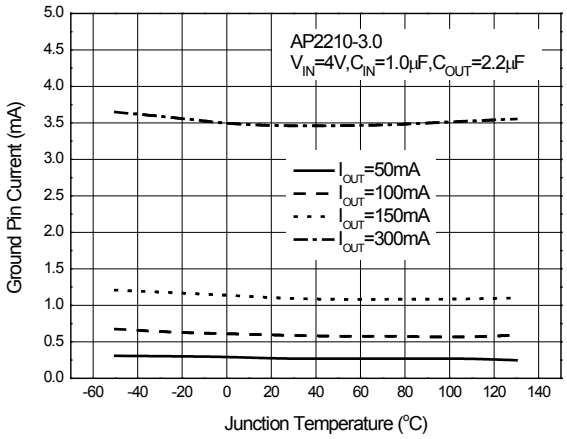

Enable Current vs. Junction Temperature

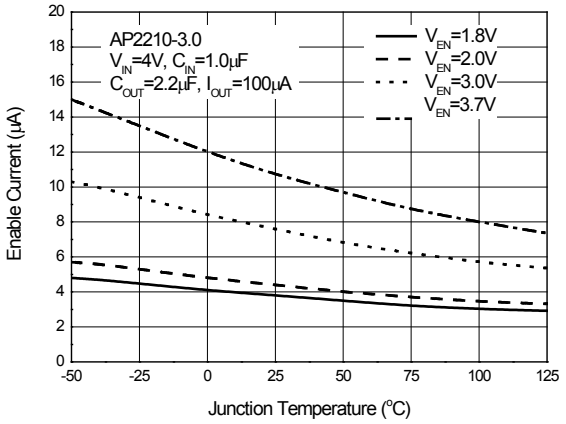

Enable Voltage vs. Junction Temperature

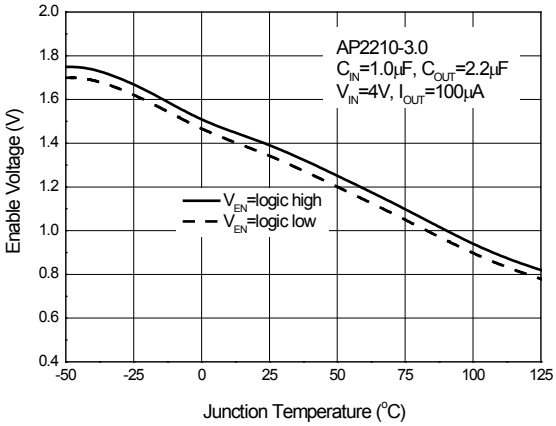

© Diodes Incorporated

Performance Characteristics (Cont.)

Output Noise vs. Frequency

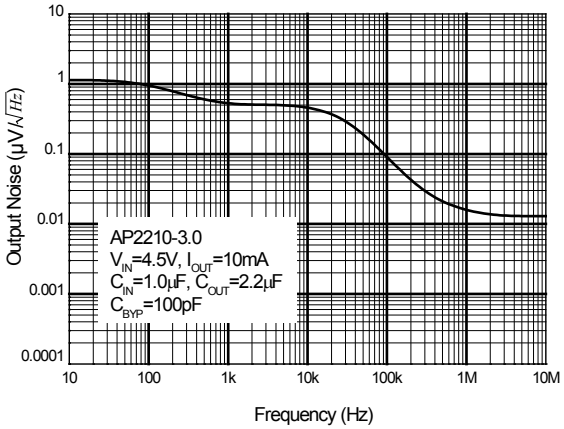

Line Transient
(Conditions: V_{IN} =4 to 5V, V_{EN} =2V, I_{OUT} = 1mA, C_{OUT} = 2.2μF)

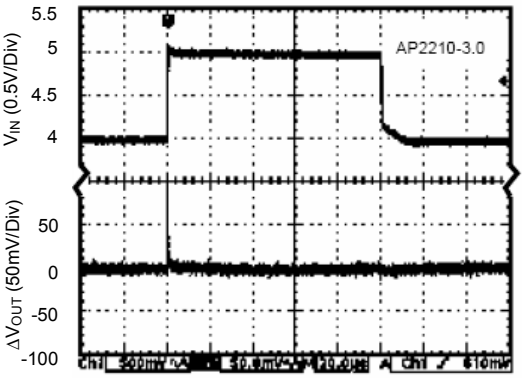

Load Transient
(Conditions: V_{IN} = 4V, V_{EN} = 2V, I_{OUT} = 10mA to 300mA, C_{IN} = 1.0μF, C_{OUT} = 2.2μF)

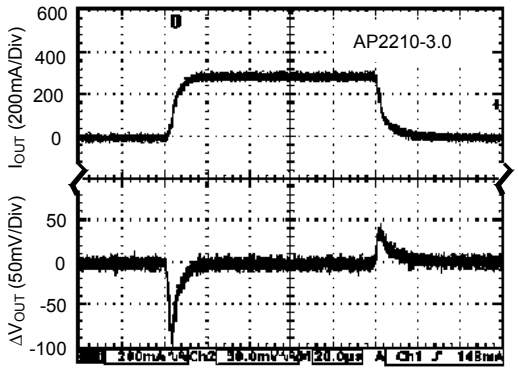

V_{EN} vs. V_{OUT}
(Conditions: V_{EN} = 0 to 2V, V_{IN} = 4V, I_{OUT} = 30mA, C_{IN} = 1.0μF, C_{OUT} = 2.2μF)

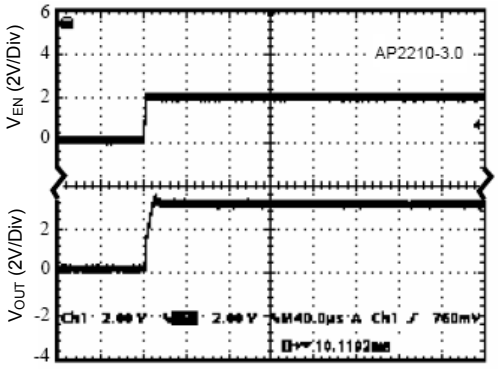

PSRR vs. Frequency

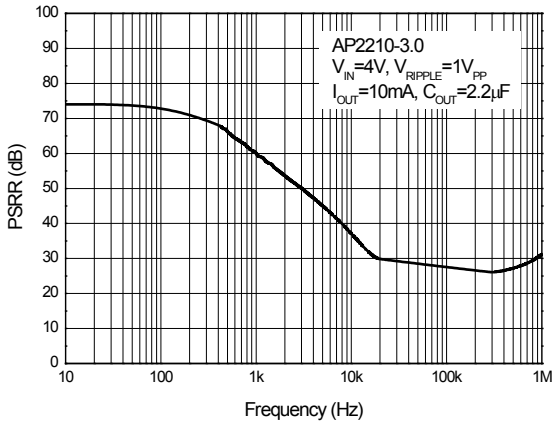

Power Dissipation vs. Ambient Temperature

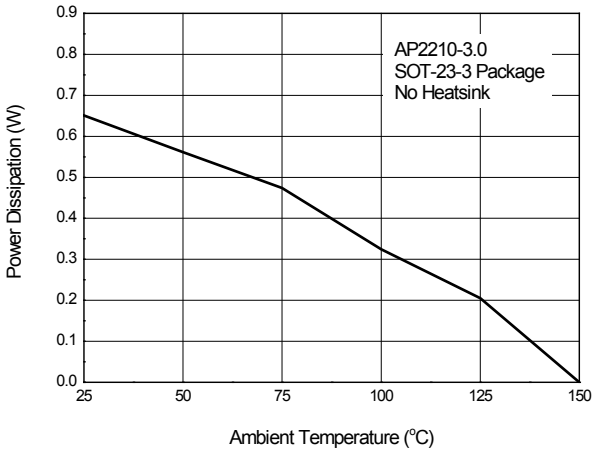

© Diodes Incorporated

Performance Characteristics (Cont.)

Power Dissipation vs. Ambient Temperature

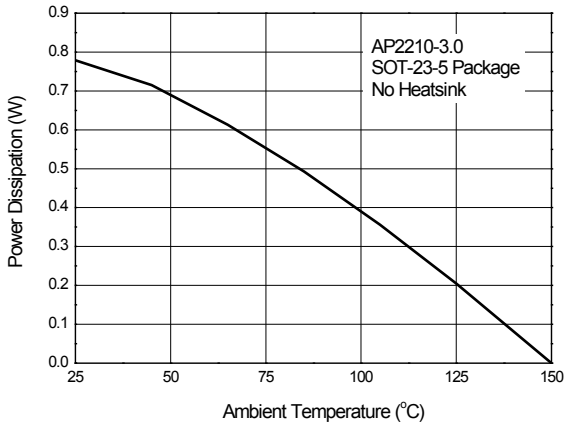

ESR vs. Output Current

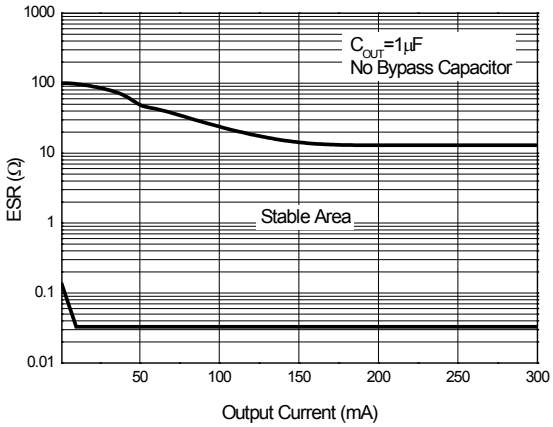

ESR vs. Output Current

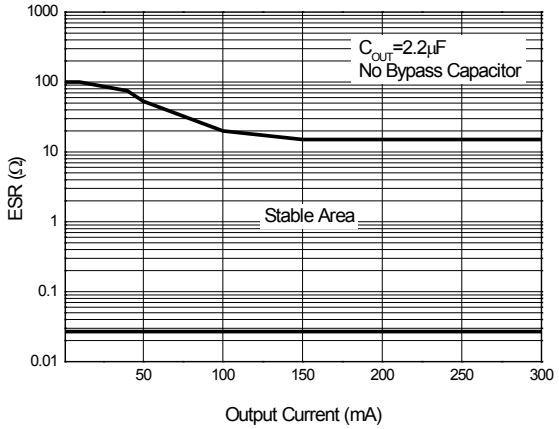

ESR vs. Output Current

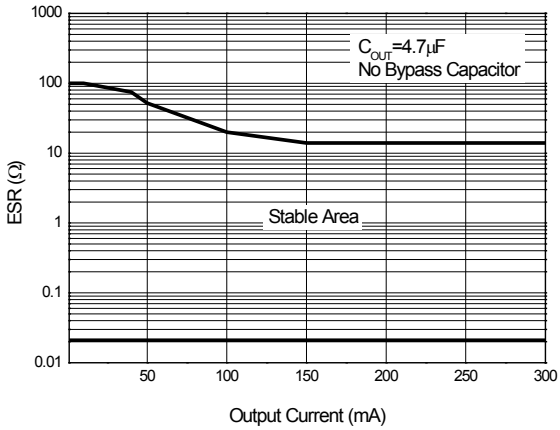

© Diodes Incorporated

Application Information

Input Capacitor

A 1μF minimum capacitor is recommended to be placed between V_{IN} and GND.

Output Capacitor

An output capacitor is required to prevent oscillation. A 1.0μF minimum is recommended when C_{BYP} is unused. A 2.2μF minimum is recommended when C_{BYP} is 100pF. The output capacitor may be increased to improve transient response.

Noise Bypass Capacitor

A bypass capacitor is connected to the internal voltage reference. A small capacitor connected from BYP to GND makes this reference quiet, resulting in a significant reduction in output noise, but the ESR stable area will be narrowed. In order to keep the output stability, it is recommended to use the bypass capacitor no more than 100pF.

The start-up speed of the AP2210 is inversely proportional to the value of the reference bypass capacitor. In some cases, if output noise is not a major concern and rapid turn-on is necessary, omit C_{BYP} and leave BYP open.

Power Dissipation

Thermal shutdown may take place if the maximum power dissipation is exceeded in application. Under all possible operating conditions, the junction temperature must be within the range specified under absolute maximum ratings to avoid thermal shutdown.

To determine if the power dissipated in the regulator reaches the maximum power dissipation (see Figure Power Dissipation vs. Ambient Temperature and Figure ESR vs. Output Current in Page 22), use:

$$T_J = P_D * \theta_{JA} + T_A$$

$$P_D = (V_{IN}-V_{OUT})*I_{OUT}+V_{IN}*I_{GND}$$

Where: $T_J \le T_{J(max)}$, $T_{J(max)}$ is absolute maximum ratings for the junction temperature; $V_{IN}*I_{GND}$ can be ignored due to its small value.

$T_{J(max)}$ is +150°C, θ_{JA} is 200°C/W, no heatsink is required since the package alone will dissipate enough heat to satisfy these requirements, unless the calculated value for power dissipation exceeds the limit.

Example (3.0V version):

I_{OUT} = 300mA, T_A = +50°C, $V_{IN(Max)}$ is:

(150°C-50°C)/(0.3A*200°C/W)+3.0V=4.67V

Therefore, for good performance, please make sure that the input voltage is less than 4.67V without heatsink when T_A = +50°C.

© Diodes Incorporated

Ordering Information

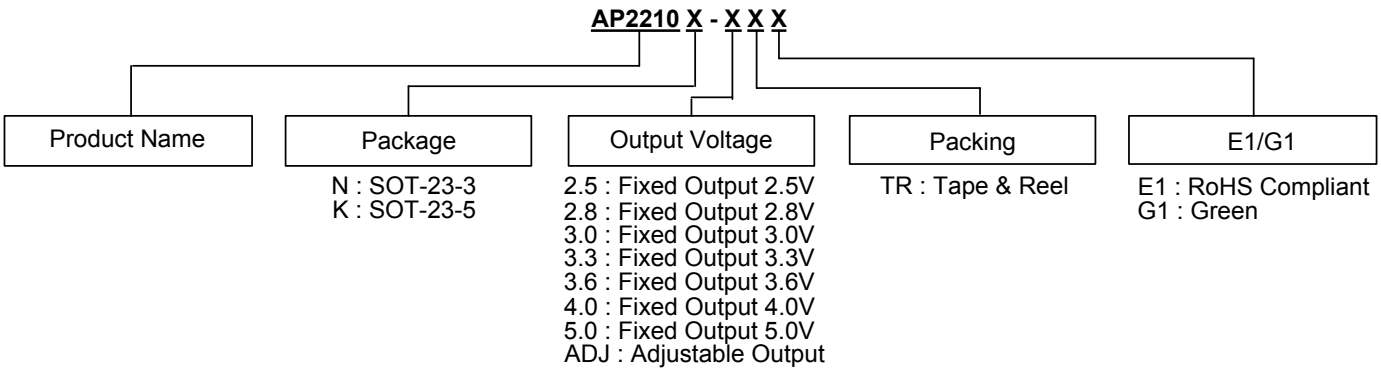

Package	Temperature Range	Part Number		Marking ID		Packing
		RoHS Compliant	Green	RoHS Compliant	Green	
SOT-23-3	-40°C to +85°C	AP2210N-2.8TRE1 (Note 11)	AP2210N-2.8TRG1	EH3	GH3	3000/Tape & Reel
		AP2210N-3.0TRE1 (Note 11)	AP2210N-3.0TRG1	EH4	GH4	3000/Tape & Reel
		AP2210N-3.3TRE1 (Note 11)	AP2210N-3.3TRG1	EH5	GH5	3000/Tape & Reel
		—	AP2210N-3.6TRG1	—	GB7	3000/Tape & Reel
		—	AP2210N-4.0TRG1	—	GC7	3000/Tape & Reel
		—	AP2210N-5.0TRG1	—	GH9	3000/Tape & Reel
SOT-23-5	-40°C to +85°C	AP2210K-2.5TRE1 (Note 11)	—	E5C	—	3000/Tape & Reel
		AP2210K-2.8TRE1 (Note 11)	AP2210K-2.8TRG1	E5F	G5F	3000/Tape & Reel
		AP2210K-3.0TRE1 (Note 11)	AP2210K-3.0TRG1	E5H	G5H	3000/Tape & Reel
		AP2210K-3.3TRE1 (Note 11)	AP2210K-3.3TRG1	E5K	G5K	3000/Tape & Reel
		—	AP2210K-3.6TRG1	—	G5I	3000/Tape & Reel
		—	AP2210K-4.0TRG1	—	G5J	3000/Tape & Reel
		—	AP2210K-5.0TRG1	—	G5L	3000/Tape & Reel
		—	AP2210K-ADJTRG1	—	G5M	3000/Tape & Reel

Lead-Free

Lead-free Green

Notes: 11. Not recommended for new design.

© Diodes Incorporated

Marking Information

(1) SOT-23-3

(Top View)

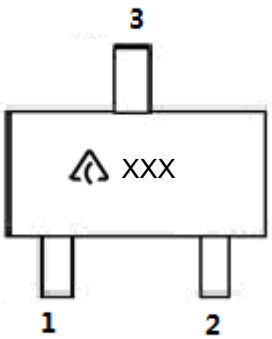

: Logo
XXX: Marking ID
(See Ordering Information)

(2) SOT-23-5

(Top View)

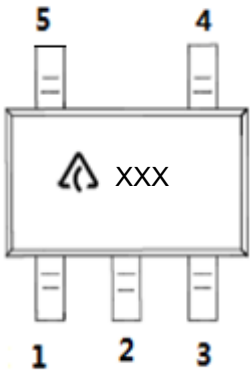

: Logo
XXX: Marking ID
(See Ordering Information)

© Diodes Incorporated

Package Outline Dimensions (All dimensions in mm(inch).)

(1) Package Type: SOT-23-3

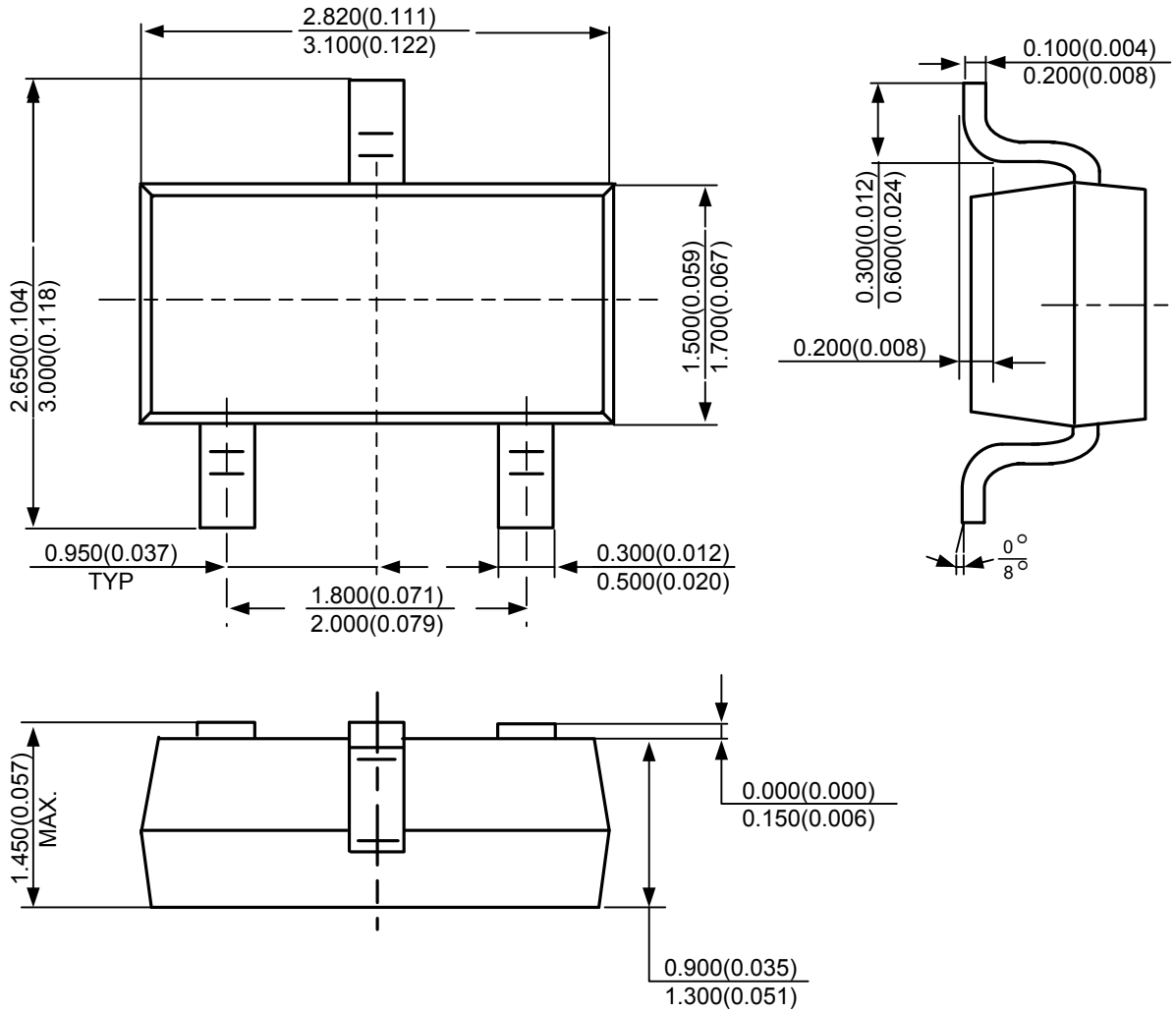

© Diodes Incorporated

Package Outline Dimensions (Cont. All dimensions in mm(inch).)

(2) Package Type: SOT-23-5

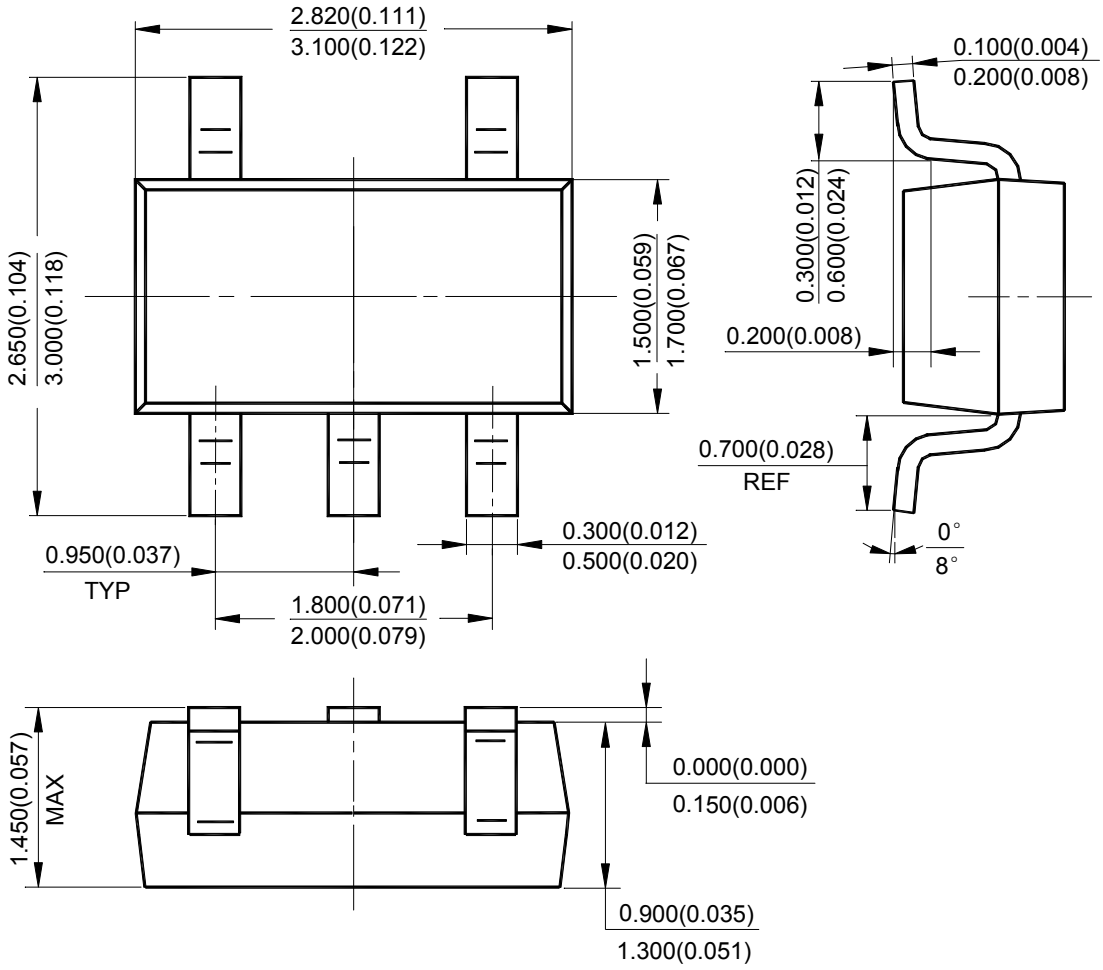

© Diodes Incorporated

Suggested Pad Layout

(1) Package Type: SOT-23-3

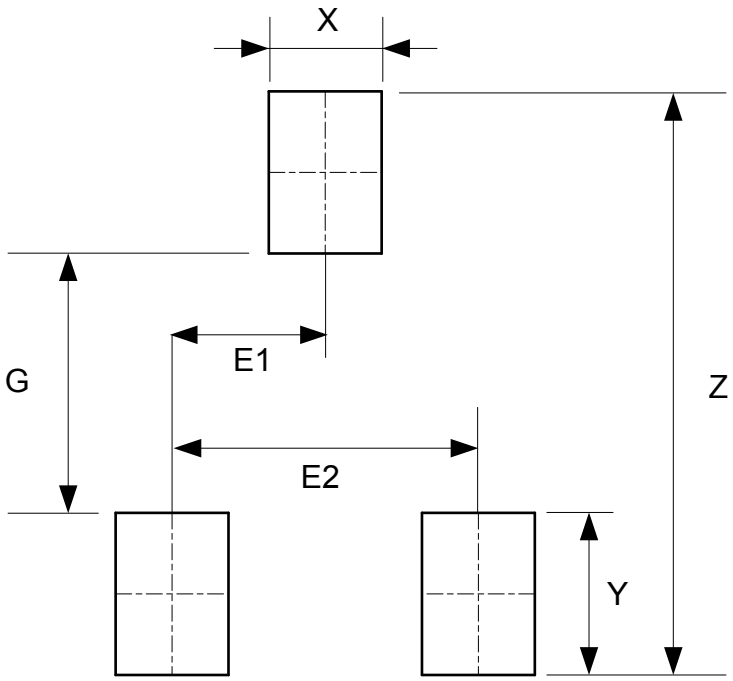

Dimensions	Z (mm)/(inch)	G (mm)/(inch)	X (mm)/(inch)	Y (mm)/(inch)	E1 (mm)/(inch)	E2 (mm)/(inch)
Value	3.600/0.142	1.600/0.063	0.700/0.028	1.000/0.039	0.950/0.037	1.900/0.075

© Diodes Incorporated

Suggested Pad Layout (Cont.)

(2) Package Type: SOT-23-5

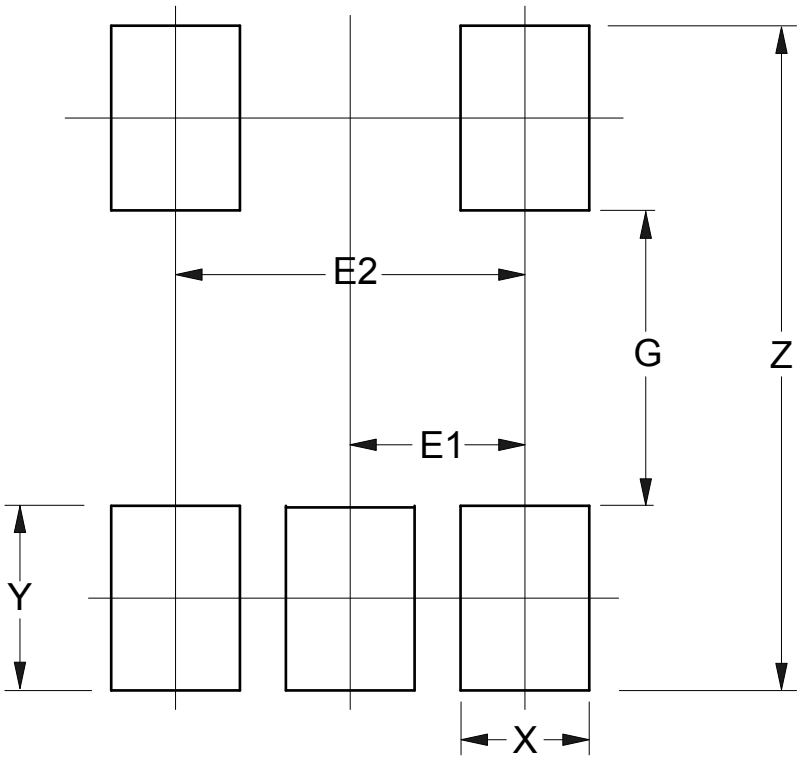

Dimensions	Z (mm)/(inch)	G (mm)/(inch)	X (mm)/(inch)	Y (mm)/(inch)	E1 (mm)/(inch)	E2 (mm)/(inch)
Value	3.600/0.142	1.600/0.063	0.700/0.028	1.000/0.039	0.950/0.037	1.900/0.075

© Diodes Incorporated

IMPORTANT NOTICE

1. DIODES INCORPORATED AND ITS SUBSIDIARIES ("DIODES") MAKE NO WARRANTY OF ANY KIND, EXPRESS OR IMPLIED, WITH REGARDS TO ANY INFORMATION CONTAINED IN THIS DOCUMENT, INCLUDING, BUT NOT LIMITED TO, THE IMPLIED WARRANTIES OF MERCHANTABILITY, FITNESS FOR A PARTICULAR PURPOSE OR NON-INFRINGEMENT OF THIRD PARTY INTELLECTUAL PROPERTY RIGHTS (AND THEIR EQUIVALENTS UNDER THE LAWS OF ANY JURISDICTION).

2. The Information contained herein is for informational purpose only and is provided only to illustrate the operation of Diodes products described herein and application examples. Diodes does not assume any liability arising out of the application or use of this document or any product described herein. This document is intended for skilled and technically trained engineering customers and users who design with Diodes products. Diodes products may be used to facilitate safety-related applications; however, in all instances customers and users are responsible for (a) selecting the appropriate Diodes products for their applications, (b) evaluating the suitability of the Diodes products for their intended applications, (c) ensuring their applications, which incorporate Diodes products, comply the applicable legal and regulatory requirements as well as safety and functional-safety related standards, and (d) ensuring they design with appropriate safeguards (including testing, validation, quality control techniques, redundancy, malfunction prevention, and appropriate treatment for aging degradation) to minimize the risks associated with their applications.

3. Diodes assumes no liability for any application-related information, support, assistance or feedback that may be provided by Diodes from time to time. Any customer or user of this document or products described herein will assume all risks and liabilities associated with such use, and will hold Diodes and all companies whose products are represented herein or on Diodes' websites, harmless against all damages and liabilities.

4. Products described herein may be covered by one or more United States, international or foreign patents and pending patent applications. Product names and markings noted herein may also be covered by one or more United States, international or foreign trademarks and trademark applications. Diodes does not convey any license under any of its intellectual property rights or the rights of any third parties (including third parties whose products and services may be described in this document or on Diodes' website) under this document.

5. Diodes products are provided subject to Diodes' Standard Terms and Conditions of Sale (https://www.diodes.com/about/company/terms-and-conditions/terms-and-conditions-of-sales/) or other applicable terms. This document does not alter or expand the applicable warranties provided by Diodes. Diodes does not warrant or accept any liability whatsoever in respect of any products purchased through unauthorized sales channel.

6. Diodes products and technology may not be used for or incorporated into any products or systems whose manufacture, use or sale is prohibited under any applicable laws and regulations. Should customers or users use Diodes products in contravention of any applicable laws or regulations, or for any unintended or unauthorized application, customers and users will (a) be solely responsible for any damages, losses or penalties arising in connection therewith or as a result thereof, and (b) indemnify and hold Diodes and its representatives and agents harmless against any and all claims, damages, expenses, and attorney fees arising out of, directly or indirectly, any claim relating to any noncompliance with the applicable laws and regulations, as well as any unintended or unauthorized application.

7. While efforts have been made to ensure the information contained in this document is accurate, complete and current, it may contain technical inaccuracies, omissions and typographical errors. Diodes does not warrant that information contained in this document is error-free and Diodes is under no obligation to update or otherwise correct this information. Notwithstanding the foregoing, Diodes reserves the right to make modifications, enhancements, improvements, corrections or other changes without further notice to this document and any product described herein. This document is written in English but may be translated into multiple languages for reference. Only the English version of this document is the final and determinative format released by Diodes.

8. Any unauthorized copying, modification, distribution, transmission, display or other use of this document (or any portion hereof) is prohibited. Diodes assumes no responsibility for any losses incurred by the customers or users or any third parties arising from any such unauthorized use.

Copyright © 2021 Diodes Incorporated

www.diodes.com

ENTEGRECİ

Bu belge www.entegreci.com üzerinden sunulmaktadır.

Elektronik komponent tedarikinde Entegreci

Entegreci, Eskişehir merkezli, Türkiye geneline satış yapan bir elektronik komponent mağazasıdır. Entegreler (IC), mikrodenetleyiciler, transistörler, diyotlar, pasif elemanlar, konnektörler, modüller ve geliştirme kartları tek adetten seri üretim adetlerine kadar satılır. Ürün sayfalarında güncel stok durumunu, fiyatı ve datasheet bağlantısını bulabilirsiniz.

Parça koduyla arama

Üretici parça numarasını yazın; stok ve fiyatı hemen görün.

www.entegreci.com

Ürün kategorileri

Entegreden kapasitöre tüm elektronik komponent kategorileri.

Kategorilere göz atın

Üreticiler

Aradığınız üreticinin ürünlerini tek sayfada inceleyin.

Üreticileri görün

Toplu alım ve teklif

Listede olmayan ya da yüksek adetli parçalar için teklif isteyin.

Teklif isteyin

www.entegreci.com | **destek@entegreci.com** | **0850 305 90 34**

Entegreci is an online electronic components store based in Türkiye. Search by manufacturer part number to see stock, prices and datasheets for integrated circuits, microcontrollers, transistors, passive components and connectors, or request a quote for parts that are not listed.

Bu sayfa Entegreci tarafından eklenmiştir. Belgenin önceki sayfaları asıl yayıncısına aittir ve içeriği değiştirilmemiştir; en güncel sürüm için belgenin yayıncısına başvurun.