NEW PRODUCT

Description

The AP7168 is a 1.2A, adjustable output voltage, ultra-low dropout linear regulator. The device includes pass element, error amplifier, band-gap reference, current limit and thermal shutdown circuitry. The device is turned on when EN pin is set to logic high level. A Power-OK (POK) output is available for power sequence control.

The characteristics of the low dropout voltage and low quiescent current make it suitable for low to medium power applications, for example, laptop computers, audio and video applications, and battery powered devices. The typical quiescent current is approximately 125µA.

Built-in current-limit and thermal-shutdown functions prevent IC from damage in fault conditions. The AP7168 is available in SO-8EP package.

Pin Assignments

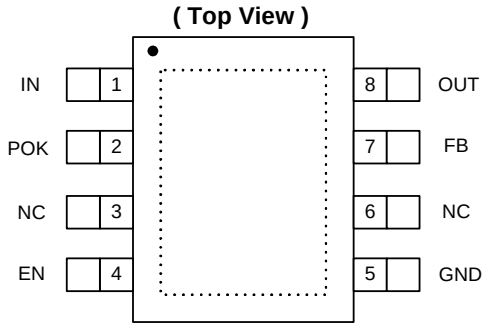

SO-8EP

Features

- Wide input voltage range: 2.2V – 5.5V
- 230mV very low dropout at 500mA load
- 500mV very low dropout at 1A load
- Very low quiescent current (I_Q): 125µA typical
- Adjustable output voltage range: 0.8V to 5.0V
- Very fast transient response
- High PSRR
- Accurate voltage regulation
- Current limiting and short circuit protection
- Thermal shutdown protection
- Stable with any type output capacitor ≥ 4.7µF
- Ambient temperature range -40ºC to 85°C
- SO-8EP: Available in “Green” Molding Compound (No Br, Sb)
- Lead Free Finish/ RoHS Compliant (Note 1)

Applications

- Servers and laptops
- Smart phone and PDA
- MP3/MP4
- Bluetooth headset
- Low and medium power applications
- FPGA and DSP core or I/O power

Notes: 1. EU Directive 2002/95/EC (RoHS). All applicable RoHS exemptions applied. Please visit our website at http://www.diodes.com/products/lead_free.html.

Typical Application Circuit

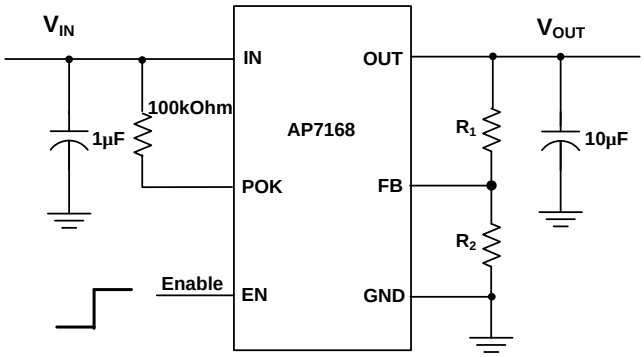

$$V_{OUT} = V_{REF}\left(1+\frac{R_1}{R_2}\right)$$

© Diodes Incorporated

NEW PRODUCT

Pin Descriptions

Name	Pin Number	Description
IN	1	Voltage input pins, to be tied together externally. Bypass to ground through at least 1µF capacitor.
POK	2	Power-OK output, active-high open-drain.
EN	4	Enable input, active high.
GND	5	Ground.
FB	7	Output feedback.
OUT	8	Voltage output pins, to be tied together externally. Bypass to ground through at least 4.7µF ceramic capacitor.
NC	3, 6	No connection.

Functional Block Diagram

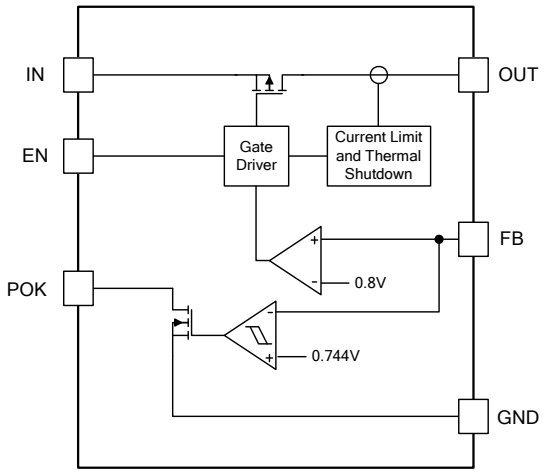

Absolute Maximum Ratings

Symbol	Parameter		Ratings	Unit
ESD HBM	Human Body Model ESD Protection		4	KV
ESD MM	Machine Model ESD Protection		300	V
V_{IN}	Input Voltage		7	V
	OUT, FB, POK, EN Voltage		V_{IN} + 0.3	V
	Continuous Load Current		Internal Limited	
T_J	Operating Junction Temperature Range		-40 ~ 150	°C
T_{ST}	Storage Temperature Range		-65 ~150	°C
P_D	Power Dissipation	SO-8EP (Note 2, 4)	4.0	W

Notes: 2. Ratings apply to ambient temperature at 25°C

Recommended Operating Conditions

Symbol	Parameter	Min	Max	Unit
V_{IN}	Input voltage	2.2	5.5	V
I_{OUT}	Output Current	0	1.2	A
T_A	Operating Ambient Temperature	-40	85	°C

© Diodes Incorporated

NEW PRODUCT

Electrical Characteristics

(T_A = 25°C, V_{IN} = V_{OUT} +1V, C_{IN} = 1µF, C_{OUT} = 1µF, V_{EN} = 2V, unless otherwise stated)

Symbol	Parameter	Test Conditions	Min	Typ.	Max	Unit
I_Q	Input Quiescent Current	I_{OUT}= 0	—	125	180	µA
I_{SHDN}	Input Shutdown Current	V_{EN} = 0V, I_{OUT} = 0 (Note 3)	-1	0.1	1	µA
$V_{Dropout}$	Dropout Voltage	$V_{OUT} \geq$ 1.5V, I_{OUT} = 0.5A		230		mV
		$V_{OUT} \geq$ 1.5V, I_{OUT} = 1A		500	800	mV
V_{REF}	FB reference voltage			0.8		V
I_{FB}	FB leakage		—	0.01	1	µA
V_{OUT}	Output Voltage Total Accuracy		-3		3	%
$\frac{\Delta V_{OUT}}{\Delta V_{IN}} / V_{OUT}$	Line Regulation	V_{IN} = V_{OUT} +1V to 5.5V, I_{OUT} = 1mA		0.02		%/V
$\Delta V_{OUT} / V_{OUT}$	Load Regulation	I_{OUT} from 1mA to 1A	-1.5		1.5	%
t_{ST}	Start-up Time, from EN high to POK high	V_{EN} = 0V to 2.0V, I_{OUT} = 100mA, V_{IN} = 3.3V		190		µs
PSRR	Power Supply Rejection Ratio	1kHz, V_{IN} = 3.3V, V_{OUT} = 1.2V, I_{OUT} = 100mA		60		dB
I_{LIMIT}	Current limit	V_{OUT} = 1.8V, R_{OUT} = 0.5Ω	1.2	1.6		A
I_{SHORT}	Short-circuit Current	V_{IN} = 3.3V, V_{OUT} < 0.2V		750		mA
V_{IL}	EN Input Logic Low Voltage				0.4	V
V_{IH}	EN Input Logic High Voltage		1.4			V
I_{EN}	EN Input leakage	V_{EN} = 0V or 5.5V	—	0.01	1	µA
V_{OL}	POK output low voltage	Force 2mA		100	200	mV
$V_{POK_TH_UP}$	Output voltage (rising) POK threshold	FB (or OUT for fixed version) rising	87%	92%	97%	V_{ref}
V_{POK_Hys}	Output voltage POK hysteresis			4%		V_{ref}
POK deglitch		V_{IN} = 3.3V, V_{OUT} = 1.2V		160		µs
I_{POK_LK}	POK leakage current	V_{POK} = 5.5V	—	0.01	1	µA
T_{SHDN}	Thermal shutdown threshold			145		°C
T_{HYS}	Thermal shutdown hysteresis			25		°C
θ_{JA}	Thermal Resistance Junction-to-Ambient	SOP-8L-EP (Note 4)		27		°C/W

Notes: 3. POK pin must be disconnected from IN pin.
4. Test condition for SO-8EP: Device mounted on 2" x 2" FR-4 substrate PCB, 2oz copper, with minimum recommended pad on top layer and thermal vias to bottom layer ground plane.

© Diodes Incorporated

NEW PRODUCT

Typical Performance Characteristics

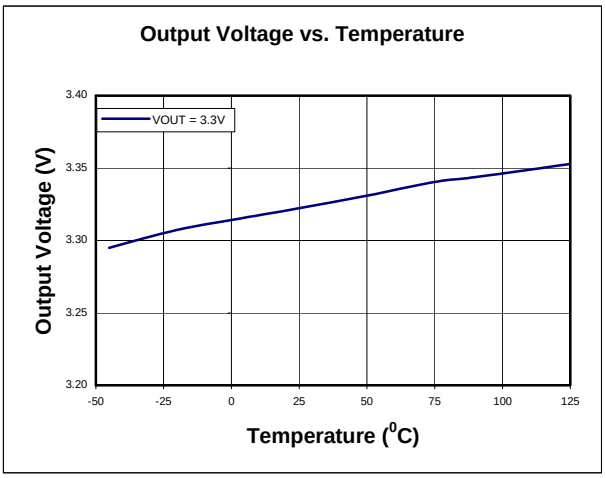

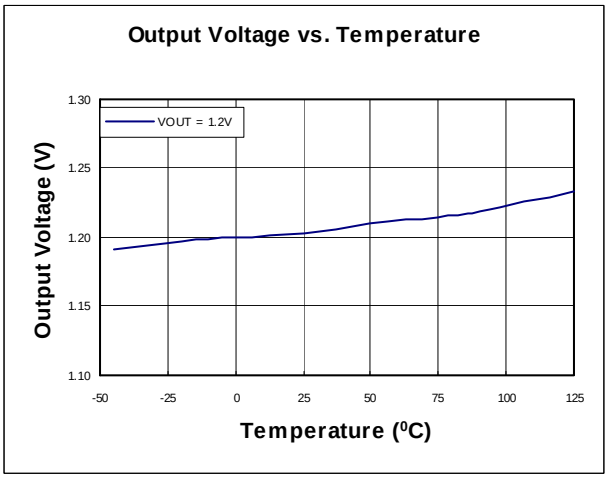

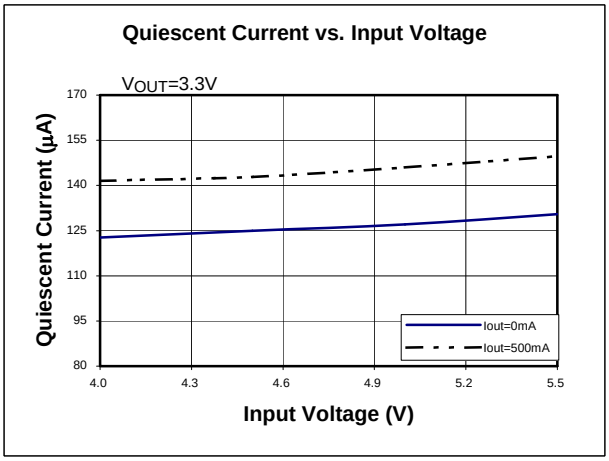

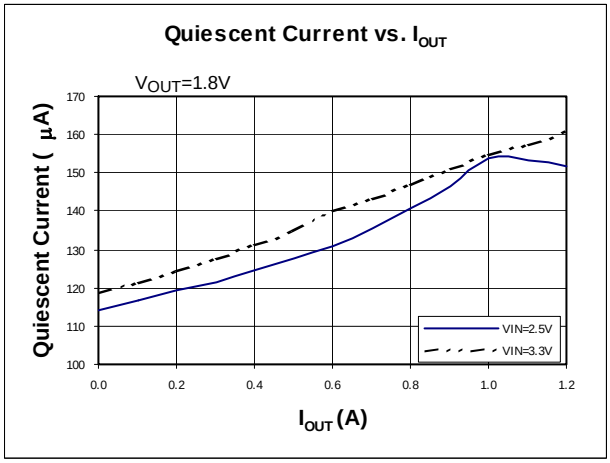

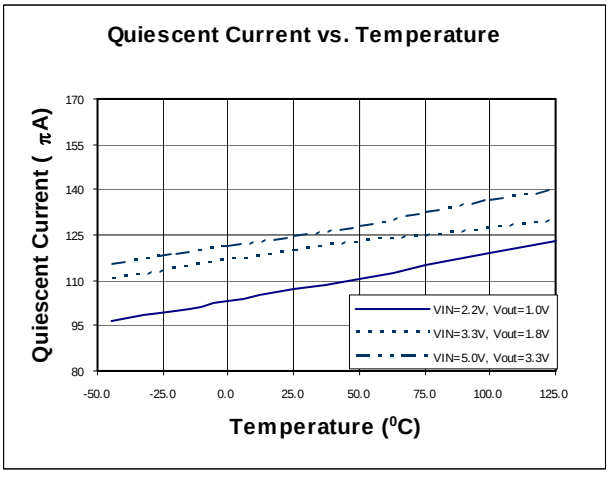

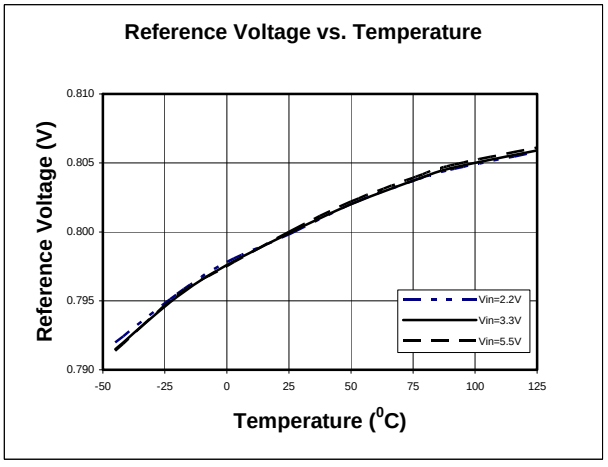

© Diodes Incorporated

NEW PRODUCT

Typical Performance Characteristics (Continued)

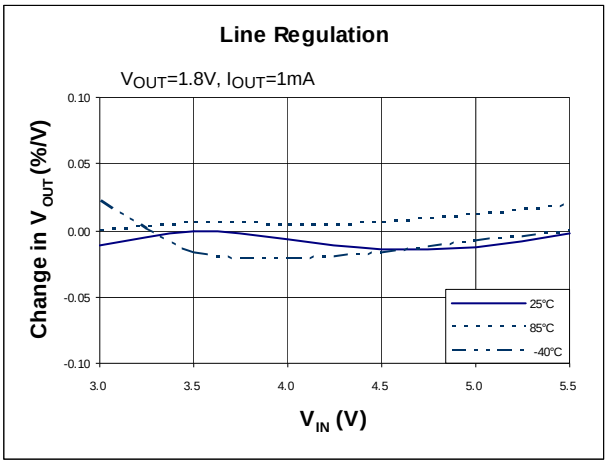

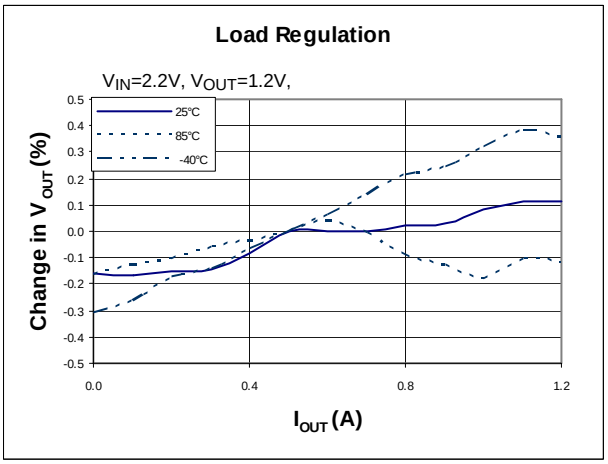

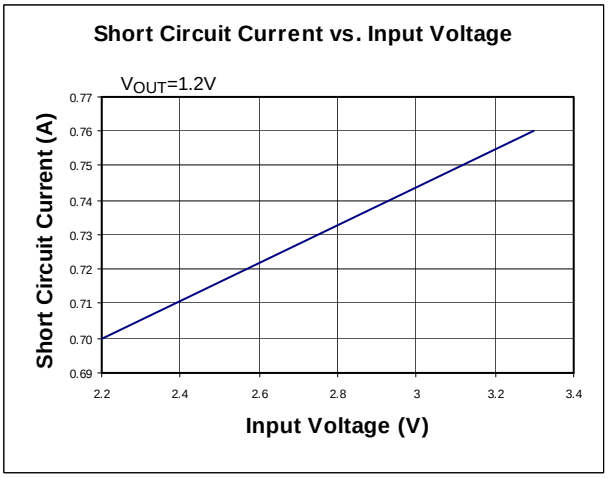

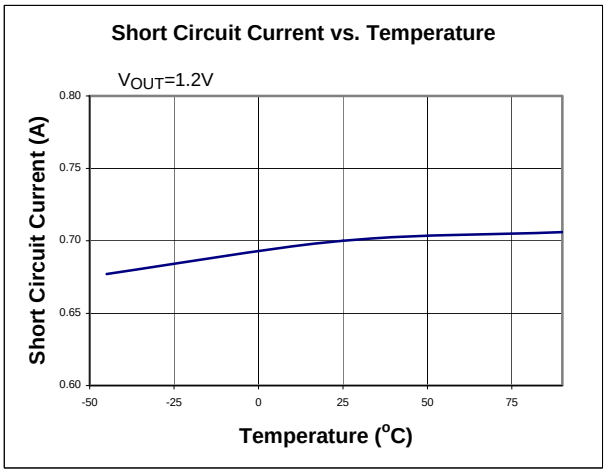

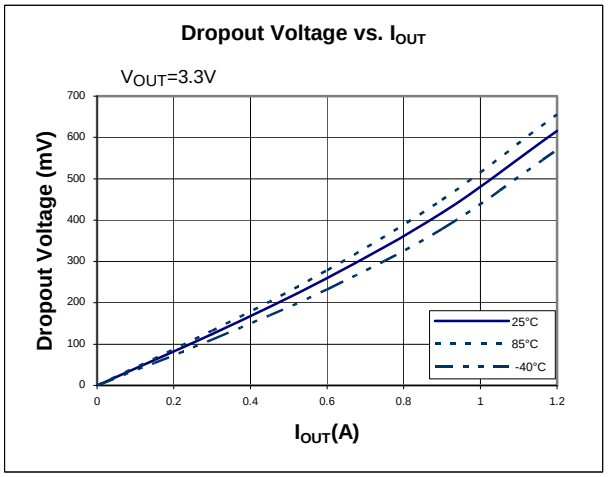

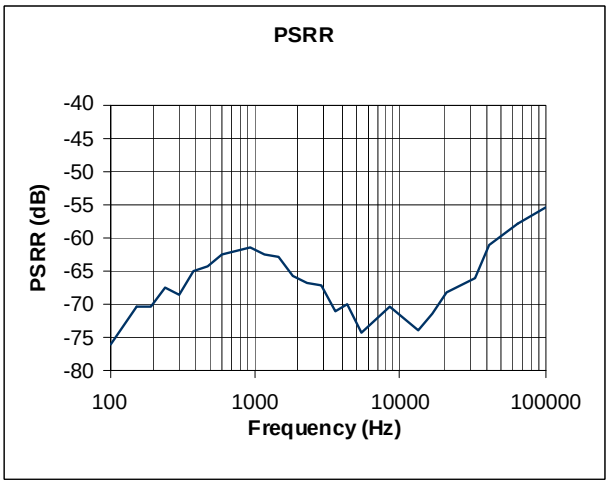

© Diodes Incorporated

NEW PRODUCT

Typical Performance Characteristics (Continued)

Line Transient Response



Line Transient Response



Output Load Transient Response (V_{OUT}=1.8V)

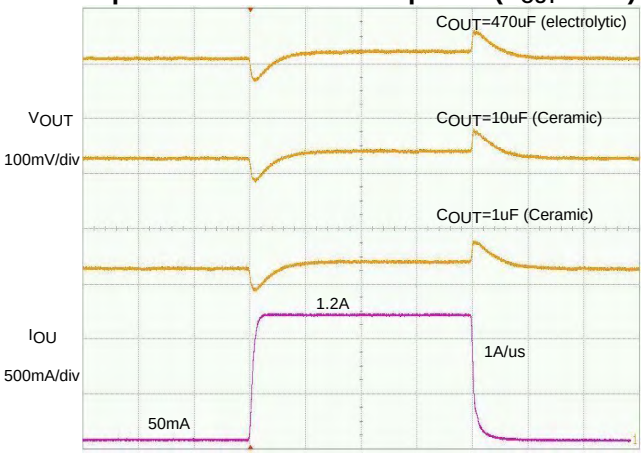

Output Load Transient Response (V_{OUT}=3.3V)

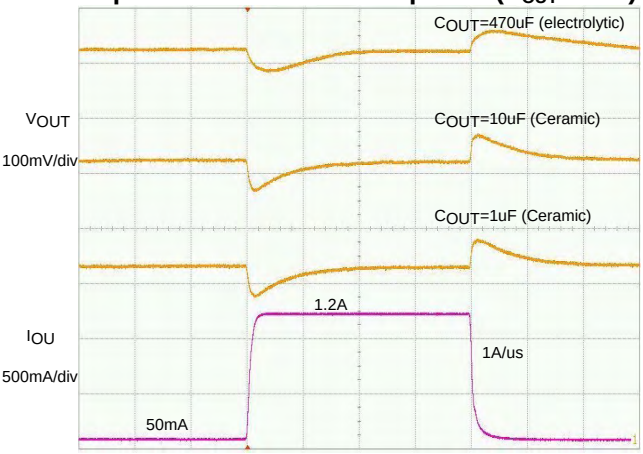

Start-up Time (V_{OUT}=1.2V, I_{OUT}=0.1A)

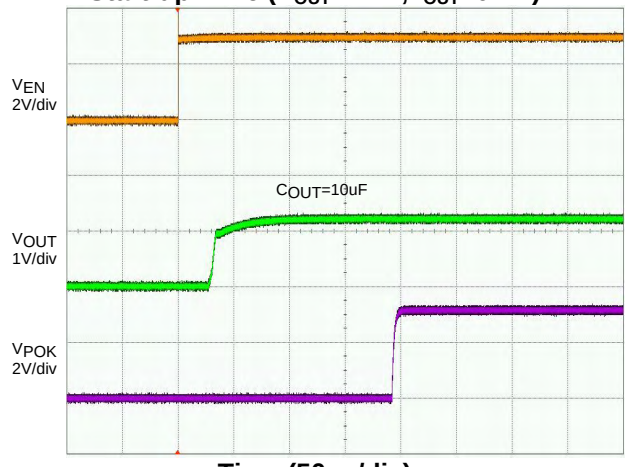

Start-up Time (V_{OUT}=1.2V, I_{OUT}=1.2A)

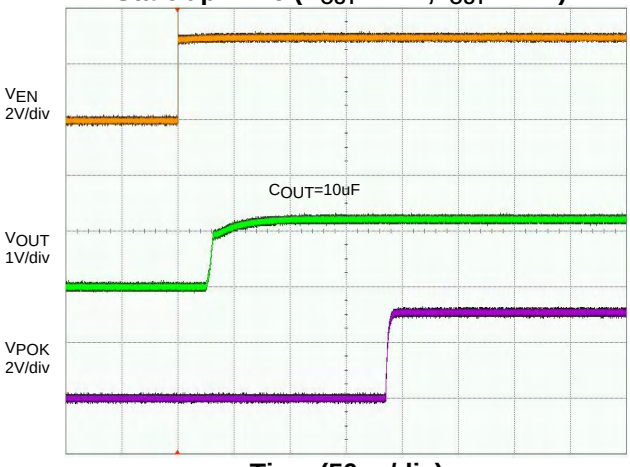

© Diodes Incorporated

NEW PRODUCT

Typical Performance Characteristics (Continued)

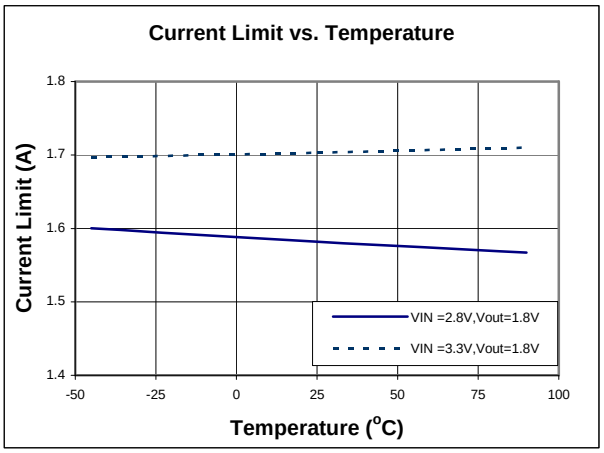

Application Note

Input Capacitor

A 1μF ceramic capacitor is recommended to connect between IN and GND pins to decouple input power supply glitch and noise. The amount of the capacitance may be increased without limit. A lower ESR (Equivalent Series Resistance) capacitor allows the use of less capacitance, while higher ESR type requires more capacitance. This input capacitor should be located as close as possible to the device to assure input stability and less noise. For PCB layout, a wide copper trace is required for both IN and GND.

Output Capacitor

The output capacitor is required to stabilize and help the transient response of the LDO. The AP7168 is designed to have excellent transient response for most applications with a small amount of output capacitance. The AP7168 is stable for all available types and values of output capacitors ≥ 4.7μF. The device is also stable with multiple capacitors in parallel, which can be of any type of value. Additional capacitance helps to reduce undershoot and overshoot during transient. This capacitor should be placed as close as possible to OUT and GND pins for optimum performance.

Adjustable Operation

The AP7168 provides output voltage from 0.8V to 5.0V through external resistor divider as shown below.

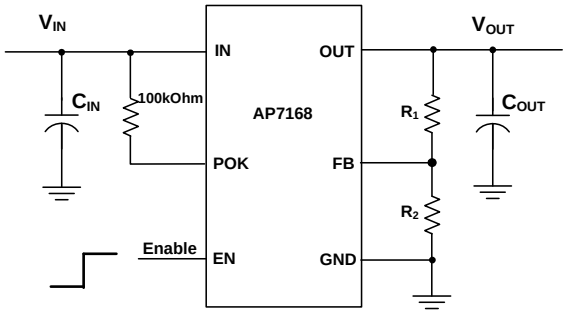

The output voltage is calculated by:

$$V_{OUT} = V_{REF}\left(1+\frac{R_1}{R_2}\right)$$

Where V_{REF}=0.8V (the internal reference voltage)

Rearranging the equation will give the following equation to find the approximate resistor divider values:

$$R_1 = R_2\left(\frac{V_{OUT}}{V_{REF}}-1\right)$$

To maintain the stability of the internal reference voltage, R_2 needs to be kept smaller than 250kΩ.

© Diodes Incorporated

NEW PRODUCT

Application Note (Continued)

No Load Stability
Other than external resistor divider, no minimum load is required to keep the device stable. The device will remain stable and regulated in no load condition.

ENABLE/SHUTDOWN Operation
The AP7168 is turned on by setting the EN pin high, and is turned off by pulling it low. If this feature is not used, the EN pin should be tied to IN pin to keep the regulator output on at all time. To ensure proper operation, the signal source used to drive the EN pin must be able to swing above and below the specified turn-on/off voltage thresholds listed in the Electrical Characteristics section under V_{IL} and V_{IH}.

POWER-OK
The Power-Ok (POK) pin is an active high open-drain output. It can be connected to any 5.5V or lower rail through an external pull-up resistor. The recommended sink current of POK pin is up to 4mA, so the pull-up resistor for POK should be in the range of 10kΩ to 1MΩ. If output voltage monitoring is not needed, the POK pin can be left floating.

Current Limit Protection
When output current at OUT pin is higher than current limit threshold, the current limit protection will be triggered and clamp the output current to approximately 1.6A (1.2A min) to prevent over-current and to protect the regulator from damage due to overheating.

Short Circuit Protection
When OUT pin is short-circuited to GND or OUT pin voltage is less than 200mV, short circuit protection will be triggered and clamp the output current to approximately 750mA. This feature protects the regulator from over-current and damage due to overheating.

Low Quiescent Current
The AP7168, consuming only around 150μA for all input range and output loading, provides great power saving in portable and low power applications.

Wide Output Range
The AP7168, with a wide output range of 0.8V to 5.0V, provides a versatile solution for many portable and low power applications.

Thermal Shutdown Protection
Thermal protection disables the output when the junction temperature rises to approximately +145°C, allowing the device to cool down. When the junction temperature reduces to approximately +120°C the output circuitry is enabled again. Depending on power dissipation, thermal resistance, and ambient temperature, the thermal protection circuit may cycle on and off. This cycling limits the heat dissipation of the regulator, protecting it from damage due to overheating.

Power Dissipation
The device power dissipation and proper sizing of the thermal plane that is connected to the thermal pad is critical to avoid thermal shutdown and ensuring reliable operation. Power dissipation of the device depends on input voltage and load conditions and can be calculated by:

$$P_D = (V_{IN} - V_{OUT}) x I_{OUT}$$

The AP7168 is available in the SO-8EP packages, both with exposed pad, which is the primary conduction path for heat to the printed circuit board (PCB). The pad can be connected to ground or be left floating; however, to ensure the device will not overheat, it should be attached to an appropriate amount of copper PCB area.

However, the maximum power dissipation that can be handled by the device depends on the maximum junction to ambient thermal resistance, maximum ambient temperature, and maximum device junction temperature, which can be approximated by the equation below:

$$P_D(max@T_A) = \frac{(+150°C - T_A)}{R_{\theta JA}}$$

© Diodes Incorporated

NEW PRODUCT

Ordering Information

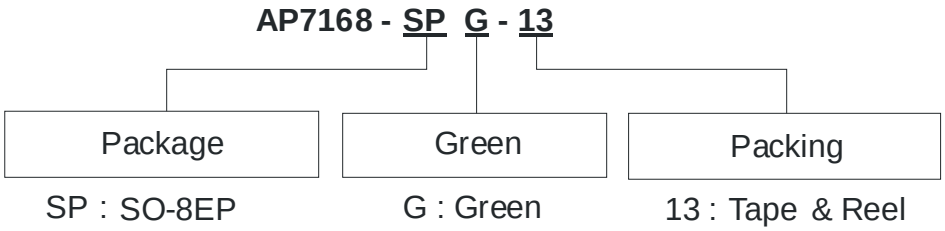

Device	Package Code	Packaging (Note 5)	13" Tape and Reel	
			Quantity	Part Number Suffix
AP7168-SPG-13	SP	SO-8EP	2500/Tape & Reel	-13

Notes: 5. Pad layout as shown on Diodes Inc. suggested pad layout document AP02001, which can be found on our website at http://www.diodes.com/datasheets/ap02001.pdf.

Marking Information

SO-8EP

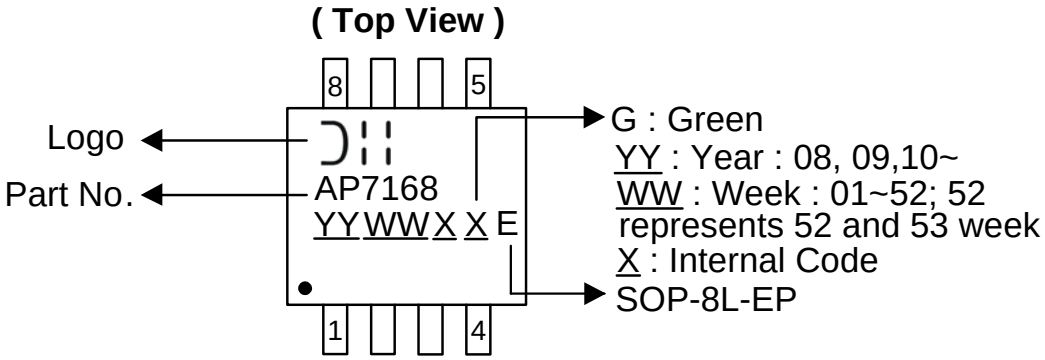

© Diodes Incorporated

NEW PRODUCT

Package Outline Dimensions

Package Type: SO-8EP

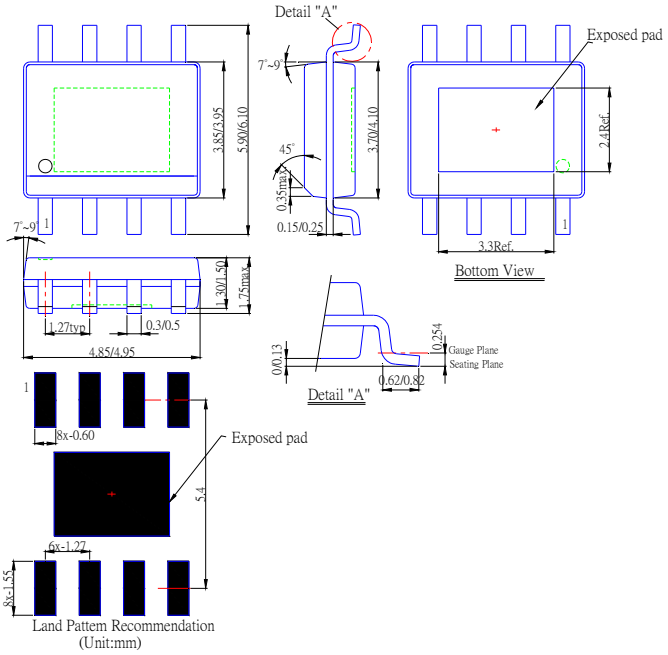

Notes: 6. All dimensions are in millimeters. Angles are in degrees.
7. Coplanarity applies to the exposed heat sink slug as well as the terminals.

© Diodes Incorporated

NEW PRODUCT

IMPORTANT NOTICE

DIODES INCORPORATED MAKES NO WARRANTY OF ANY KIND, EXPRESS OR IMPLIED, WITH REGARDS TO THIS DOCUMENT, INCLUDING, BUT NOT LIMITED TO, THE IMPLIED WARRANTIES OF MERCHANTABILITY AND FITNESS FOR A PARTICULAR PURPOSE (AND THEIR EQUIVALENTS UNDER THE LAWS OF ANY JURISDICTION).

Diodes Incorporated and its subsidiaries reserve the right to make modifications, enhancements, improvements, corrections or other changes without further notice to this document and any product described herein. Diodes Incorporated does not assume any liability arising out of the application or use of this document or any product described herein; neither does Diodes Incorporated convey any license under its patent or trademark rights, nor the rights of others. Any Customer or user of this document or products described herein in such applications shall assume all risks of such use and will agree to hold Diodes Incorporated and all the companies whose products are represented on Diodes Incorporated website, harmless against all damages.

Diodes Incorporated does not warrant or accept any liability whatsoever in respect of any products purchased through unauthorized sales channel.
Should Customers purchase or use Diodes Incorporated products for any unintended or unauthorized application, Customers shall indemnify and hold Diodes Incorporated and its representatives harmless against all claims, damages, expenses, and attorney fees arising out of, directly or indirectly, any claim of personal injury or death associated with such unintended or unauthorized application.

Products described herein may be covered by one or more United States, international or foreign patents pending. Product names and markings noted herein may also be covered by one or more United States, international or foreign trademarks.

LIFE SUPPORT

Diodes Incorporated products are specifically not authorized for use as critical components in life support devices or systems without the express written approval of the Chief Executive Officer of Diodes Incorporated. As used herein:

A. Life support devices or systems are devices or systems which:

1. are intended to implant into the body, or

2. support or sustain life and whose failure to perform when properly used in accordance with instructions for use provided in the labeling can be reasonably expected to result in significant injury to the user.

B. A critical component is any component in a life support device or system whose failure to perform can be reasonably expected to cause the failure of the life support device or to affect its safety or effectiveness.

Customers represent that they have all necessary expertise in the safety and regulatory ramifications of their life support devices or systems, and acknowledge and agree that they are solely responsible for all legal, regulatory and safety-related requirements concerning their products and any use of Diodes Incorporated products in such safety-critical, life support devices or systems, notwithstanding any devices- or systems-related information or support that may be provided by Diodes Incorporated. Further, Customers must fully indemnify Diodes Incorporated and its representatives against any damages arising out of the use of Diodes Incorporated products in such safety-critical, life support devices or systems.

Copyright © 2010, Diodes Incorporated

www.diodes.com

ENTEGRECİ

Bu belge www.entegreci.com üzerinden sunulmaktadır.

Elektronik komponent tedarikinde Entegreci

Entegreci, Eskişehir merkezli, Türkiye geneline satış yapan bir elektronik komponent mağazasıdır. Entegreler (IC), mikrodenetleyiciler, transistörler, diyotlar, pasif elemanlar, konnektörler, modüller ve geliştirme kartları tek adetten seri üretim adetlerine kadar satılır. Ürün sayfalarında güncel stok durumunu, fiyatı ve datasheet bağlantısını bulabilirsiniz.

Parça koduyla arama

Üretici parça numarasını yazın; stok ve fiyatı hemen görün.

www.entegreci.com

Ürün kategorileri

Entegreden kapasitöre tüm elektronik komponent kategorileri.

Kategorilere göz atın

Üreticiler

Aradığınız üreticinin ürünlerini tek sayfada inceleyin.

Üreticileri görün

Toplu alım ve teklif

Listede olmayan ya da yüksek adetli parçalar için teklif isteyin.

Teklif isteyin

www.entegreci.com | **destek@entegreci.com** | **0850 305 90 34**

Entegreci is an online electronic components store based in Türkiye. Search by manufacturer part number to see stock, prices and datasheets for integrated circuits, microcontrollers, transistors, passive components and connectors, or request a quote for parts that are not listed.

Bu sayfa Entegreci tarafından eklenmiştir. Belgenin önceki sayfaları asıl yayıncısına aittir ve içeriği değiştirilmemiştir; en güncel sürüm için belgenin yayıncısına başvurun.