THE AP2127 IS NOT RECOMMENDED FOR NEW DESIGNS. PLEASE USE THE AP7215.

AP7217

500mA CMOS LDO

Description

The AP7217 low-dropout linear regulator operates from a 3.3V to 5.5V supply and delivers a guaranteed 500mA (min) continuous load current.

The high-accuracy output voltage is preset to an internally trimmed voltage. An active-low open-drain reset output remains asserted for at least 20ms (TYP) after output voltage reaches V_{DF}.

The space-saving SOP-8L package is suitable for “pocket” and hand-held applications.

Pin Assignments

(Top View)

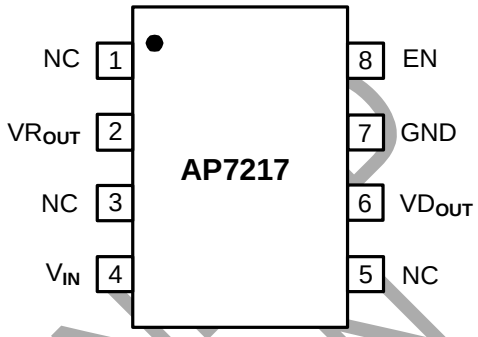

SOP-8L

Features

- Very Low Dropout Voltage
- Low Current Consumption: Typ. 50μA
- Output Voltage: 3.3V
- Guaranteed 500mA (min) Output
- Input Range up to 5.5V
- Current Limiting
- Stable with either electrolytic capacitor or low-ESR MLCC (multi-layer ceramic capacitor) Low Temperature Coefficient
- SOP-8L: Available in “Green” Molding Compound (No Br, Sb)
- Lead Free Finish/ RoHS Compliant (Note 1)

Applications

- HD/ BlueRay DVD & MP3/4 Players
- Mobile Handsets and Smartphones
- Digital Still Camera
- Hand-Held Computers

Notes: 1. EU Directive 2002/95/EC (RoHS). All applicable RoHS exemptions applied. Please visit our website at http://www.diodes.com/products/lead_free.html.

Typical Application Circuit

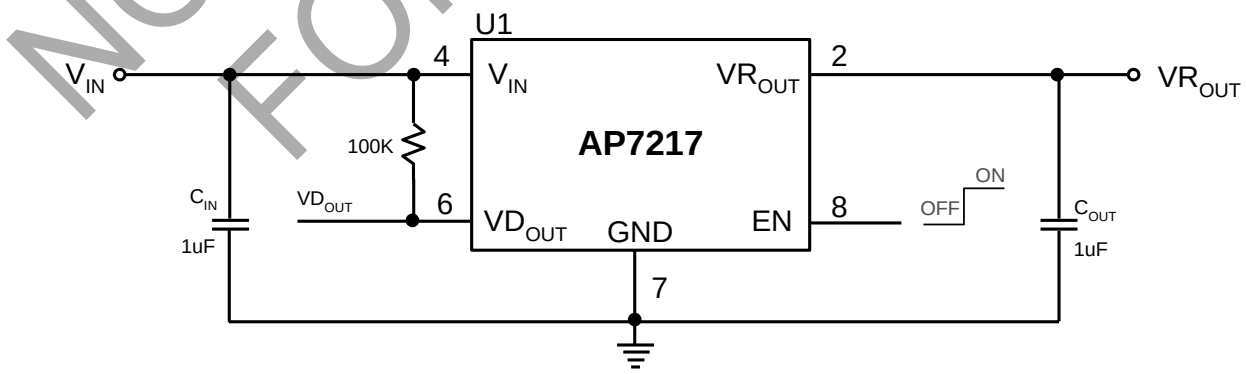

NOT RECOMMENDED FOR NEW DESIGN

© 2025 Copyright Diodes Incorporated. All Rights Reserved.

Functional Block Diagram

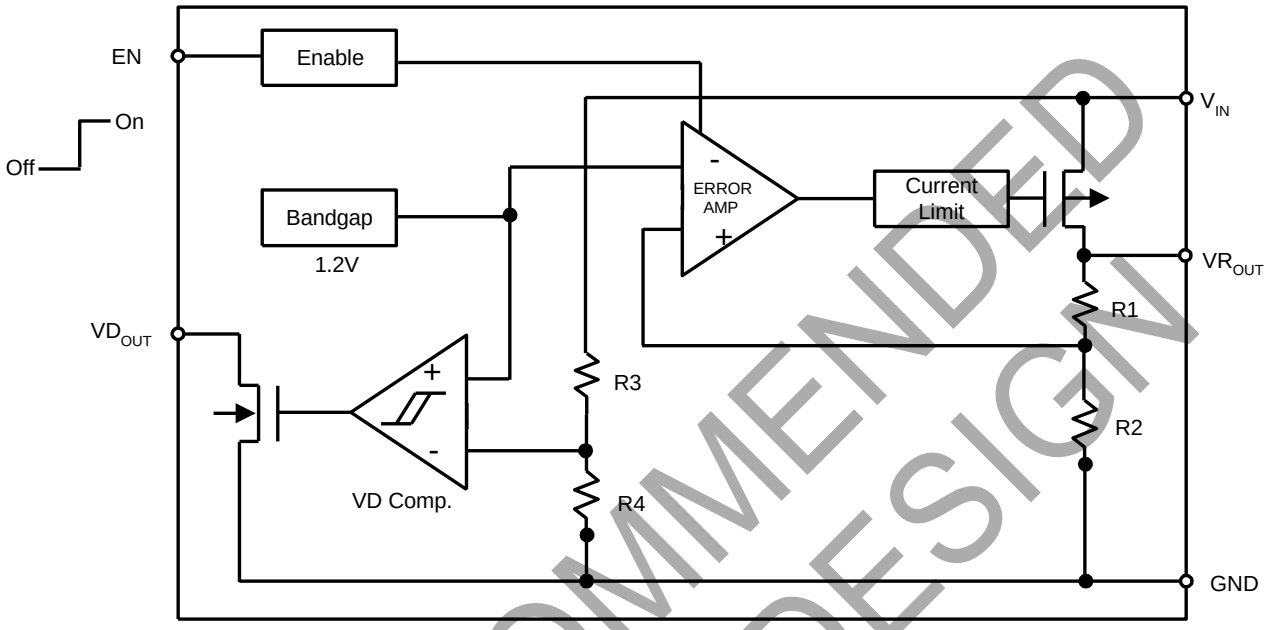

NOT RECOMMENDED FOR NEW DESIGN

Pin Descriptions

Pin Name	Pin No.	Description
NC	1	No Connection
VR_{OUT}	2	Voltage Output
NC	3	No Connection
V_{IN}	4	Supply Voltage
NC	5	No connection
VD_{OUT}	6	V_D Output (Reset on I/P)
GND	7	Ground
EN	8	Enable (V_R On/Off)

© 2025 Copyright Diodes Incorporated. All Rights Reserved.

Absolute Maximum Ratings

Symbol	Parameter	Rating	Unit
ESD HBM	Human Body Model ESD Protection	2	KV
ESD MM	Machine Model ESD Protection	450	V
V_{IN}	Input Voltage	+6	V
I_{OUT}	Output Current	$P_D/ (V_{IN}-V_O)$	mA
VR_{OUT}	Output Voltage	GND - 0.3 ~ V_{IN}+ 0.3	V
T_J	Operating Junction Temperature Range	-40 to +125	ºC
$T_{J(MAX)}$	Maximum Junction Temperature	150	ºC
P_D	Internal Power Dissipation	1.2	W

Recommended Operating Conditions

Symbol	Parameter	Min	Max	Unit
V_{IN}	Input Voltage	3.3	5.5	V
I_{OUT}	Output Current	0	500	mA
T_A	Operating Ambient Temperature	-40	85	ºC

NOT RECOMMENDED FOR NEW DESIGN

© 2025 Copyright Diodes Incorporated. All Rights Reserved.

Electrical Characteristics (V_{IN} = 12V, T_A = +25°C, unless otherwise noted)

(T_A = 25°C, C_{IN} = 1µF, C_{OUT} = 1µF, V_{EN} = V_{IN}, unless otherwise noted)

Symbol	Parameter	Test Conditions	Min	Typ.	Max	Unit
I_Q	Quiescent Current	I_O = 0mA	-	50	70	µA
I_{STB}	Standby Current	V_{EN} = Off V_{IN} = 5.0V		15	30	µA
VR_{OUT}	Output Voltage Accuracy	I_O = 30mA, V_{IN} = 5V	3.234	3.300	3.366	V
	VR_{OUT} Temperature Coefficient	-40°C to 85°C, I_{OUT} = 30mA		±100		ppm / °C
$V_{DROPOUT}$	Dropout Voltage	I_{OUT} = 100mA		100	250	mV
I_{OUT}	Maximum Output Current	V_{IN} = 5.3V	500			mA
I_{LIMIT}	Current Limit	V_{IN} = 5.3V		600		mA
I_{short}	Short Circuit Current	V_{IN} = 5.3V		50		mA
$\Delta V_{LINE}/\Delta V_{IN}/VR_{OUT}$	Line Regulation	4.3V ≤ V_{IN} ≤ 5.5V; I_{OUT} = 30mA		0.01	±0.2	%/V
ΔVR_{OUT}	Load Regulation	1mA ≤ I_{OUT} ≤ 100mA, V_{IN} = 5.3V		15	50	mV
PSRR	Power Supply Rejection	V_{IN} = 4.3V+ 0.5Vp-pAC, F= 1KHz I_{OUT} = 50mA		55		dB
V_{EH}	EN Input Threshold	Output ON	1.6			V
V_{EL}		Output OFF			0.25	V
I_{EN}	Enable Pin Current		-0.1		0.1	µA
V_{DF}	Detect fall voltage		3.83	3.91	3.98	V
$V_{Hysteresis}$	V_D Hysteresis Range		V_{DF} x1.02	V_{DF} x1.05	V_{DF} x1.08	V
IVD_{OUT}	VD Supply Current	VD_{OUT} = 0.5V V_{IN} = 2.0V 3.0V		 20 30		mA
t_{RP}	V_{DOUT} Delay Time	V_{IN} = 1.8V to VDF+ 1V	10	20	40	mSec
θ_{JA}	Thermal Resistance Junction to Ambient	SOP-8L (Note 2)		134		°C/W
θ_{JC}	Thermal Resistance Junction to Case	SOP-8L (Note 2)		28		°C/W

NOT RECOMMENDED FOR NEW DESIGN

Notes: 2. Test conditions for SOP-8L: Devices mounted on FR-4 PC board, MRP, 2oz copper layout, calibrate at T_J=150 °C, measure at T_A=25°C, minimum recommended pad layout

© 2025 Copyright Diodes Incorporated. All Rights Reserved.

Typical Performance Characteristics

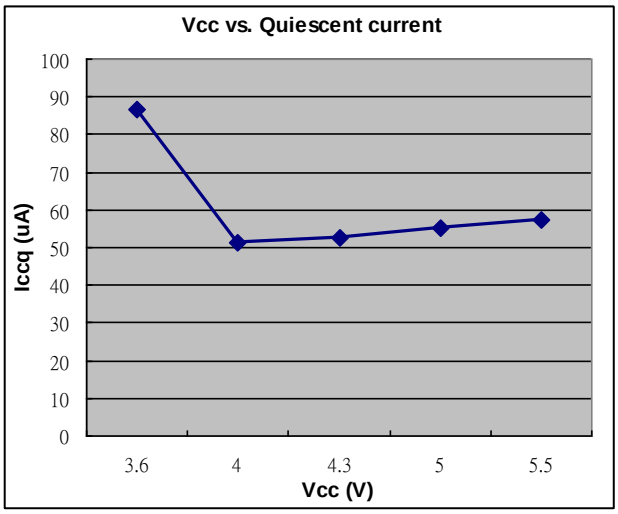

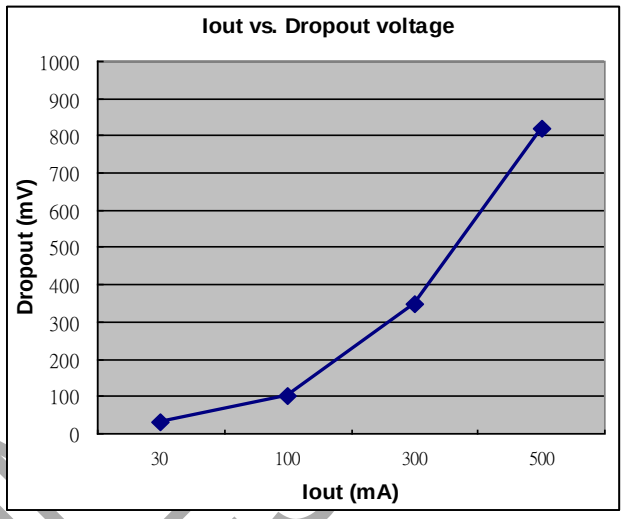

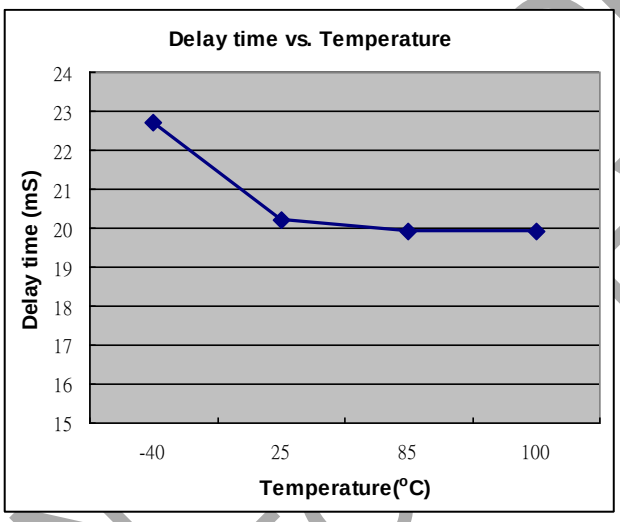

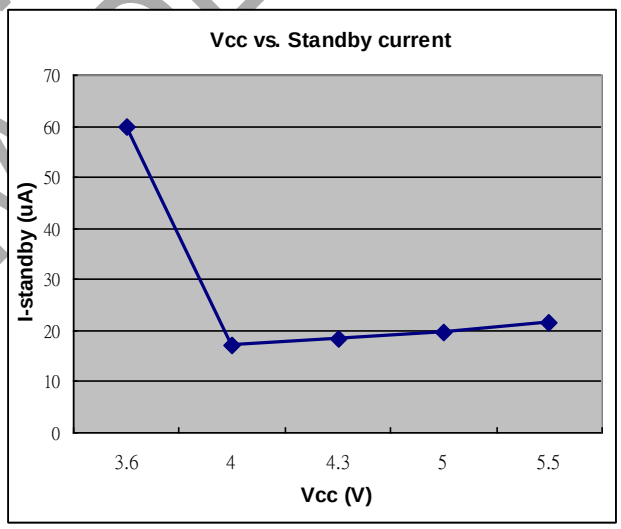

NOT FOR NEW DESIGNS

© 2025 Copyright Diodes Incorporated. All Rights Reserved.

Typical Performance Characteristics (Continued)

Load Transient Response (V_{IN}=4.3V, I_{OUT}=0~500mA)

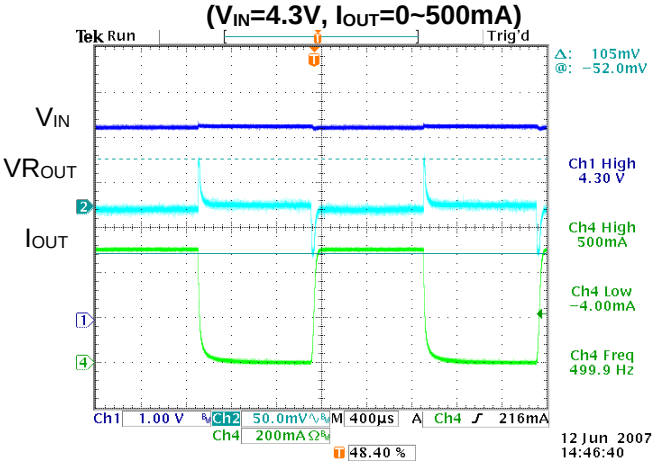

Load Transient Response (V_{IN}=5.5V, I_{OUT}=0~500mA)

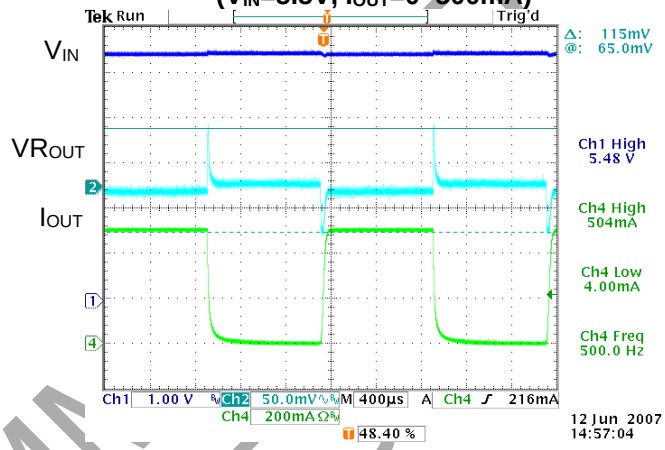

Load Transient Response (V_{IN}=4.3V, I_{OUT}=100~300mA)

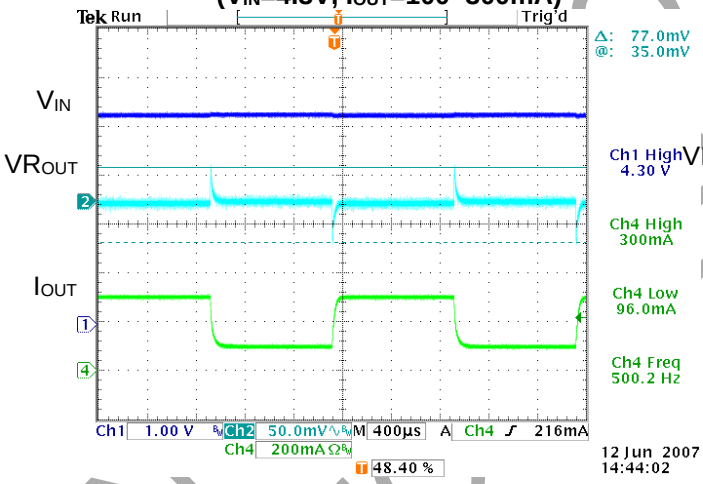

Load Transient Response (V_{IN}=5.5V, I_{OUT}=100~300mA)

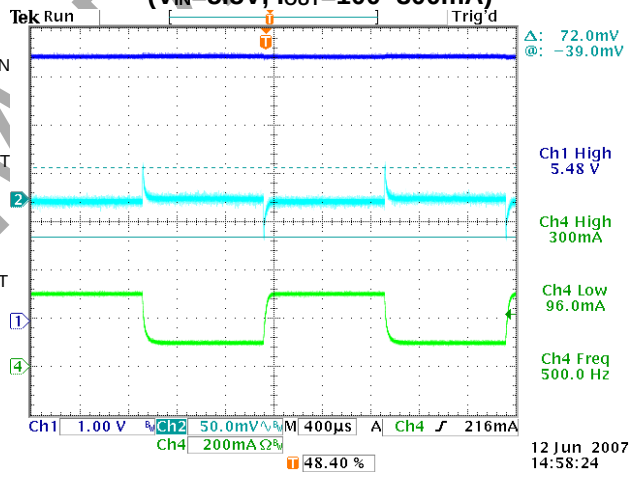

NOT FOR NEW DESIGNS

© 2025 Copyright Diodes Incorporated. All Rights Reserved.

Timing Diagram

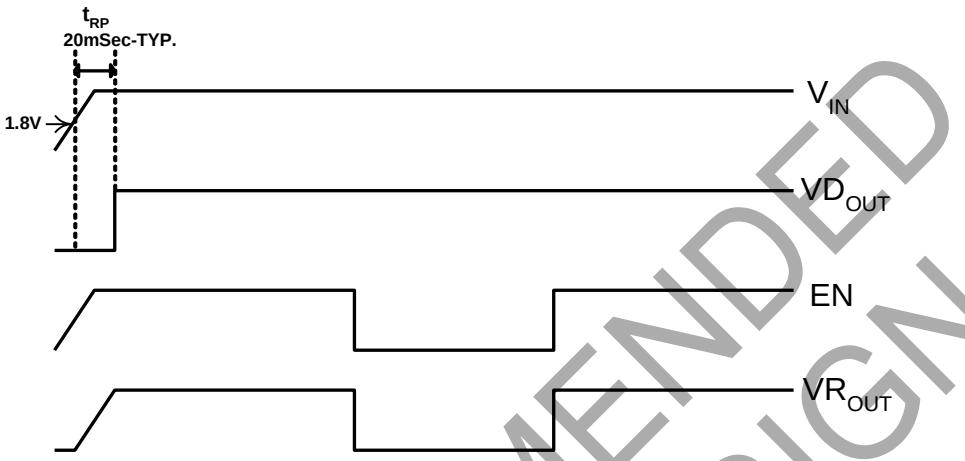

Application Note

Input Capacitor

A 1μF ceramic capacitor is recommended to connect between IN and GND pins to decouple input power supply glitch and noise. The amount of the capacitance may be increased without limit. A lower ESR (Equivalent Series Resistance) capacitor allows the use of less capacitance, while higher ESR type requires more capacitance. This input capacitor must be located as close as possible to the device to assure input stability and less noise. For PCB layout, a wide copper trace is required for both IN and GND.

Output Capacitor

The output capacitor is required to stabilize and help the transient response of the LDO. The AP7217 is designed to have excellent transient response for most applications with a small amount of output capacitance. The AP7217 is stable with any small ceramic output capacitors of 1.0μF or higher value, and the temperature coefficients of X7R or X5R type. Additional capacitance helps to reduce undershoot and overshoot during transient. For PCB layout, the output capacitor must be placed as close as possible to OUT and GND pins, and keep the leads as short as possible.

ENABLE/SHUTDOWN Operation

The AP7217 is turned on by setting the EN pin high, and is turned off by pulling it low. If this feature is not used, the EN pin should be tied to IN pin to keep the regulator output on at all time. To ensure proper operation, the signal source used to drive the EN pin must be able to swing above and below the specified turn-on/off voltage thresholds listed in the Electrical Characteristics section under V_{IL} and V_{IH}.

	VROUT	VDOUT
EN=0	0V	*Φ*
EN=1	3.3V	*Φ*

Current Limit Protection

When output current at OUT pin is higher than current limit threshold, the current limit protection will be triggered and clamp the output current to approximately 600mA to prevent over-current and to protect the regulator from damage due to overheating.

NOT RECOMMENDED FOR NEW DESIGN

© 2025 Copyright Diodes Incorporated. All Rights Reserved.

Application Note

Short circuit protection
When VRout pin is shorted to GND or VRout voltage is less than 200mV, short circuit protection will be triggered and clamp the output current to approximately 50mA.

VD_{OUT} (reset output)
---Open-Drain Active-Low reset output---
In general, VD_{OUT} is pulled up by a resistor (100Kohm) to V_{IN}. The AP7217 microprocess (uP) supervisory circuitry asserts a guaranteed logic-low reset during power-up and power-down. Reset is asserted asserts when V_{IN} is below the reset threshold and remain asserted for at least t_{RP} after V_{IN} rises above the reset threshold.
As long as V_{IN} is lower than the reset threshold, VD_{OUT} remains at logic "0". When V_{IN} become higher than V_{TH}, a logic "1" is asserted after a time delay defined by t_{RP}.

Ordering Information

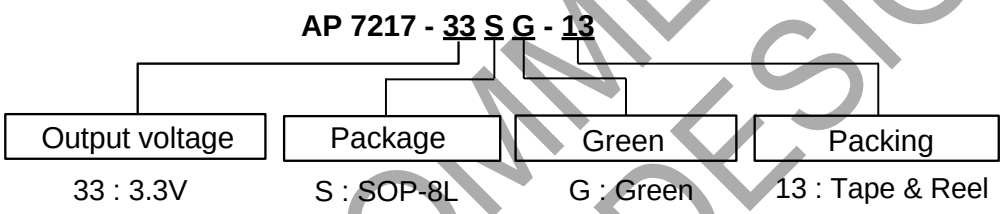

Device	Package Code	Packaging (Note 3)	13" Tape and Reel	
			Quantity	Part Number Suffix
AP7217-33SG-13	S	SOP-8L	2500/Tape & Reel	-13

Notes: 3. Pad layout as shown on Diodes Inc. suggested pad layout document AP02001, which can be found on our website at http://www.diodes.com/datasheets/ap02001.pdf.

Marking Information

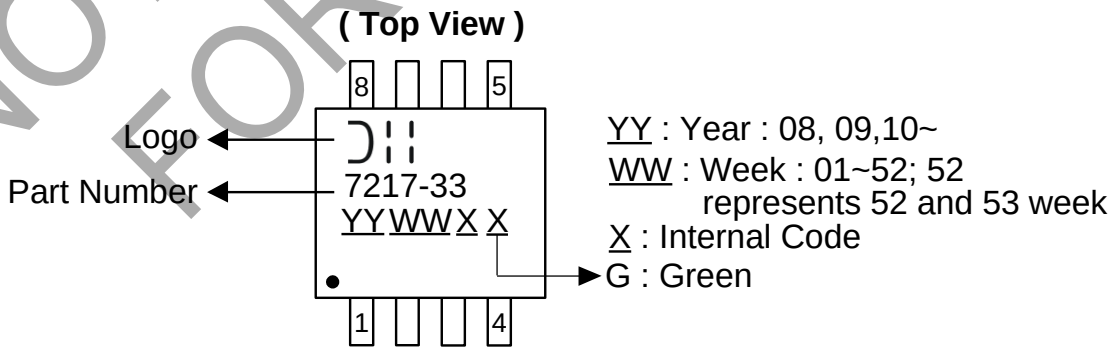

NOT RECOMMENDED FOR NEW DESIGN

© 2025 Copyright Diodes Incorporated. All Rights Reserved.

Package Outline Dimensions (All Dimensions in mm)

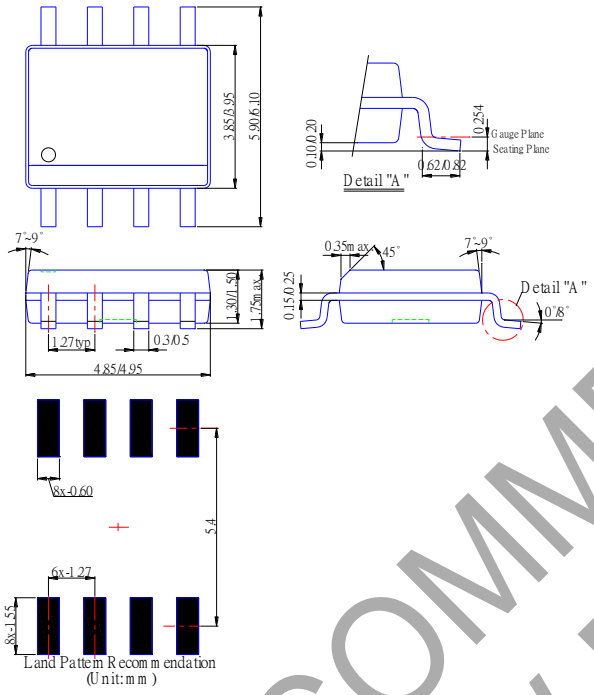

NOT RECOMMENDED FOR NEW DESIGN

© 2025 Copyright Diodes Incorporated. All Rights Reserved.

IMPORTANT NOTICE

1. DIODES INCORPORATED (Diodes) AND ITS SUBSIDIARIES MAKE NO WARRANTY OF ANY KIND, EXPRESS OR IMPLIED, WITH REGARDS TO ANY INFORMATION CONTAINED IN THIS DOCUMENT, INCLUDING, BUT NOT LIMITED TO, THE IMPLIED WARRANTIES OF MERCHANTABILITY, FITNESS FOR A PARTICULAR PURPOSE OR NON-INFRINGEMENT OF THIRD PARTY INTELLECTUAL PROPERTY RIGHTS (AND THEIR EQUIVALENTS UNDER THE LAWS OF ANY JURISDICTION).

2. The Information contained herein is for informational purpose only and is provided only to illustrate the operation of Diodes' products described herein and application examples. Diodes does not assume any liability arising out of the application or use of this document or any product described herein. This document is intended for skilled and technically trained engineering customers and users who design with Diodes' products. Diodes' products may be used to facilitate safety-related applications; however, in all instances customers and users are responsible for (a) selecting the appropriate Diodes products for their applications, (b) evaluating the suitability of Diodes' products for their intended applications, (c) ensuring their applications, which incorporate Diodes' products, comply the applicable legal and regulatory requirements as well as safety and functional-safety related standards, and (d) ensuring they design with appropriate safeguards (including testing, validation, quality control techniques, redundancy, malfunction prevention, and appropriate treatment for aging degradation) to minimize the risks associated with their applications.

3. Diodes assumes no liability for any application-related information, support, assistance or feedback that may be provided by Diodes from time to time. Any customer or user of this document or products described herein will assume all risks and liabilities associated with such use, and will hold Diodes and all companies whose products are represented herein or on Diodes' websites, harmless against all damages and liabilities.

4. Products described herein may be covered by one or more United States, international or foreign patents and pending patent applications. Product names and markings noted herein may also be covered by one or more United States, international or foreign trademarks and trademark applications. Diodes does not convey any license under any of its intellectual property rights or the rights of any third parties (including third parties whose products and services may be described in this document or on Diodes' website) under this document.

5. Diodes' products are provided subject to Diodes' Standard Terms and Conditions of Sale (https://www.diodes.com/about/company/terms-and-conditions/terms-and-conditions-of-sales/) or other applicable terms. This document does not alter or expand the applicable warranties provided by Diodes. Diodes does not warrant or accept any liability whatsoever in respect of any products purchased through unauthorized sales channel.

6. Diodes' products and technology may not be used for or incorporated into any products or systems whose manufacture, use or sale is prohibited under any applicable laws and regulations. Should customers or users use Diodes' products in contravention of any applicable laws or regulations, or for any unintended or unauthorized application, customers and users will (a) be solely responsible for any damages, losses or penalties arising in connection therewith or as a result thereof, and (b) indemnify and hold Diodes and its representatives and agents harmless against any and all claims, damages, expenses, and attorney fees arising out of, directly or indirectly, any claim relating to any noncompliance with the applicable laws and regulations, as well as any unintended or unauthorized application.

7. While efforts have been made to ensure the information contained in this document is accurate, complete and current, it may contain technical inaccuracies, omissions and typographical errors. Diodes does not warrant that information contained in this document is error-free and Diodes is under no obligation to update or otherwise correct this information. Notwithstanding the foregoing, Diodes reserves the right to make modifications, enhancements, improvements, corrections or other changes without further notice to this document and any product described herein. This document is written in English but may be translated into multiple languages for reference. Only the English version of this document is the final and determinative format released by Diodes.

8. Any unauthorized copying, modification, distribution, transmission, display or other use of this document (or any portion hereof) is prohibited. Diodes assumes no responsibility for any losses incurred by the customers or users or any third parties arising from any such unauthorized use.

9. This Notice may be periodically updated with the most recent version available at https://www.diodes.com/about/company/terms-and-conditions/important-notice

The Diodes logo is a registered trademark of Diodes Incorporated in the United States and other countries.
All other trademarks are the property of their respective owners.
© 2025 Diodes Incorporated. All Rights Reserved.

www.diodes.com

NOT RECOMMENDED FOR NEW DESIGN

© 2025 Copyright Diodes Incorporated. All Rights Reserved.

ENTEGRECİ

Bu belge www.entegreci.com üzerinden sunulmaktadır.

Elektronik komponent tedarikinde Entegreci

Entegreci, Eskişehir merkezli, Türkiye geneline satış yapan bir elektronik komponent mağazasıdır. Entegreler (IC), mikrodenetleyiciler, transistörler, diyotlar, pasif elemanlar, konnektörler, modüller ve geliştirme kartları tek adetten seri üretim adetlerine kadar satılır. Ürün sayfalarında güncel stok durumunu, fiyatı ve datasheet bağlantısını bulabilirsiniz.

Parça koduyla arama

Üretici parça numarasını yazın; stok ve fiyatı hemen görün.

www.entegreci.com

Ürün kategorileri

Entegreden kapasitöre tüm elektronik komponent kategorileri.

Kategorilere göz atın

Üreticiler

Aradığınız üreticinin ürünlerini tek sayfada inceleyin.

Üreticileri görün

Toplu alım ve teklif

Listede olmayan ya da yüksek adetli parçalar için teklif isteyin.

Teklif isteyin

www.entegreci.com | **destek@entegreci.com** | **0850 305 90 34**

Entegreci is an online electronic components store based in Türkiye. Search by manufacturer part number to see stock, prices and datasheets for integrated circuits, microcontrollers, transistors, passive components and connectors, or request a quote for parts that are not listed.

Bu sayfa Entegreci tarafından eklenmiştir. Belgenin önceki sayfaları asıl yayıncısına aittir ve içeriği değiştirilmemiştir; en güncel sürüm için belgenin yayıncısına başvurun.