# AUTOMOTIVE COMPLIANT 150mA HIGH PSRR LOW NOISE LDO WITH ENABLE

## Description

The AP7315Q is a low dropout regulator with high output voltage accuracy, low $R_{DS(ON)}$, high PSRR, low output noise, and low quiescent current. This regulator is based on a CMOS process.

The AP7315Q is available with fixed output voltage variants with an enable input to turn it on and off. It is available with output discharge (AP7315DQ) and without (AP7315Q) output discharge function.

With its low power consumption and line and load transient responses, the AP7315Q is well suited for noise sensitive automotive applications.

The AP7315Q is qualified to AEC-Q100 Grade 1 in SOT25 and is Automotive Compliant, supporting PPAPs.

## Pin Assignments

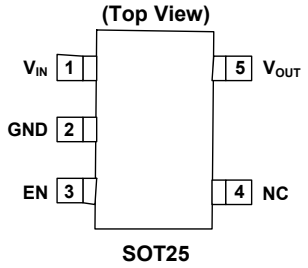


## Features

- Wide $V_{IN}$ Range: 1.7V to 5.25V
- -40°C to +125°C Temperature Range
- Guarantee Output Current,150mA
- $V_{OUT}$ Accuracy ±1%
- Ripple Rejection 75dB at 1kHz
- Low Output Noise, 60μVrms from 10Hz to 100kHz
- Quiescent Current as Low as 35μA
- $V_{OUT}$ Fixed 1.1V to 3.3V
- Moisture Sensitivity: Level 1 Per J-STD-020
- Terminals: Finish - Matte Tin Plated Leads, Solderable per MIL-STD-202, Method 208 e3
- Weight: 0.016 grams (Approximate)
- **Totally Lead-Free & Fully RoHS Compliant (Notes 1 & 2)**
- **Halogen- and Antimony-Free, Green Device (Note 3)**
- **The AP7315Q is suitable for automotive applications requiring specific change control; this part is AEC-Q100 qualified, PPAP capable, and manufactured in IATF 16949 certified facilities.**
  **https://www.diodes.com/quality/product-definitions/**

## Applications

- Infotainment Power Supplies
- Automotive RF Supply
- Cameras
- Automotive POL in ADAS
- Automotive Wireless Communication

Notes:
1. No purposely added lead. Fully EU Directive 2002/95/EC (RoHS), 2011/65/EU (RoHS 2) & 2015/863/EU (RoHS 3) compliant.
2. See https://www.diodes.com/quality/lead-free/ for more information about Diodes Incorporated's definitions of Halogen- and Antimony-free, "Green" and Lead-free.
3. Halogen- and Antimony-free "Green" products are defined as those which contain <900ppm bromine, <900ppm chlorine (<1500ppm total Br + Cl) and <1000ppm antimony compounds .

## Typical Applications Circuit

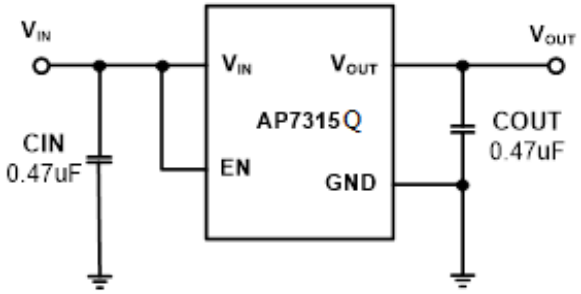



© Diodes Incorporated

## Pin Descriptions

| Pin Number | Pin Name | Function |
|---|---|---|
| 1 | $V_{IN}$ | Power Input Pin |
| 2 | GND | Ground |
| 3 | EN | Enable Pin<br>This pin should be driven either high or low and must not be floating.<br>Driving this pin high enables the regulator, and pulling it low puts the regulator into shutdown mode. |
| 4 | NC | No Connection |
| 5 | $V_{OUT}$ | Power Output Pin |

## Functional Block Diagram

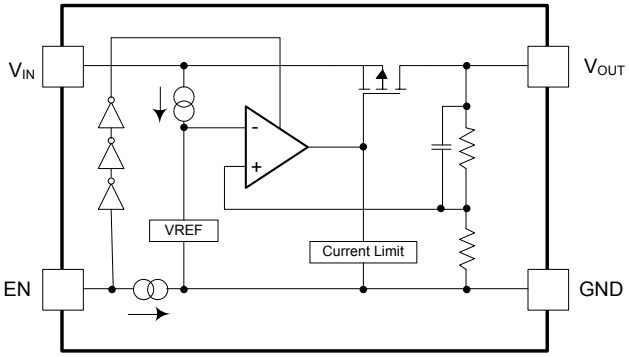


**AP7315Q (Non Discharge)**

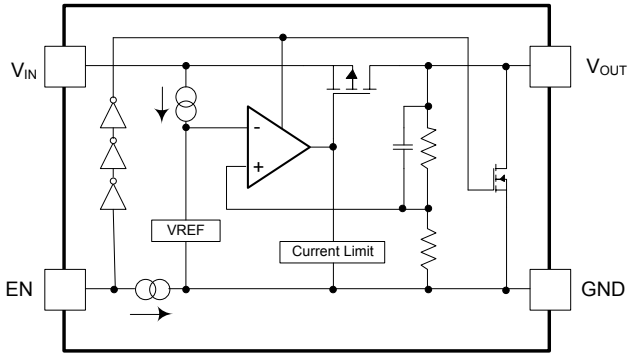


**AP7315DQ (With Discharge)**

## Absolute Maximum Ratings (Note 4) (@ $T_A$ = +25°C, unless otherwise specified.)

| Symbol | Parameter | Ratings | Unit |
|---|---|---|---|
| ESD HBM | Human Body Mode ESD Protection | >2 | KV |
| ESD CDM | Charge Device Model | ±500 | V |
| $V_{IN}$ | Input Voltage | 6.0 | V |
| $V_{EN}$ | Input Voltage EN | 6.0 | V |
| $V_{OUT}$ | Output Voltage | -0.3 to $V_{IN}$ +0.3 | V |
| $I_{OUT}$ | Output Current | 300 | mA |
| $P_D$ | Power Dissipation | 400 | mW |
| $T_J$ | Operating Junction Temperature | -40 to +150 | °C |
| $T_{STG}$ | Storage Temperature | -55 to +150 | °C |

Note: 4. a) Stresses beyond those listed under *Absolute Maximum Ratings* can cause permanent damage to the device. These are stress ratings only and functional operation of the device at these conditions is not implied. Exposure to absolute-maximum-rated conditions for extended periods can affect device reliability.
b). Ratings apply to ambient temperature at +25°C. The JEDEC High-K board design used to derive this data is a 2in. × 2in. multilayer board with 1oz. internal power and ground planes and 2oz. copper traces on the top and bottom of the board.


© Diodes Incorporated

## Recommended Operating Conditions (@ $T_A$ = +25°C, unless otherwise specified.)

| Symbol | Parameter | Min | Max | Unit |
|---|---|---|---|---|
| $V_{IN}$ | Input Voltage Range | 1.7 | 5.25 | V |
| $I_{OUT}$ | Output Current | 0 | 150 | mA |
| $T_J$ | Operating Junction Temperature | -40 | +125 | °C |
| $T_A$ | Operating Ambient Temperature (Note 5) | -40 | +125 | °C |

Note: 5. Ambient temperature range is subject to the junction temperature not exceeding 125°C.

## Electrical Characteristics

(@ $T_A$ = +25°C, unless otherwise specified. $V_{EN}$ = $V_{IN}$ = $V_{OUT}$ +1.0V, $C_{IN}$ = $C_{OUT}$ = 0.47µF, $I_{OUT}$ = 1.0mA)

| Parameter | Conditions | | Min | Typ | Max | Units |
|---|---|---|---|---|---|---|
| Output Voltage Accuracy (Note 6) | $V_{OUT}$ ≥ 2.0V, $V_{IN}$ = $V_{OUT}$+1V, $T_A$ = +25°C | | $V_{OUT}$ × 0.99 | $V_{OUT}$ | $V_{OUT}$ × 1.01 | V |
| | $V_{OUT}$ < 2.0V, $V_{IN}$ = $V_{OUT}$+1V, $T_A$ = +25°C | | $V_{OUT}$ -20mV | $V_{OUT}$ | $V_{OUT}$ + 20mV | V |
| Line Regulation ($dV_{OUT}/dV_{IN}/V_{OUT}$) | $V_{IN}$ = ($V_{OUT\ -\ Nom}$ + 1.0V) to 5.25V, $I_{OUT}$ = 1.0mA | | — | 0.02 | 0.1 | %/V |
| Load Regulation ($dV_{OUT}/V_{OUT}/dI_{OUT}$) | $V_{IN}$ = $V_{OUT\ -\ Nom}$ + 1.0V, $I_{OUT}$ = 1mA to 150mA | | — | 0.5 | 1.0 | %/A |
| Quiescent Current (Note 7) | $I_{OUT}$ = 0mA | | 20 | 35 | 60 | µA |
| | $I_{OUT}$ = 150mA | | 30 | 60 | 100 | |
| $I_{STANDBY}$ | $V_{EN}$ = 0V (Disabled) | | — | 0.01 | 1.0 | µA |
| Output Current | — | | 150 | — | — | mA |
| Fold-back Short Current (Note 8) | $V_{OUT}$ Short to Ground | | — | 55 | — | mA |
| PSRR (Note 9) | $V_{IN}$ = ($V_{OUT}$+1V)$V_{DC}$ + 0.2$V_{p-pAC}$, $V_{OUT}$ ≥ 1.8V, $I_{OUT}$ = 30mA | f = 1kHz | — | 75 | — | dB |
| Output Noise Voltage (Notes 9, 10) | BW = 10Hz to 100kHz, $I_{OUT}$ = 30mA | | — | 60 | — | µVrms |
| Dropout Voltage (Note 11) | $I_{OUT}$ = 150mA | 1.1V ≤ $V_{OUT}$ < 1.5V | — | 0.50 | 0.64 | V |
| | | 1.5V ≤ $V_{OUT}$ < 1.7V | — | 0.38 | 0.49 | |
| | | 1.7V ≤ $V_{OUT}$ < 2.0V | — | 0.34 | 0.44 | |
| | | 2.0V ≤ $V_{OUT}$ < 2.5V | — | 0.28 | 0.38 | |
| | | 2.5V ≤ $V_{OUT}$ < 2.8V | — | 0.22 | 0.32 | |
| | | 2.8V ≤ $V_{OUT}$ ≤ 3.3V | — | 0.21 | 0.29 | |
| Output Voltage Temperature Coefficient | $I_{OUT}$ = 30mA, $T_A$ = -40°C to +85°C | | — | ±30 | — | ppm/°C |
| EN Input Low Voltage | — | | 0 | — | 0.5 | V |
| EN Input High Voltage | — | | 1.3 | — | 5.25 | V |
| EN Input Leakage | $V_{EN}$ = 0, $V_{IN}$ = 5.0V or $V_{EN}$ = 5.0V, $V_{IN}$ = 0V | | -1.0 | — | +1.0 | µA |
| On Resistance of N-channel for Auto-Discharge (Note 12) | $V_{IN}$ = 4.0V $V_{EN}$ = 0V (Disabled) | | — | 30 | — | Ω |
| Thermal Resistance (Note 13) Junction to Ambient ($\Theta_{JA}$) | — | | — | 179 | — | °C/W |
| Junction to Case ($\Theta_{JC}$) | — | | — | 52 | — | |

Notes: 6. Potential multiple grades based on following output voltage accuracy.
7. Quiescent current is defined here is the difference in current between the input and the output.
8. Short circuit current is measured with $V_{OUT}$ pulled to GND.
9. This specification is guaranteed by design.
10. To make sure lowest environment noise minimizes the influence on noise measurement.
11. Dropout voltage is the voltage difference between the input and the output at which the output voltage drops 2% below its nominal value
12. AP7315Q has 2 options for output, built-in discharge and non-discharge.
13. Thermal impedances measured on PCB of type and size with which top layer and bottom layer metal coverage


© Diodes Incorporated

## Typical Characteristics

**Output Voltage vs. Output Current**
AP7315Q-18

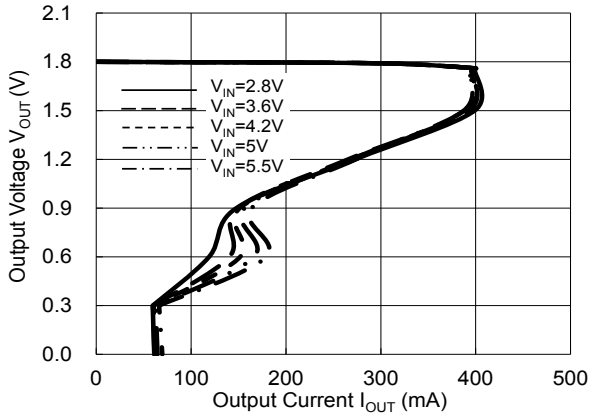


**Output Voltage vs. Output Current**
AP7315Q-25

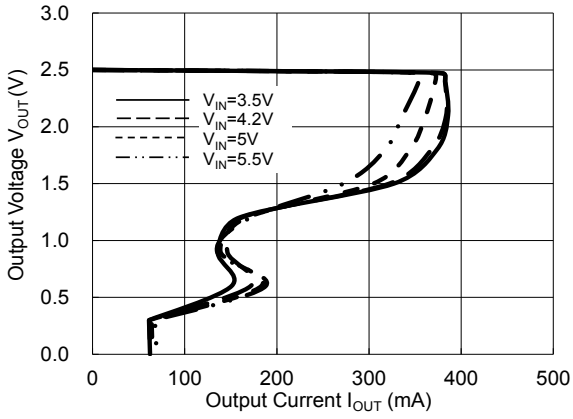


**Output Voltage vs. Output Current**
AP7315Q-33

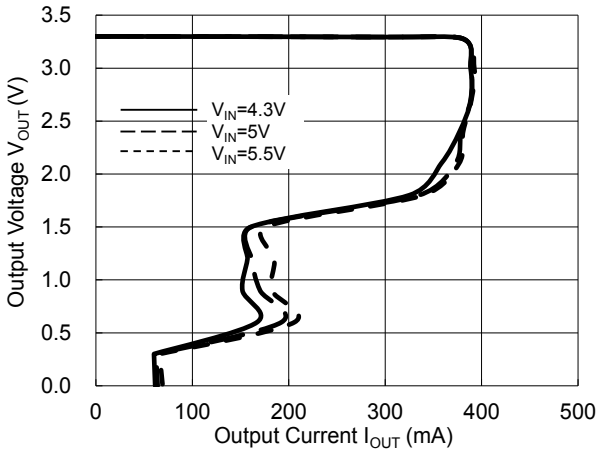


**Output Noise (AP7315Q-33)**

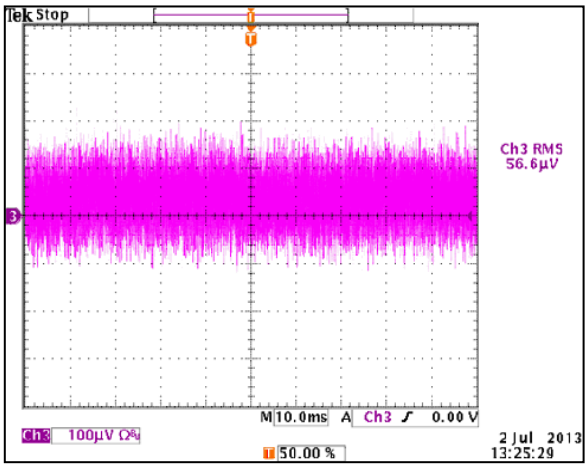


**Output Voltage vs. Intput Voltage**
AP7315Q- 25

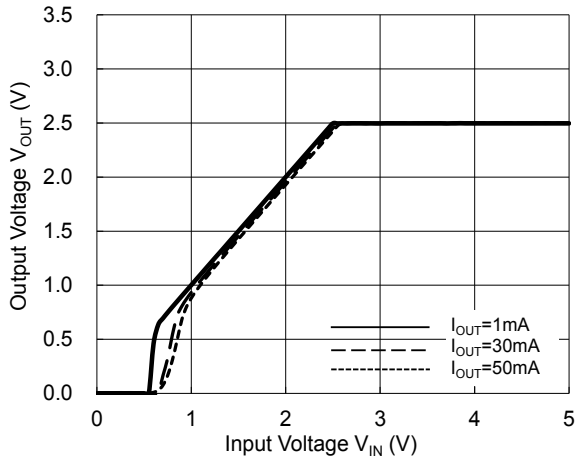


**Output Voltage vs. Intput Voltage**
AP7315Q- 33

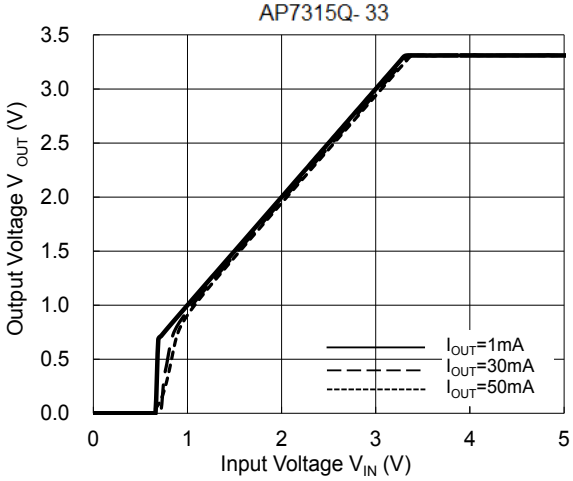



© Diodes Incorporated

## Typical Characteristics (continued)

**Supply Current vs. Input Voltage**
AP7315Q- 25

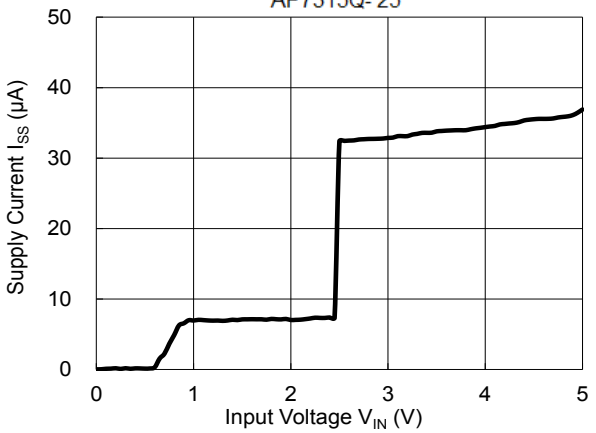


**Supply Current vs. Input Voltage**
AP7315Q- 33

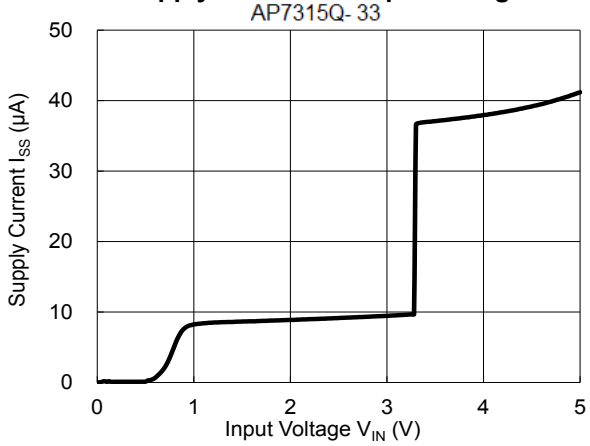


**OutVoltage Voltage vs Temperature**
AP7315Q-25

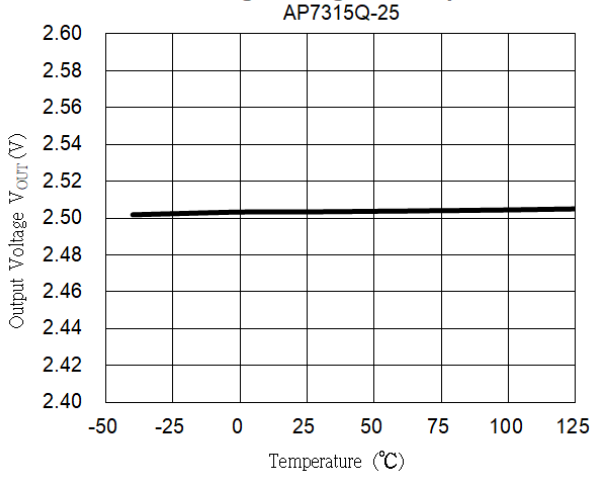


**OutVoltage Voltage vs Temperature**
AP7315Q-33

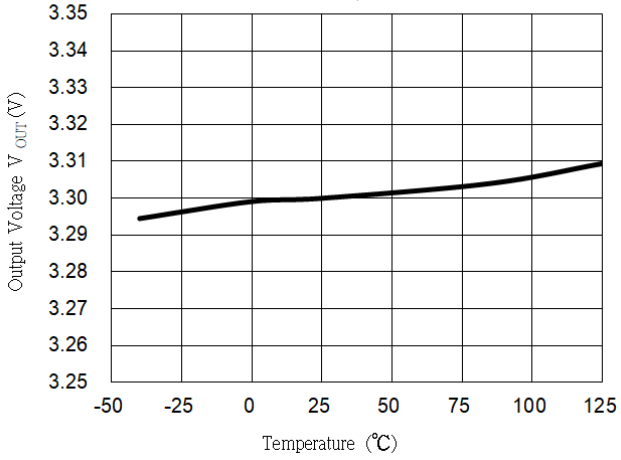


**Supply Current vs. Temperature**
AP7315Q-25

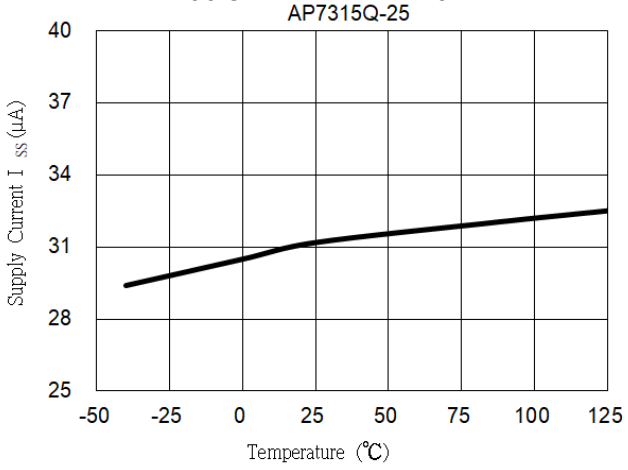


**Supply Current vs. Temperature**
AP7315Q-33

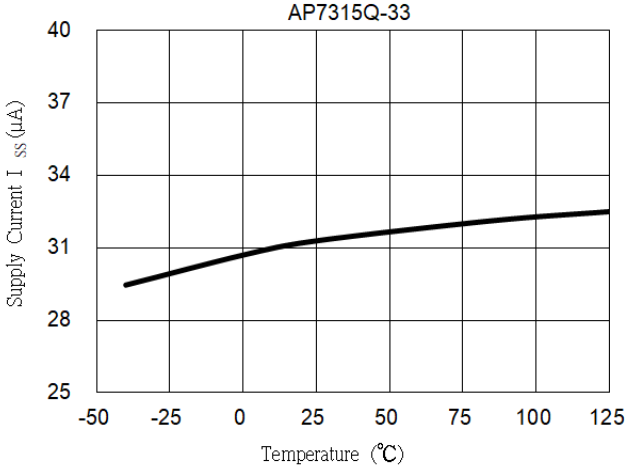



© Diodes Incorporated

## Typical Characteristics (cont.)

**Ripple Rejection vs. Frequency**

AP7315Q-18

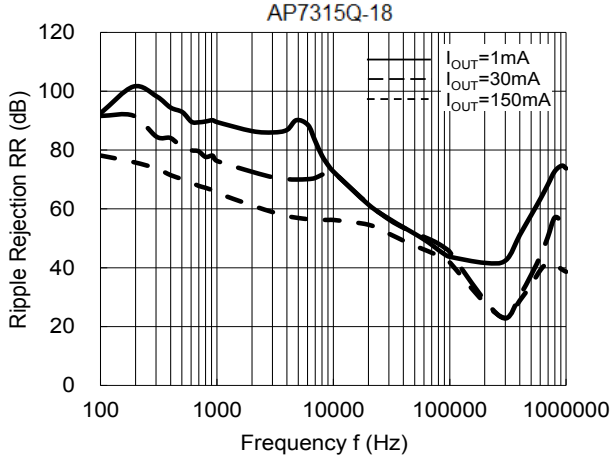


**Ripple Rejection vs. Frequency**

AP7315Q-25

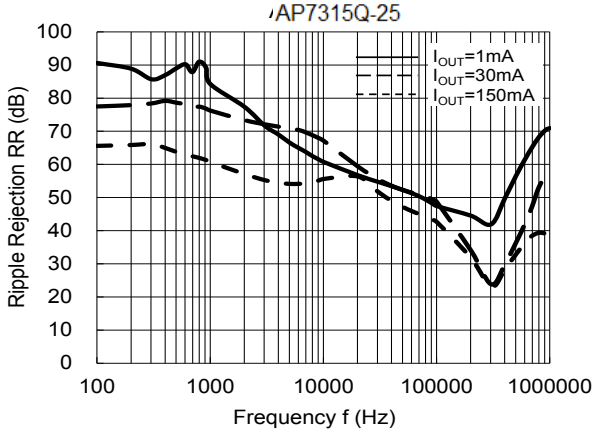


**Ripple Rejection vs. Frequency**

AP7315Q-33

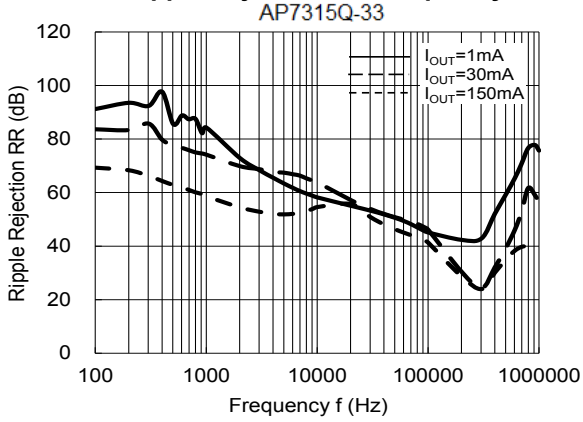


AP7315Q-25

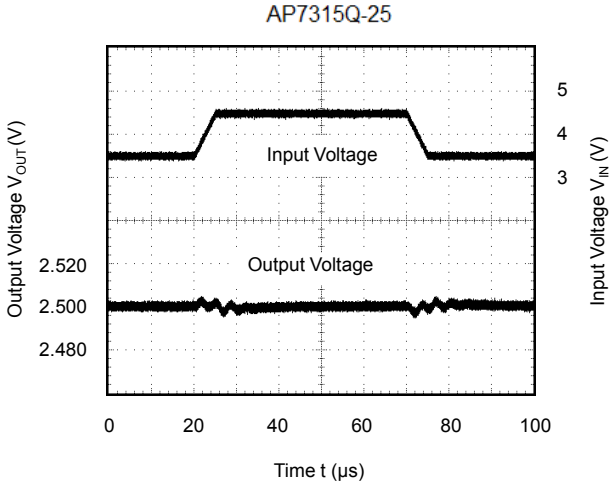


AP7315Q-33

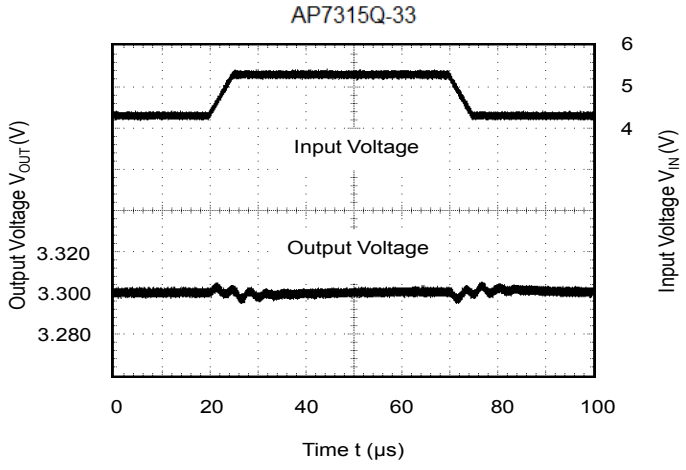



© Diodes Incorporated

## Typical Characteristics (cont.)

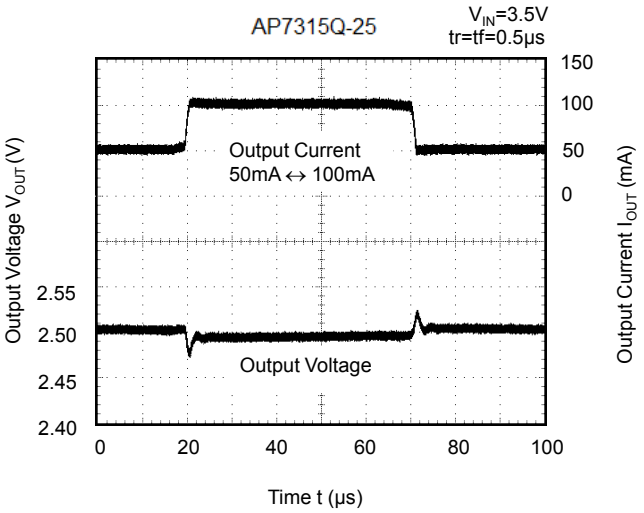


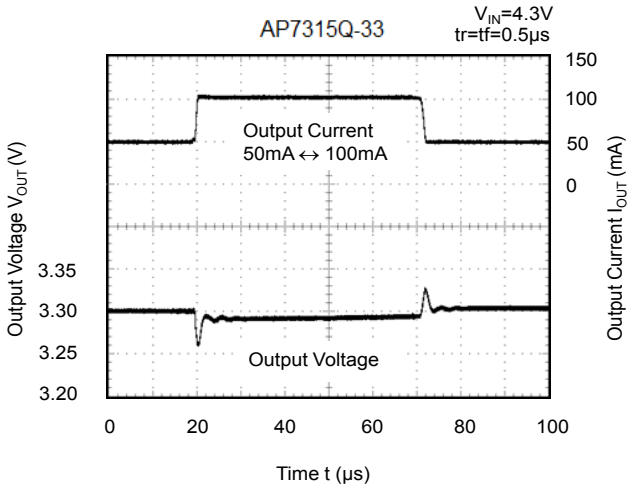


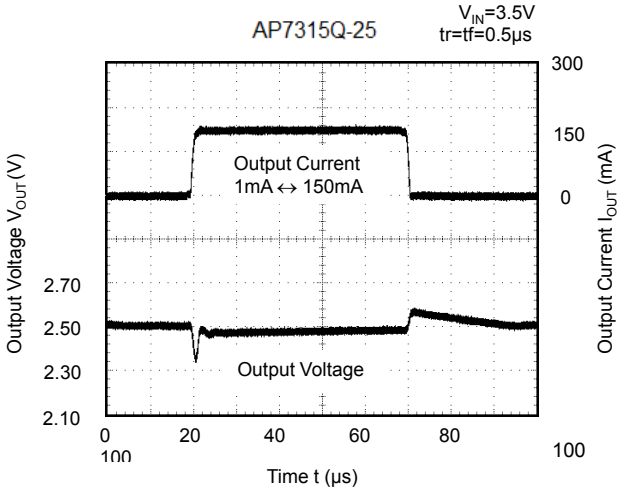


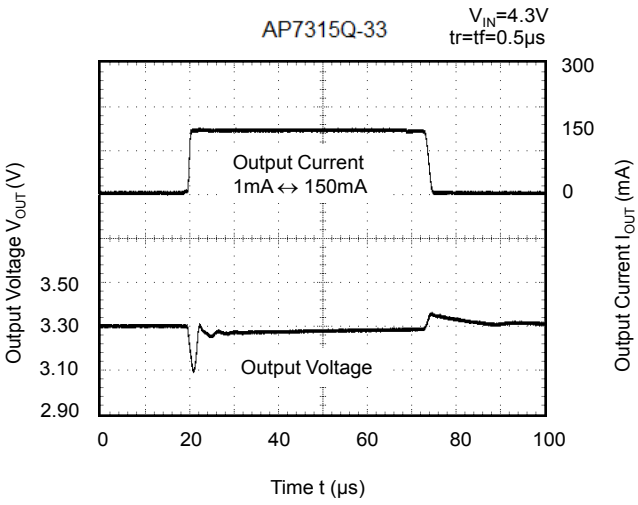


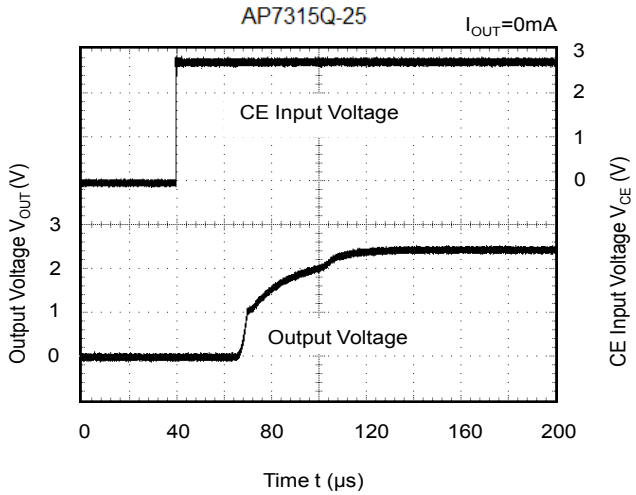


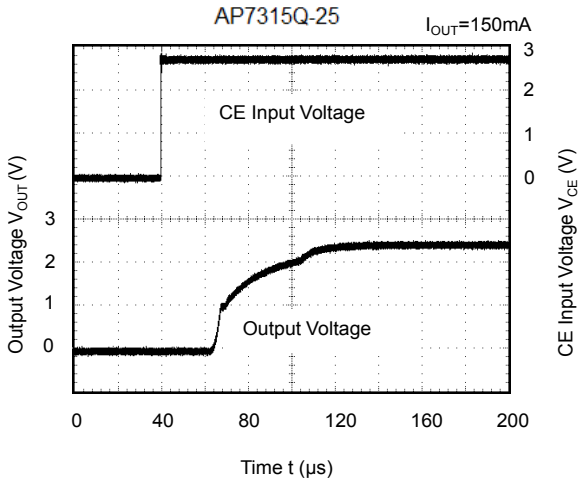



© Diodes Incorporated

## Typical Characteristics (cont.)

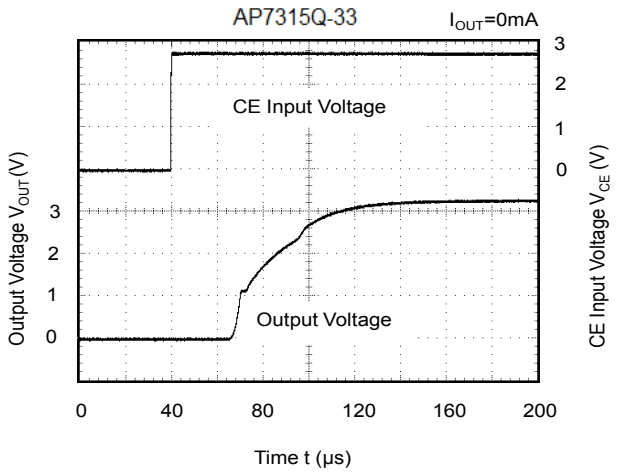


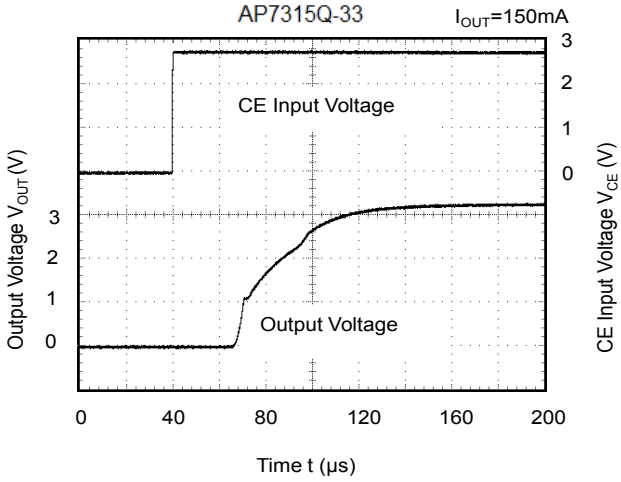


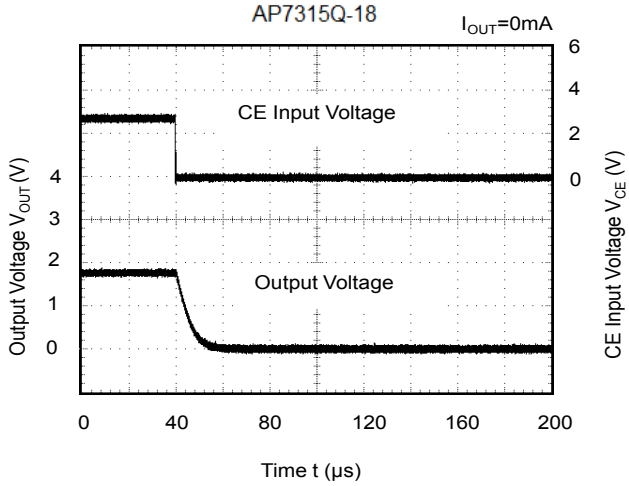


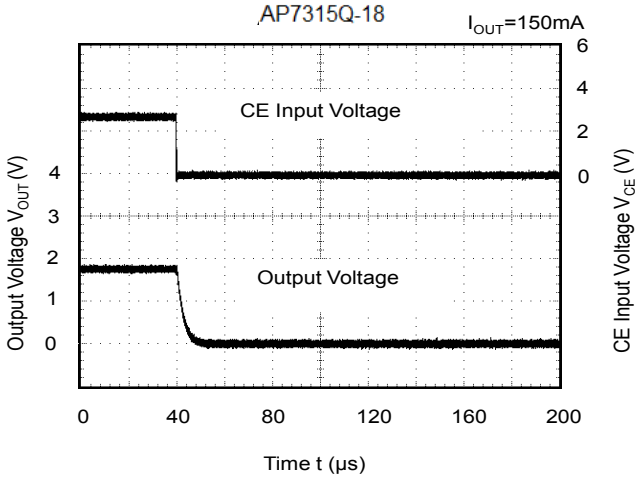


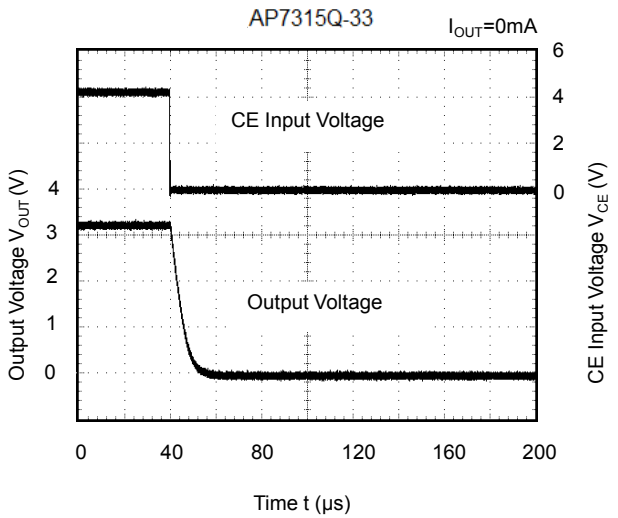


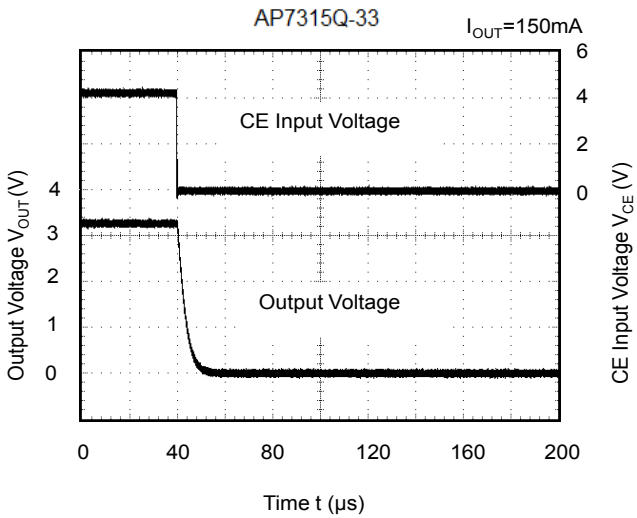



© Diodes Incorporated

## Application Information

**Output Capacitor**

An output capacitor ($C_{OUT}$) is required to improve transient response and maintain stability. The AP7315Q is stable with very small ceramic output capacitors. The ESR (equivalent series resistance) and capacitance drives the selection. If the application has large load variations, it is recommended to utilize low-ESR bulk capacitors. It is recommended to place ceramic capacitors as close as possible to the load and the ground pin. Care should be taken to reduce the impedance in the layout.

**Input Capacitor**

To prevent the input voltage from dropping during load steps, it is recommended to utilize an input capacitor ($C_{IN}$). A minimum 0.47µF ceramic capacitor is recommended between $V_{IN}$ and GND pins to decouple input power supply glitch. This input capacitor must be located as close as possible to the device to assure input stability and reduce noise. For PCB layout, a wide copper trace is required for both $V_{IN}$ and GND pins.

**Enable Control**

The AP7315Q is turned on by setting the EN pin high and is turned off by pulling it low. If this feature is not used, the EN pin should be tied to the $V_{IN}$ pin to keep the regulator output on at all time. To ensure proper operation, the signal source used to drive the EN pin must be able to swing above and below the specified turn-on/off voltage thresholds listed in the Electrical Characteristics section.

**Short Circuit Protection**

When $V_{OUT}$ pin is short-circuit-to-GND, short-circuit protection is triggered and clamp the output current to approximately 60mA. This feature protects the regulator from over-current and damage due to overheating.

**Layout Considerations**

For good ground loop and stability, the input and output capacitors should be located close to the $V_{IN}$, $V_{OUT}$, and GND pins of the device. The regulator GND pin should be connected to the external circuit ground to reduce voltage drop caused by trace impedance. Ground plane is generally used to reduce trace impedance. Wide trace should be used for large current paths from $V_{IN}$ to $V_{OUT}$, and load circuit.

## ESR vs. Output Current

A ceramic type output capacitor is recommended for this series; however, other output capacitors with low ESR may also be used. The relations between $I_{OUT}$ (Output Current) and ESR of an output capacitor are shown below. The stable region is marked as the hatched area in the graph.

Measurement Conditions:

Frequency Band: 10Hz to 2MHz, Temperature: -40°C to +125°C

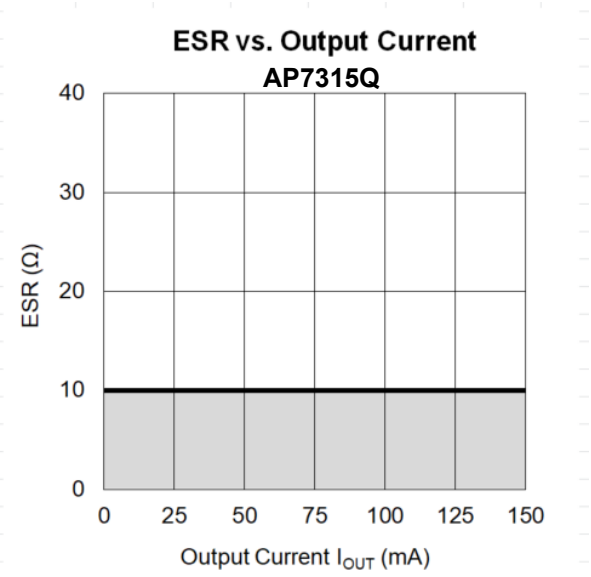



© Diodes Incorporated

## Ordering Information

**AP7315X Q - XXX XX - X**

| Output Discharge | Compliance | Output Voltage | Package | Packing |
|---|---|---|---|---|
| Blank : Non-discharge<br>D : Output Discharge | Q: Automotive Compliant | 11 : 1.1V<br>12 : 1.2V<br>15 : 1.5V<br>172 : 1.72V<br>18 : 1.8V<br>25 : 2.5V<br>28 : 2.8V<br>30 : 3.0V<br>33 : 3.3V | W5: SOT25 | 7 : Tape & Reel |

| Part Number (Note 15) | Compliance (Note 16) | Package Code | Packaging (Note 14) | 7" Tape and Reel | |
|---|---|---|---|---|---|
| | | | | Quantity | Part Number Suffix |
| AP7315Q-XXXW5-7 | Automotive Compliant | W5 | SOT25 | 3000/Tape & Reel | -7 |
| AP7315DQ-XXXW5-7 | Automotive Compliant | W5 | SOT25 | 3000/Tape & Reel | -7 |

Note:
14. For packaging details, go to our website at https://www.diodes.com/design/support/packaging/diodes-packaging/.
15. Other output voltage variants may be available in 100mV steps. For more information, please contact your local Diodes Sales representative.
16. AP7315Q and AP7315DQ are qualified to AEC-Q100 grade 1 and are classified as Automotive Compliant supporting PPAP documentation. Automotive Compliant and standard products are electrically and thermally the same, except where specified. For more information, please refer to http://www.diodes.com/quality/product_compliance_definitions/. See AP7315 datasheet for commercial qualified versions.

## Marking Information

**(Top View)**

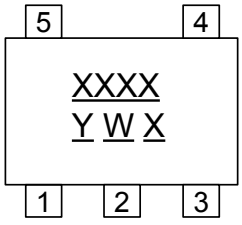


XXXX : Identification Code
Y : Year 0 to 9
W : Week : A to Z : 1 to 26 week;
a to z : 27 to 52 week; z represents 52 and 53 week
X : Internal Code

| Part Number | Package | Identification Code |
|---|---|---|
| AP7315Q-11W5-7 | SOT25 | 15AQ |
| AP7315Q-12W5-7 | SOT25 | 15BQ |
| AP7315Q-15W5-7 | SOT25 | 15DQ |
| AP7315Q-172W5-7 | SOT25 | 15XQ |
| AP7315Q-18W5-7 | SOT25 | 15EQ |
| AP7315Q-25W5-7 | SOT25 | 15JQ |
| AP7315Q-28W5-7 | SOT25 | 15MQ |
| AP7315Q-30W5-7 | SOT25 | 15RQ |
| AP7315Q-33W5-7 | SOT25 | 15UQ |
| AP7315DQ-11W5-7 | SOT25 | 5DAQ |
| AP7315DQ-12W5-7 | SOT25 | 5DBQ |
| AP7315DQ-15W5-7 | SOT25 | 5DDQ |
| AP7315DQ-172W5-7 | SOT25 | 5DYQ |
| AP7315DQ-18W5-7 | SOT25 | 5DEQ |
| AP7315DQ-25W5-7 | SOT25 | 5DJQ |
| AP7315DQ-28W5-7 | SOT25 | 5DMQ |
| AP7315DQ-30W5-7 | SOT25 | 5DSQ |
| AP7315DQ-33W5-7 | SOT25 | 5DVQ |


© Diodes Incorporated

## Package Outline Dimensions

Please see http://www.diodes.com/package-outlines.html for the latest version.

**SOT25**

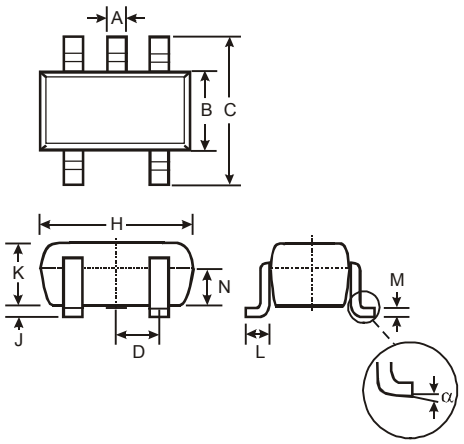


| SOT25 | | | |
|---|---|---|---|
| **Dim** | **Min** | **Max** | **Typ** |
| **A** | 0.35 | 0.50 | 0.38 |
| **B** | 1.50 | 1.70 | 1.60 |
| **C** | 2.70 | 3.00 | 2.80 |
| **D** | - | - | 0.95 |
| **H** | 2.90 | 3.10 | 3.00 |
| **J** | 0.013 | 0.10 | 0.05 |
| **K** | 1.00 | 1.30 | 1.10 |
| **L** | 0.35 | 0.55 | 0.40 |
| **M** | 0.10 | 0.20 | 0.15 |
| **N** | 0.70 | 0.80 | 0.75 |
| **α** | 0° | 8° | - |
| **All Dimensions in mm** | | | |

## Suggested Pad Layout

Please see http://www.diodes.com/package-outlines.html for the latest version.

**SOT25**

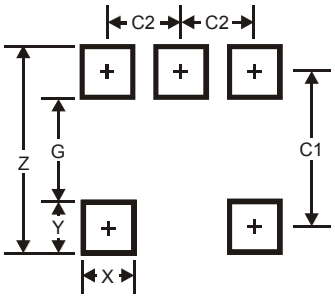


| Dimensions | Value |
|---|---|
| **Z** | 3.20 |
| **G** | 1.60 |
| **X** | 0.55 |
| **Y** | 0.80 |
| **C1** | 2.40 |
| **C2** | 0.95 |


© Diodes Incorporated

**IMPORTANT NOTICE**

1. DIODES INCORPORATED AND ITS SUBSIDIARIES ("DIODES") MAKE NO WARRANTY OF ANY KIND, EXPRESS OR IMPLIED, WITH REGARDS TO ANY INFORMATION CONTAINED IN THIS DOCUMENT, INCLUDING, BUT NOT LIMITED TO, THE IMPLIED WARRANTIES OF MERCHANTABILITY, FITNESS FOR A PARTICULAR PURPOSE OR NON-INFRINGEMENT OF THIRD PARTY INTELLECTUAL PROPERTY RIGHTS (AND THEIR EQUIVALENTS UNDER THE LAWS OF ANY JURISDICTION).

2. The Information contained herein is for informational purpose only and is provided only to illustrate the operation of Diodes products described herein and application examples. Diodes does not assume any liability arising out of the application or use of this document or any product described herein. This document is intended for skilled and technically trained engineering customers and users who design with Diodes products. Diodes products may be used to facilitate safety-related applications; however, in all instances customers and users are responsible for (a) selecting the appropriate Diodes products for their applications, (b) evaluating the suitability of the Diodes products for their intended applications, (c) ensuring their applications, which incorporate Diodes products, comply the applicable legal and regulatory requirements as well as safety and functional-safety related standards, and (d) ensuring they design with appropriate safeguards (including testing, validation, quality control techniques, redundancy, malfunction prevention, and appropriate treatment for aging degradation) to minimize the risks associated with their applications.

3. Diodes assumes no liability for any application-related information, support, assistance or feedback that may be provided by Diodes from time to time. Any customer or user of this document or products described herein will assume all risks and liabilities associated with such use, and will hold Diodes and all companies whose products are represented herein or on Diodes' websites, harmless against all damages and liabilities.

4. Products described herein may be covered by one or more United States, international or foreign patents and pending patent applications. Product names and markings noted herein may also be covered by one or more United States, international or foreign trademarks and trademark applications. Diodes does not convey any license under any of its intellectual property rights or the rights of any third parties (including third parties whose products and services may be described in this document or on Diodes' website) under this document.

5. Diodes products are provided subject to Diodes' Standard Terms and Conditions of Sale (https://www.diodes.com/about/company/terms-and-conditions/terms-and-conditions-of-sales/) or other applicable terms. This document does not alter or expand the applicable warranties provided by Diodes. Diodes does not warrant or accept any liability whatsoever in respect of any products purchased through unauthorized sales channel.

6. Diodes products and technology may not be used for or incorporated into any products or systems whose manufacture, use or sale is prohibited under any applicable laws and regulations. Should customers or users use Diodes products in contravention of any applicable laws or regulations, or for any unintended or unauthorized application, customers and users will (a) be solely responsible for any damages, losses or penalties arising in connection therewith or as a result thereof, and (b) indemnify and hold Diodes and its representatives and agents harmless against any and all claims, damages, expenses, and attorney fees arising out of, directly or indirectly, any claim relating to any noncompliance with the applicable laws and regulations, as well as any unintended or unauthorized application.

7. While efforts have been made to ensure the information contained in this document is accurate, complete and current, it may contain technical inaccuracies, omissions and typographical errors. Diodes does not warrant that information contained in this document is error-free and Diodes is under no obligation to update or otherwise correct this information. Notwithstanding the foregoing, Diodes reserves the right to make modifications, enhancements, improvements, corrections or other changes without further notice to this document and any product described herein. This document is written in English but may be translated into multiple languages for reference. Only the English version of this document is the final and determinative format released by Diodes.

8. Any unauthorized copying, modification, distribution, transmission, display or other use of this document (or any portion hereof) is prohibited. Diodes assumes no responsibility for any losses incurred by the customers or users or any third parties arising from any such unauthorized use.

Copyright © 2020 Diodes Incorporated

**www.diodes.com**

ENTEGRECİ

Bu belge www.entegreci.com üzerinden sunulmaktadır.

# Elektronik komponent tedarikinde Entegreci

Entegreci, Eskişehir merkezli, Türkiye geneline satış yapan bir elektronik komponent mağazasıdır. Entegreler (IC), mikrodenetleyiciler, transistörler, diyotlar, pasif elemanlar, konnektörler, modüller ve geliştirme kartları tek adetten seri üretim adetlerine kadar satılır. Ürün sayfalarında güncel stok durumunu, fiyatı ve datasheet bağlantısını bulabilirsiniz.

### Parça koduyla arama

Üretici parça numarasını yazın; stok ve fiyatı hemen görün.

**www.entegreci.com**

### Ürün kategorileri

Entegreden kapasitöre tüm elektronik komponent kategorileri.

**Kategorilere göz atın**

### Üreticiler

Aradığınız üreticinin ürünlerini tek sayfada inceleyin.

**Üreticileri görün**

### Toplu alım ve teklif

Listede olmayan ya da yüksek adetli parçalar için teklif isteyin.

**Teklif isteyin**

**www.entegreci.com** | **destek@entegreci.com** | **0850 305 90 34**

Entegreci is an online electronic components store based in Türkiye. Search by manufacturer part number to see stock, prices and datasheets for integrated circuits, microcontrollers, transistors, passive components and connectors, or request a quote for parts that are not listed.

Bu sayfa Entegreci tarafından eklenmiştir. Belgenin önceki sayfaları asıl yayıncısına aittir ve içeriği değiştirilmemiştir; en güncel sürüm için belgenin yayıncısına başvurun.