AP7333

300mA, Low Quiescent Current, Fast Transient Low Dropout Linear Regulator

Features

- 300mA Low Dropout Regulator in 3-pin package
- Very low I_Q over full load: 65µA
- Wide input voltage range: 2V to 6V
- Fixed output options: 1.0V to 3.3V
- PSRR: 65dB typical at 100Hz
- Fast start-up time: 80µs
- Stable with low ESR, 1µF ceramic output capacitor
- Excellent Load/Line Transient Response
- Low dropout: 300mV typical at 300mA
- Current limit protection
- Short circuit protection
- Thermal shutdown protection
- Ambient temperature range: -40ºC to 85°C
- SOT23 and SOT23R: Available in "Green" Molding Compound (No Br, Sb)
- Lead Free Finish/RoHS Compliant (Note 1)

Description

The AP7333 is a 300mA, fixed output voltage, low dropout linear regulator. The device included pass element, error amplifier, band-gap, current limit and thermal shutdown circuitry.

The characteristics of low dropout voltage and low quiescent current make it suitable for low power applications, for example, battery powered devices. The typical quiescent current is approximately 65µA.

Built-in current-limit and thermal-shutdown functions prevent IC from damage in fault conditions.

The AP7333 is available in SOT23 packages with different pin-outs.

Applications

- XDSL Router
- Wireless LAN Cards
- Desktop and Notebook Computers
- Battery Powered Equipments
- Mouse, Keyboards

Typical Application Circuit

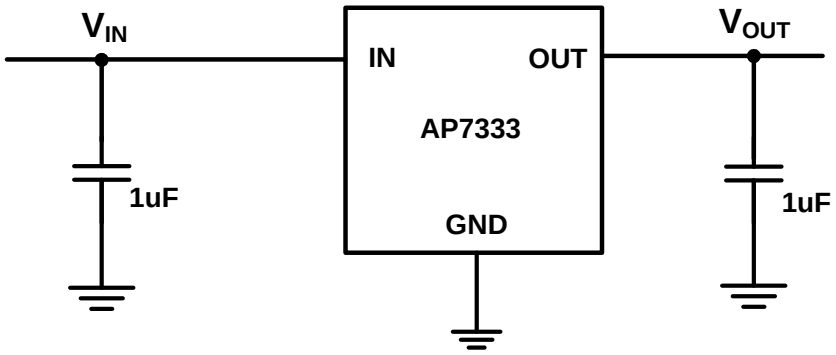

© Diodes Incorporated

Ordering Information

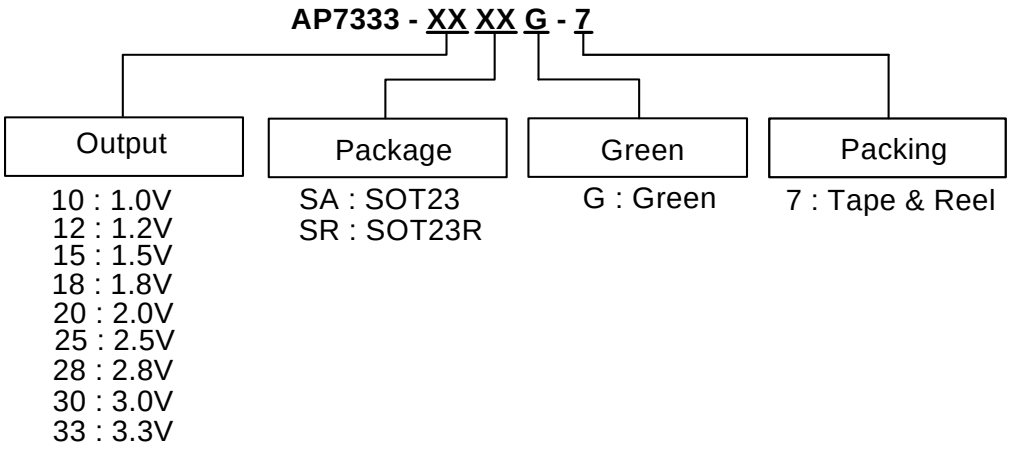

Device	Package Code	Packaging (Note 2)	7" Tape and Reel	
			Quantity	Part Number Suffix
AP7333-XXSAG-7	SA	SOT23	3000/Tape & Reel	-7
AP7333-XXSRG-7	SR	SOT23R	3000/Tape & Reel	-7

Notes: 1. EU Directive 2002/95/EC (RoHS). All applicable RoHS exemptions applied. Please visit our website at http://www.diodes.com/products/lead_free.html
2. Pad layout as shown on Diodes Inc. suggested pad layout document AP02001, which can be found on our website at http://www.diodes.com/datasheets/ap02001.pdf.

Pin Assignment

(1) SOT23

(Top View)

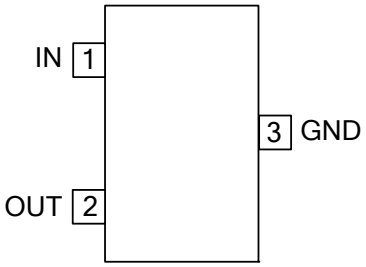

(1) SOT23R

(Top View)

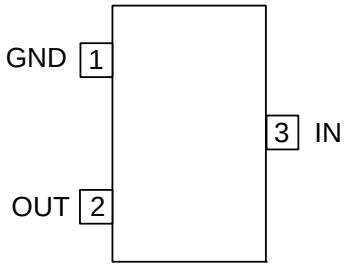

© Diodes Incorporated

Pin Descriptions

Pin Name	Pin Number		Description
	SOT23	SOT23R	
IN	1	3	Voltage input pin. Bypass to ground through at least 1µF capacitor
OUT	2	2	Voltage output pin. Bypass to ground through 1µF ceramic capacitor
GND	3	1	Ground

Functional Block Diagram

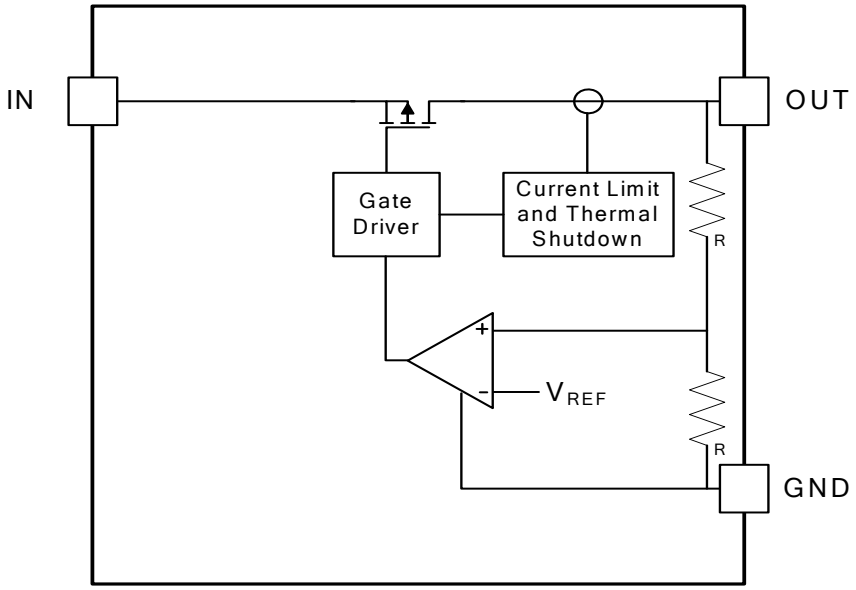

© Diodes Incorporated

Absolute Maximum Ratings

Symbol	Parameter		Ratings	Units
ESD HBM	Human Body Model ESD Protection		6	kV
ESD MM	Machine Model ESD Protection		400	V
V_{IN}	Input Voltage		7	V
	Continuous Load Current		Internal Limited	
T_{OP}	Operating Junction Temperature Range		-40 ~ 125	°C
T_{ST}	Storage Temperature Range		-65 ~150	°C
P_D	Power Dissipation (Note 3)	SOT23	600	mW
		SOT23R	540	mW
T_J	Maximum Junction Temperature		150	°C

Recommended Operating Conditions

Symbol	Parameter	Min	Max	Unit
V_{IN}	Input voltage	2	6	V
I_{OUT}	Output Current (Note 4)	0	300	mA
T_A	Operating Ambient Temperature	-40	85	°C

Notes: 3. Ratings apply to ambient temperature at 25°C
4. The device maintains a stable, regulated output voltage without a load current.

© Diodes Incorporated

Electrical Characteristics

(T_A = 25°C, V_{IN} = V_{OUT} +1V, C_{IN} = 1uF, C_{OUT} = 1uF, unless otherwise stated)

Symbol	Parameter	Test Conditions	Min	Typ.	Max	Unit
I_Q	Input Quiescent Current	I_{OUT} = 0mA	—	55	75	μA
		I_{OUT} = 300mA		65	85	
$V_{Dropout}$	Dropout Voltage (Note 5)	I_{OUT} = 300mA		300	550	mV
V_{OUT}	Output Voltage Accuracy	T_A = -40°C to 85°C, I_{OUT} = 30mA	-2		2	%
ΔV_{OUT} /ΔV_{IN}/V	Line Regulation	V_{IN} = (V_{OUT} +1V) to V_{IN-Max}, I_{OUT} = 1mA		0.01	0.20	%/V
ΔV_{OUT} /V_{OUT}	Load Regulation	V_{IN} = (V_{OUT} +1V) to V_{IN-Max}, I_{OUT} from 1mA to 300mA	-0.6		0.6	%
t_{ST}	Start-up Time	V_{IN} = 0V to 2.0V, V_{OUT} = 1V, I_{OUT} = 300mA		80		μs
PSRR	PSRR	V_{IN} = [V_{OUT} +1V]V_{DC} + 0.5V_{ppAC}, f = 100Hz, I_{OUT} = 30mA		65		dB
I_{SHORT}	Short-circuit Current	V_{IN} = V_{IN-Min} to V_{IN-Max}, V_{OUT} < 0.2V		100		mA
I_{LIMIT}	Current Limit	V_{OUT}/R_{OUT} = 1A	400	600		mA
T_{SHDN}	Thermal Shutdown Threshold			140		°C
T_{HYS}	Thermal Shutdown Hysteresis			15		°C
θ_{JA}	Thermal Resistance Junction-to-Ambient	SOT23 (Note 6)		207		°C/W
		SOT23R (Note 6)		230		°C/W

Notes: 5. Dropout voltage is the voltage difference between the input and the output at which the output voltage drops 2% below its nominal value. This parameter only applies to output voltages above 1.8V.
6. Test conditions for SOT23 and SOT23R: Device mounted on FR-4 substrate PCB, with minimum recommended pad layout, 2oz copper, single sided.

© Diodes Incorporated

Typical Performance Characteristics

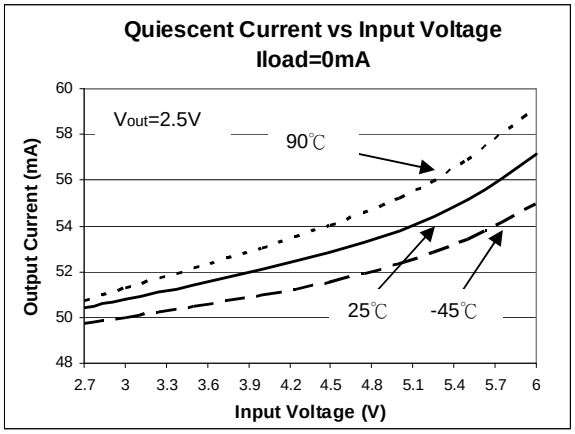

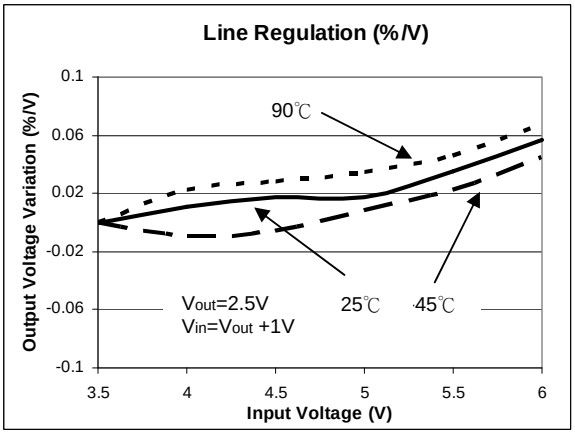

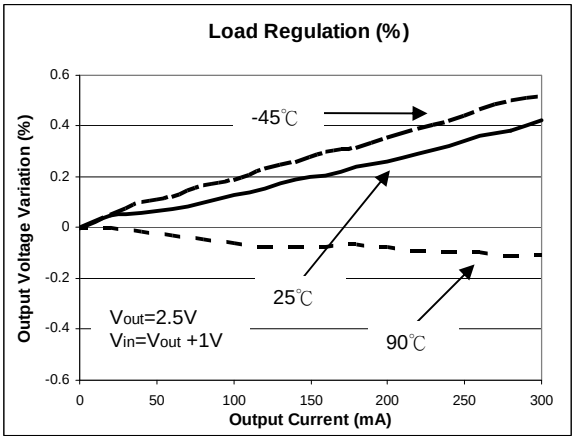

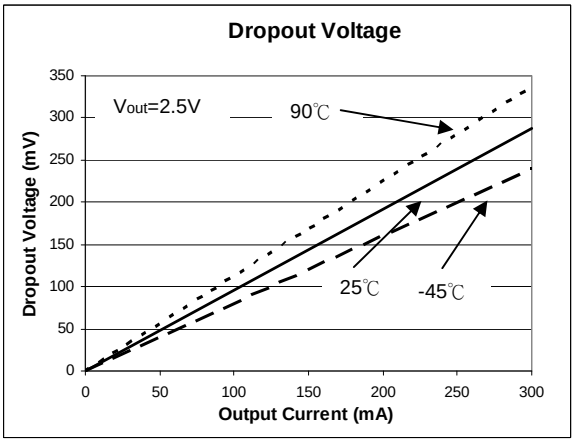

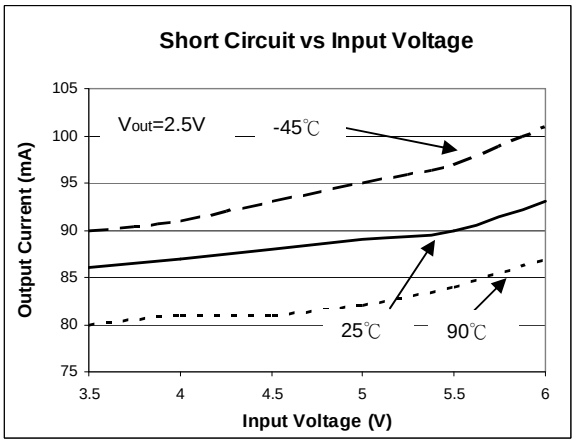

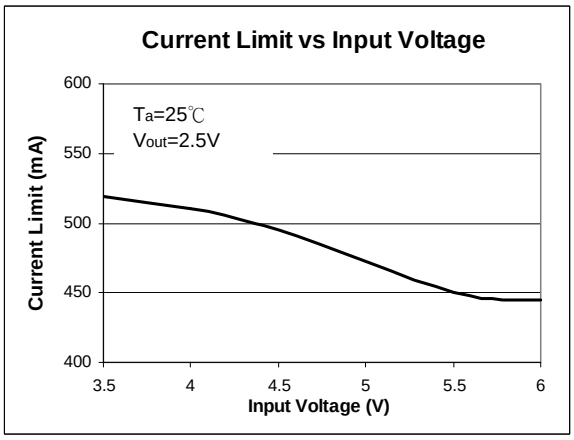

© Diodes Incorporated

Typical Performance Characteristics (Continued)

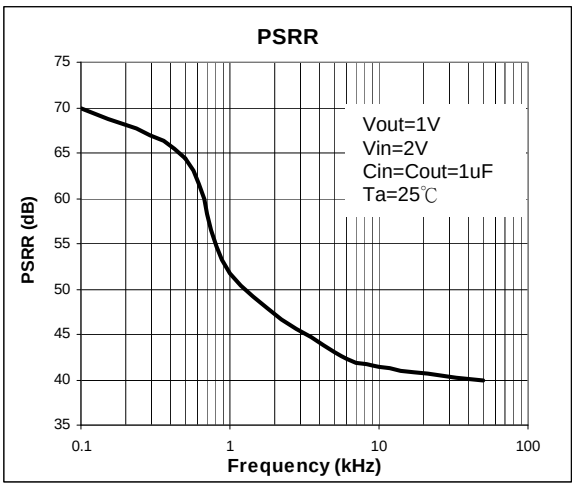

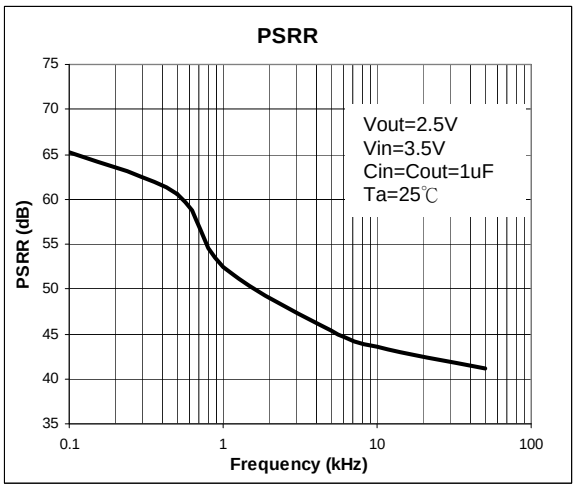

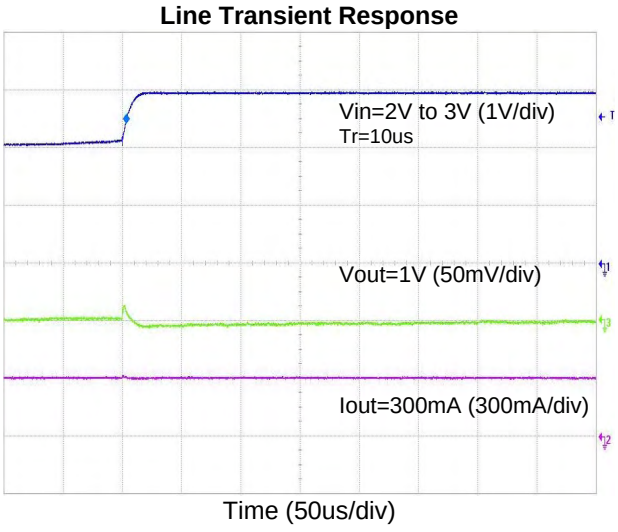

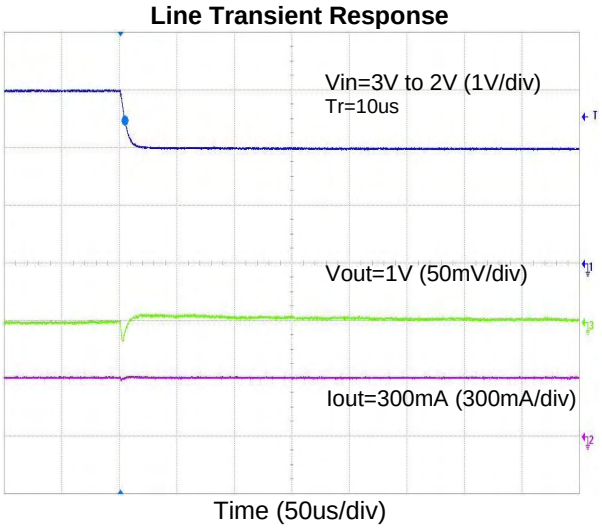

© Diodes Incorporated

Typical Performance Characteristics (Continued)

Load Transient Response

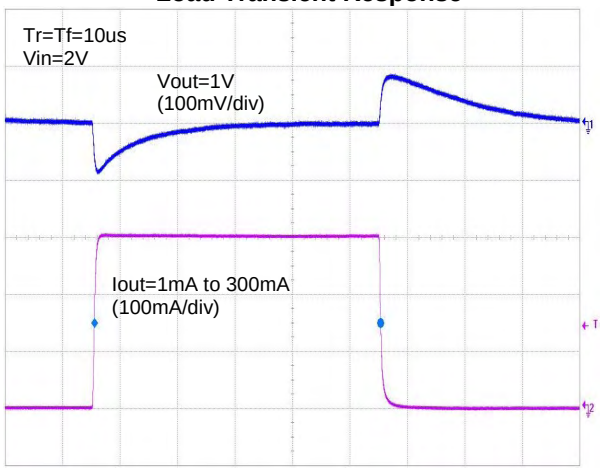

Time (200us/div)

Load Transient Response

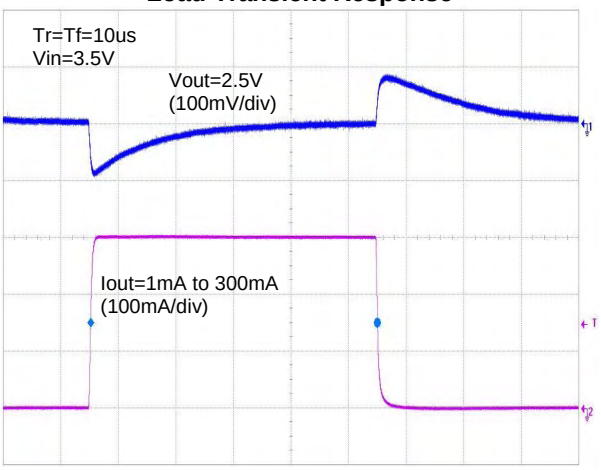

Time (200us/div)

Start-Up Time (No Load)

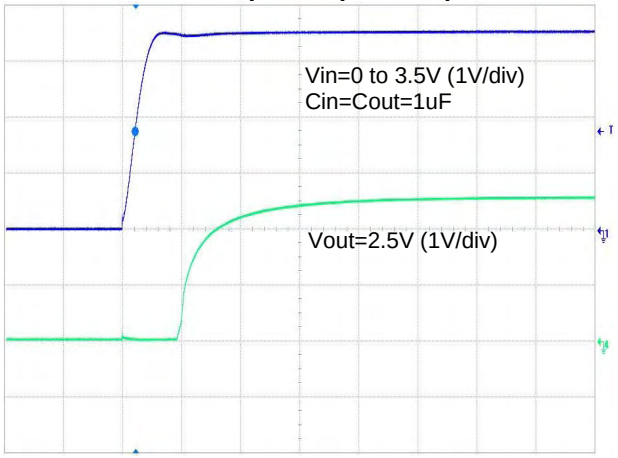

Time (50us/div)

Start-Up Time (300mA Load)

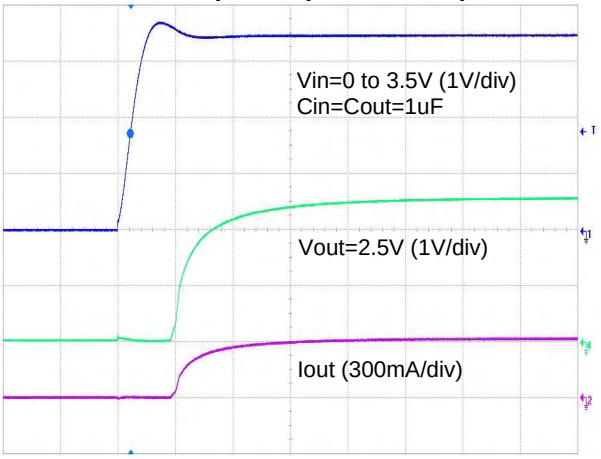

Time (50us/div)

© Diodes Incorporated

Application Note

Input Capacitor

A 1μF ceramic capacitor is recommended to connect between V_{IN} and GND pins to decouple input power supply glitch and noise. The amount of the capacitance may be increased without limit. This input capacitor must be located as close as possible to the device to assure input stability and less noise. For PCB layout, a wide copper trace is required for both V_{IN} and GND. A lower ESR capacitor allows the use of less capacitance, while higher ESR type requires more capacitance.

Output Capacitor

The output capacitor is required to stabilize and help transient response for LDO. The AP7333 is stable with very small ceramic output capacitors. The recommended capacitance is from 1μF to 4.7μF, Equivalent Series Resistance (ESR) is from 10mΩ to 200mΩ, and temperature characteristic is X7R or X5R. Higher capacitance values help to improve load/line transient response. The output capacitance may be increased to keep low undershoot/overshoot. Place output capacitor as close as possible to OUT and GND pins, and keep the leads as short as possible.

No Load Stability

No minimum load is required to keep the device stable. The device will remain stable and regulated in no load condition.

Current Limit Protection

When output current at OUT pin is higher than current limit threshold, the current limit protection will be triggered and clamp the output current to approximately 600mA to prevent over-current and to protect the regulator from damage due to overheating.

Short Circuit Protection

When OUT pin is short-circuit to GND or OUT pin voltage is less than 200mV, short circuit protection will be triggered and clamp the output current to approximately 100mA. This feature protects the regulator from over-current and damage due to overheating.

Thermal Shutdown Protection

Thermal protection disables the output when the junction temperature rises to approximately +140°C, allowing the device to cool down. When the junction temperature reduces to approximately +125°C the output circuitry is enabled again. Depending on power dissipation, thermal resistance, and ambient temperature, the thermal protection circuit may cycle on and off. This cycling limits the heat dissipation of the regulator, protecting it from damage due to overheating.

Ultra Fast Start-up

After turned on, the AP7333 is able to provide full power in as little as tens of microseconds, typically 80μs, without sacrificing low ground current. This feature will help load circuitry move in and out of standby mode in real time, eventually extend battery life for mobile phones and other portable devices.

Fast Transient Response

Fast transient response LDOs can also extend battery life. TDMA-based cell phone protocols such as Global System for Mobile Communications (GSM) have a transmit/receive duty factor of only 12.5 percent, enabling power savings by putting much of the baseband circuitry into standby mode in between transmit cycles. In baseband circuits, the load often transitions virtually instantaneously from 100μA to 100mA. To meet this load requirement, the LDO must react very quickly without a large voltage drop or overshoot — a requirement that cannot be met with conventional, general-purpose LDOs.

The AP7333's fast transient response from 0 to 300mA provides stable voltage supply for fast DSP and GSM chipset with fast changing load.

Small Overshoot and Undershoot

The AP7333 has small and controlled overshoot and undershoot in load and line transitions. This helps to protect supplied circuit from damage and operation error caused by glitches. This feature also permits the usage of small value output decoupling capacitor with AP7333.

Low Quiescent Current

The AP7333, consuming only around 65μA for all input range and output loading, provides great power saving in portable and low power applications.

Wide Output Options

The AP7333, with multiples of fixed output voltage options, provides a versatile LDO solution for many portable applications.

© Diodes Incorporated

Marking Information

(1) SOT23 and SOT23R

(Top View)

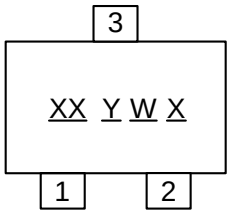

XX : Identification code
Y : Year 0~9
W : Week : A~Z : 1~26 week;
a~z : 27~52 week; z represents
52 and 53 week
X : A~Z : Green

Device	Package	Identification Code
AP7333-10SA	SOT23	JR
AP7333-12SA	SOT23	JS
AP7333-15SA	SOT23	JT
AP7333-18SA	SOT23	JU
AP7333-20SA	SOT23	JV
AP7333-25SA	SOT23	JW
AP7333-28SA	SOT23	JX
AP7333-30SA	SOT23	JY
AP7333-33SA	SOT23	JZ
AP7333-10SR	SOT23R	RA
AP7333-12SR	SOT23R	RB
AP7333-15SR	SOT23R	RC
AP7333-18SR	SOT23R	RD
AP7333-20SR	SOT23R	RE
AP7333-25SR	SOT23R	RF
AP7333-28SR	SOT23R	RG
AP7333-30SR	SOT23R	RH
AP7333-33SR	SOT23R	RJ

© Diodes Incorporated

Package Information (All Dimensions in mm)

(1) Package Type: SOT23 and SOT23R

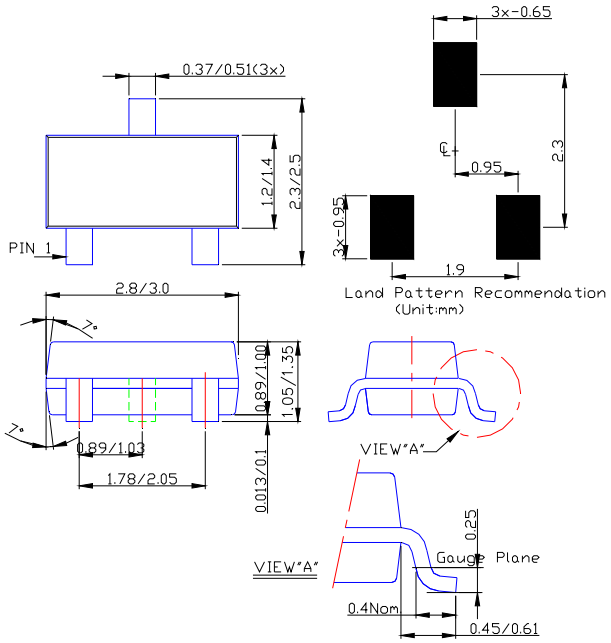

© Diodes Incorporated

IMPORTANT NOTICE

DIODES INCORPORATED MAKES NO WARRANTY OF ANY KIND, EXPRESS OR IMPLIED, WITH REGARDS TO THIS DOCUMENT, INCLUDING, BUT NOT LIMITED TO, THE IMPLIED WARRANTIES OF MERCHANTABILITY AND FITNESS FOR A PARTICULAR PURPOSE (AND THEIR EQUIVALENTS UNDER THE LAWS OF ANY JURISDICTION).

Diodes Incorporated and its subsidiaries reserve the right to make modifications, enhancements, improvements, corrections or other changes without further notice to this document and any product described herein. Diodes Incorporated does not assume any liability arising out of the application or use of this document or any product described herein; neither does Diodes Incorporated convey any license under its patent or trademark rights, nor the rights of others. Any Customer or user of this document or products described herein in such applications shall assume all risks of such use and will agree to hold Diodes Incorporated and all the companies whose products are represented on Diodes Incorporated website, harmless against all damages.

Diodes Incorporated does not warrant or accept any liability whatsoever in respect of any products purchased through unauthorized sales channel.
Should Customers purchase or use Diodes Incorporated products for any unintended or unauthorized application, Customers shall indemnify and hold Diodes Incorporated and its representatives harmless against all claims, damages, expenses, and attorney fees arising out of, directly or indirectly, any claim of personal injury or death associated with such unintended or unauthorized application.

Products described herein may be covered by one or more United States, international or foreign patents pending. Product names and markings noted herein may also be covered by one or more United States, international or foreign trademarks.

LIFE SUPPORT

Diodes Incorporated products are specifically not authorized for use as critical components in life support devices or systems without the express written approval of the Chief Executive Officer of Diodes Incorporated. As used herein:

A. Life support devices or systems are devices or systems which:

1. are intended to implant into the body, or
2. support or sustain life and whose failure to perform when properly used in accordance with instructions for use provided in the labeling can be reasonably expected to result in significant injury to the user.

B. A critical component is any component in a life support device or system whose failure to perform can be reasonably expected to cause the failure of the life support device or to affect its safety or effectiveness.

Customers represent that they have all necessary expertise in the safety and regulatory ramifications of their life support devices or systems, and acknowledge and agree that they are solely responsible for all legal, regulatory and safety-related requirements concerning their products and any use of Diodes Incorporated products in such safety-critical, life support devices or systems, notwithstanding any devices- or systems-related information or support that may be provided by Diodes Incorporated. Further, Customers must fully indemnify Diodes Incorporated and its representatives against any damages arising out of the use of Diodes Incorporated products in such safety-critical, life support devices or systems.

Copyright © 2009, Diodes Incorporated

www.diodes.com

ENTEGRECİ

Bu belge www.entegreci.com üzerinden sunulmaktadır.

Elektronik komponent tedarikinde Entegreci

Entegreci, Eskişehir merkezli, Türkiye geneline satış yapan bir elektronik komponent mağazasıdır. Entegreler (IC), mikrodenetleyiciler, transistörler, diyotlar, pasif elemanlar, konnektörler, modüller ve geliştirme kartları tek adetten seri üretim adetlerine kadar satılır. Ürün sayfalarında güncel stok durumunu, fiyatı ve datasheet bağlantısını bulabilirsiniz.

Parça koduyla arama

Üretici parça numarasını yazın; stok ve fiyatı hemen görün.

www.entegreci.com

Ürün kategorileri

Entegreden kapasitöre tüm elektronik komponent kategorileri.

Kategorilere göz atın

Üreticiler

Aradığınız üreticinin ürünlerini tek sayfada inceleyin.

Üreticileri görün

Toplu alım ve teklif

Listede olmayan ya da yüksek adetli parçalar için teklif isteyin.

Teklif isteyin

www.entegreci.com | **destek@entegreci.com** | **0850 305 90 34**

Entegreci is an online electronic components store based in Türkiye. Search by manufacturer part number to see stock, prices and datasheets for integrated circuits, microcontrollers, transistors, passive components and connectors, or request a quote for parts that are not listed.

Bu sayfa Entegreci tarafından eklenmiştir. Belgenin önceki sayfaları asıl yayıncısına aittir ve içeriği değiştirilmemiştir; en güncel sürüm için belgenin yayıncısına başvurun.