AP7335

300mA, LOW QUIESCENT CURRENT, FAST TRANSIENT LOW DROPOUT LINEAR REGULATOR

Description

The AP7335 is a 300mA, adjustable and fixed output voltage, low dropout linear regulator. The device included pass element, error amplifier, band-gap, current limit and thermal shutdown circuitry. The device is turned on when EN pin is set to logic high level.

The characteristics of low dropout voltage and low quiescent current make it suitable for low power applications, for example, battery powered devices. The typical quiescent current is approximately 35µA. Built-in current-limit and thermal-shutdown functions prevent IC from damage in fault conditions.

This device is available with adjustable output from 0.8V to 5.0V, and fixed version with 0.8V, 1.0V, 1.2V, 1.5V, 1.8V, 2.0V, 2.5V, 2.7V, 2.8V, 3.0V, 3.3V and 3.9V outputs. Please contact your local sales office for any other voltage options.

The AP7335 is available in SOT25 and DFN2020-6 packages.

Pin Assignments

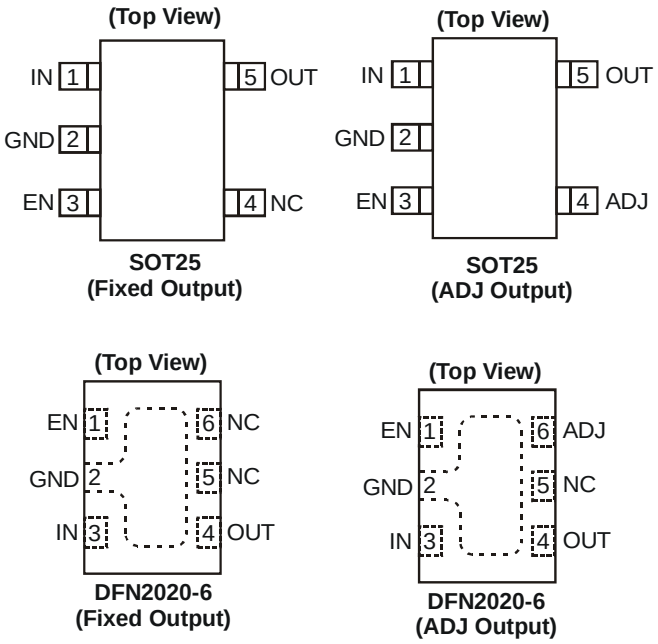

Features

- 300mA Low Dropout Regulator with EN
- Very low I_Q: 35µA
- Wide input voltage range: 2V to 6V
- Wide adjustable output: 0.8V to 5.0V
- Fixed output options: 0.8V to 3.9V (0.1V step size possible)
- High PSRR: 65dB at 1kHz
- Fast start-up time: 220µs
- Stable with low ESR, 1µF ceramic output capacitor
- Excellent Load/Line Transient Response
- Low dropout: 150mV at 300mA
- Current limit and short circuit protection
- Thermal shutdown protection
- Ambient temperature range: -40ºC to 85°C
- SOT25, and DFN2020-6: Available in “Green” Molding Compound (No Br, Sb)
- Lead Free Finish/ RoHS Compliant (Note 1)

Applications

- Smart Phones
- MP3/MP4
- Battery-powered devices
- Bluetooth headset

Note: 1. EU Directive 2002/95/EC (RoHS). All applicable RoHS exemptions applied. Please visit our website at http://www.diodes.com/products/lead_free.html.

© Diodes Incorporated

Typical Application Circuit

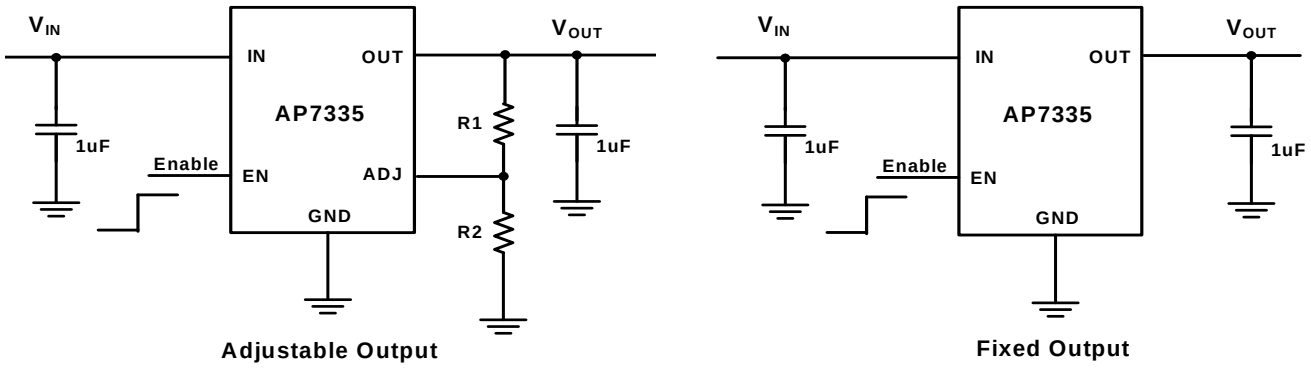

$$V_{OUT} = V_{REF}\left(1+\frac{R_1}{R_2}\right) \text{ where } R_2 \le 80K\Omega$$

Pin Descriptions

Pin Name	Pin Number				Description
	SOT25 (fixed)	SOT25 (adj)	DFN2020-6 (fixed)	DFN2020-6 (adj)	
IN	1	1	3	3	Voltage input pin. Bypass to ground through at least 1µF MLCC capacitor
GND	2	2	2	2	Ground
EN	3	3	1	1	Enable input, active high
ADJ	-	4	-	6	Output feedback pin
NC	4	-	5, 6	5	No connection
OUT	5	5	4	4	Voltage output pin. Bypass to ground through 1µF MLCC capacitor

© Diodes Incorporated

Functional Block Diagram

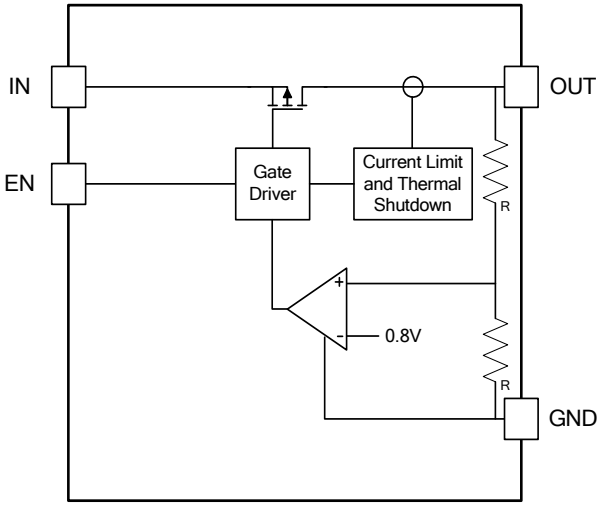

Fixed Version

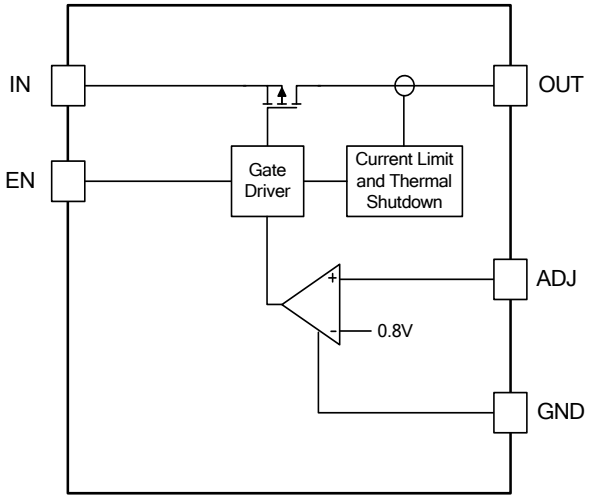

Adjustable Version

Absolute Maximum Ratings

Symbol	Parameter	Ratings	Unit
ESD HBM	Human Body Model ESD Protection	2000	V
ESD MM	Machine Model ESD Protection	200	V
V_{IN}	Input Voltage	6.5	V
	OUT, EN Voltage	V_{IN} + 0.3	V
	Continuous Load Current per Channel	Internal Limited	
T_{ST}	Storage Temperature Range	-65 to 150	°C
T_J	Maximum Junction Temperature	150	°C

Recommended Operating Conditions

Symbol	Parameter	Min	Max	Unit
V_{IN}	Input voltage	2	6	V
I_{OUT}	Output Current (Note 2)	0	300	mA
T_A	Operating Ambient Temperature	-40	85	°C

Note: 2. The device maintains a stable, regulated output voltage without a load current.

© Diodes Incorporated

Electrical Characteristics

(T_A = 25°C, V_{IN} = V_{OUT} +1V, C_{IN} = 1µF, C_{OUT} = 1µF, V_{EN} = 2V, unless otherwise stated)

Symbol	Parameter	Test Conditions	Min	Typ.	Max	Unit
V_{REF}	ADJ Reference Voltage (Adjustable version)	I_{OUT}= 0mA		0.8		V
I_{ADJ}	ADJ Leakage (Adjustable version)			0.1	1	µA
V_{OUT}	Output Voltage Accuracy	T_A = -40°C to 85°C, I_{OUT} = 10% of $I_{OUT-Max}$	-2		2	%
$\Delta V_{OUT}/\Delta V_{IN}/V$	Line Regulation	V_{IN} = (V_{OUT} +1V) to V_{IN-Max}, V_{EN} = V_{IN}, I_{OUT} = 1mA		0.02	0.20	%/V
$\Delta V_{OUT}/V_{OUT}$	Load Regulation	V_{IN} = (V_{OUT} +1V) to V_{IN-Max}, I_{OUT} = 1mA to 300mA	-0.6		0.6	%
$V_{Dropout}$	Dropout Voltage (Note 3)	V_{OUT} < 2.5V, I_{OUT} = 300mA		170	300	mV
		V_{OUT} ≥ 2.5V, I_{OUT} = 300mA		150	200	
I_Q	Input Quiescent Current	V_{EN} = V_{IN}, I_{OUT} = 0mA		35	80	µA
I_{SHDN}	Input Shutdown Current	V_{EN} = 0V, I_{OUT} = 0mA		0.1	1	µA
I_{LEAK}	Input Leakage Current	V_{EN} = 0V, OUT grounded		0.1	1	µA
t_{ST}	Start-up Time	V_{EN} = 0V to 2.0V in 1µs, I_{OUT} = 300mA		220		µs
PSRR	PSRR (Note 4)	V_{IN} = [V_{OUT} +1V]V_{DC} + 0.5V_{ppAC}, f = 1kHz, I_{OUT} = 50mA		65		dB
I_{SHORT}	Short-circuit Current	V_{IN} = V_{IN-Min} to V_{IN-Max}, V_{OUT} < 0.2V (fixed) or 25% of V_{OUT} (ADJ version)		140		mA
I_{LIMIT}	Current limit	V_{IN} = V_{IN-Min} to V_{IN-Max}, V_{OUT}/R_{OUT} = 1.2A	400	600		mA
V_{IL}	EN Input Logic Low Voltage	V_{IN} = V_{IN-Min} to V_{IN-Max}			0.4	V
V_{IH}	EN Input Logic High Voltage	V_{IN} = V_{IN-Min} to V_{IN-Max}	1.4			V
I_{EN}	EN Input Current	V_{IN} = 0V or V_{IN-Max}	-1		1	µA
T_{SHDN}	Thermal shutdown threshold			145		°C
T_{HYS}	Thermal shutdown hysteresis			15		°C
θ_{JA}	Thermal Resistance Junction-to-Ambient	SOT25 (Note 5)		187		°C/W
		DFN2020-6 (Note 5)		251		

Notes: 3. Dropout voltage is the voltage difference between the input and the output at which the output voltage drops 2% below its nominal value. This parameter only applies to input voltages above minimum V_{IN} = 2.0V.

4. At V_{IN} < 2.3V, the PSRR performance may be reduced.

5. Test condition for all packages: Device mounted on FR-4 substrate PC board, 1oz copper, with minimum recommended pad layout.

© Diodes Incorporated

Typical Performance Characteristics

Start-Up Time

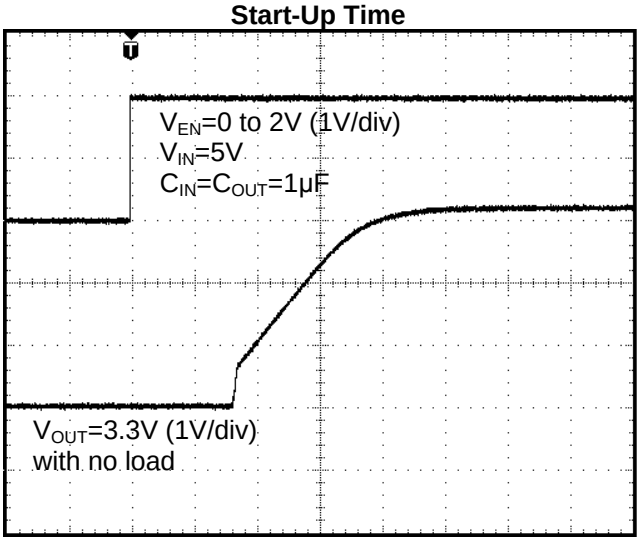

Time (40μs/div)

Start-Up Time

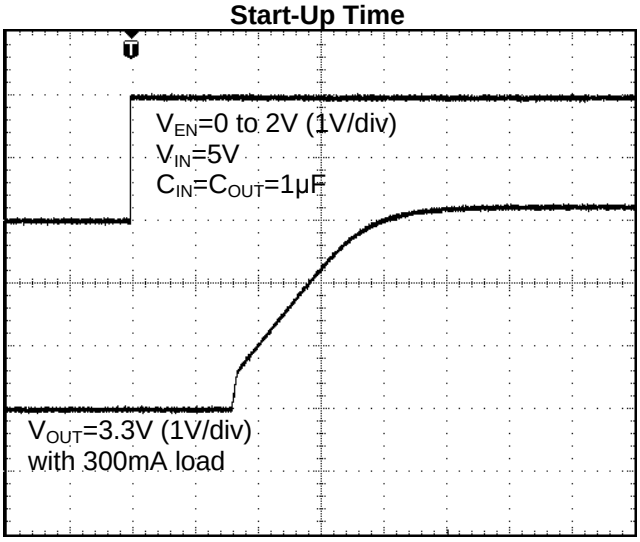

Time (40μs/div)

Line Transient Response

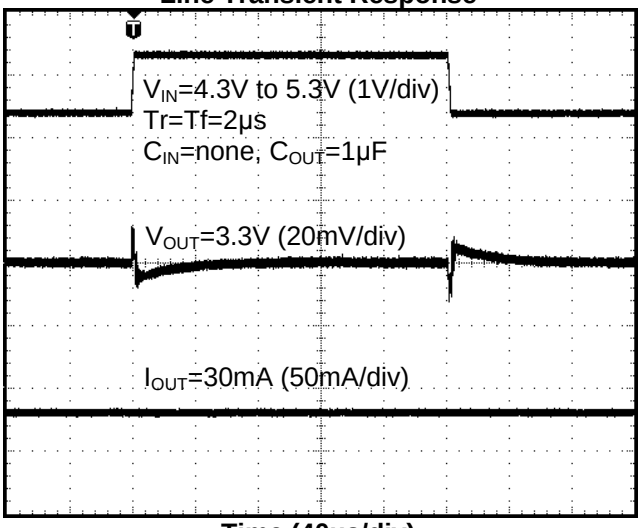

Time (40μs/div)

Line Transient Response

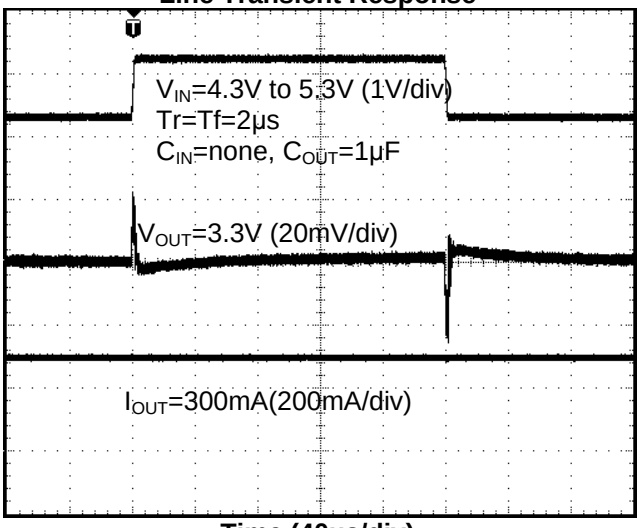

Time (40μs/div)

© Diodes Incorporated

Typical Performance Characteristics (cont.)

Load Transient Response

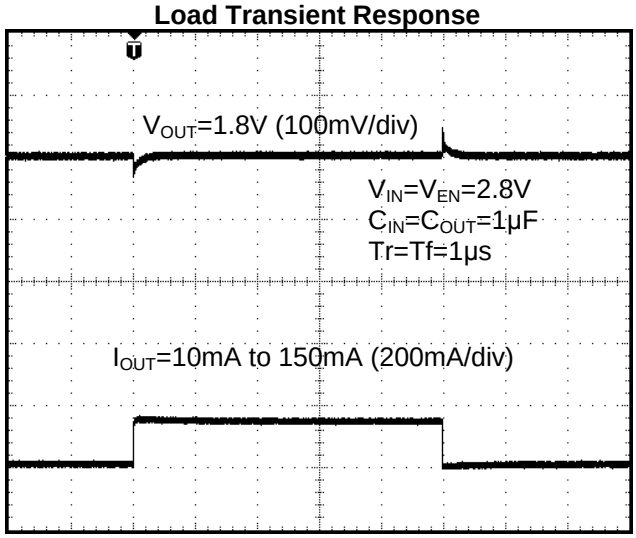

Time (100µs/div)

Load Transient Response

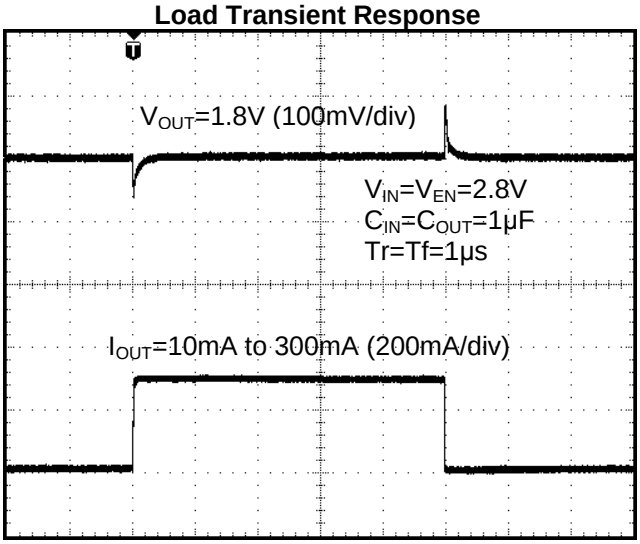

Time (100µs/div)

Load Transient Response

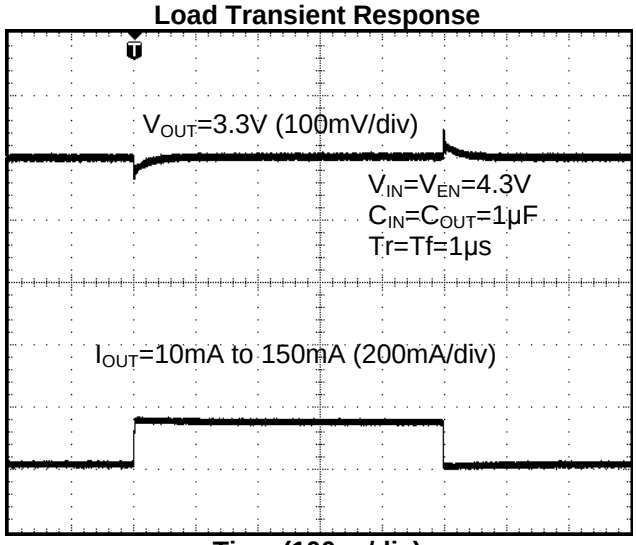

Time (100µs/div)

Load Transient Response

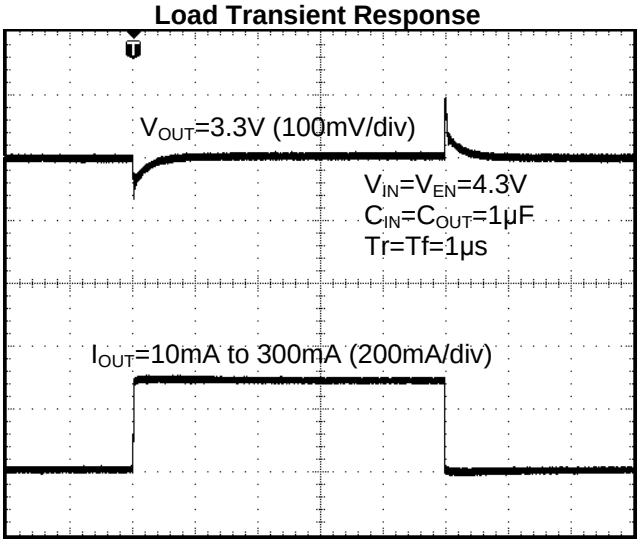

Time (100µs/div)

© Diodes Incorporated

Typical Performance Characteristics (cont.)

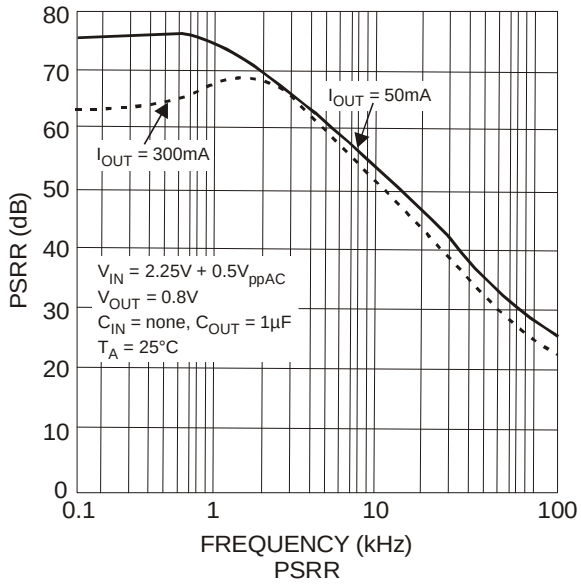

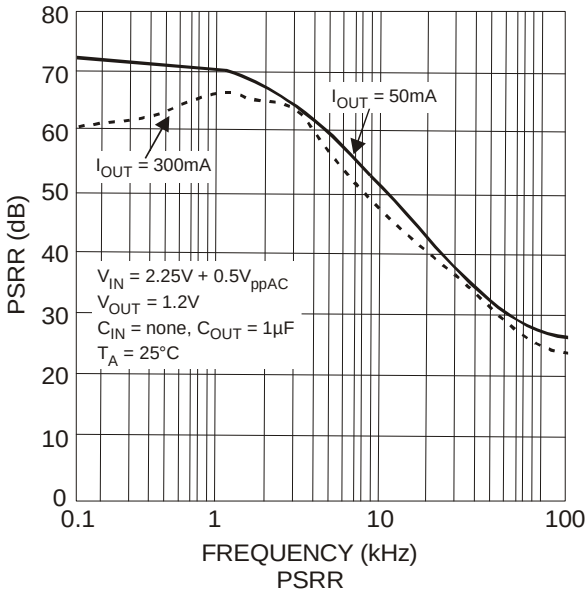

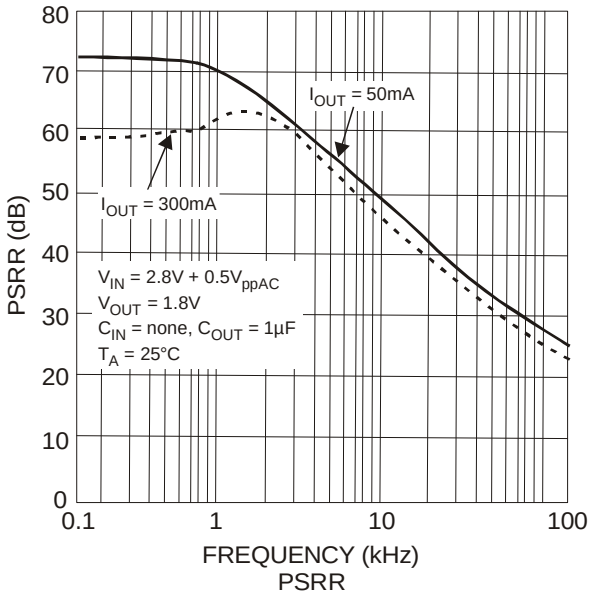

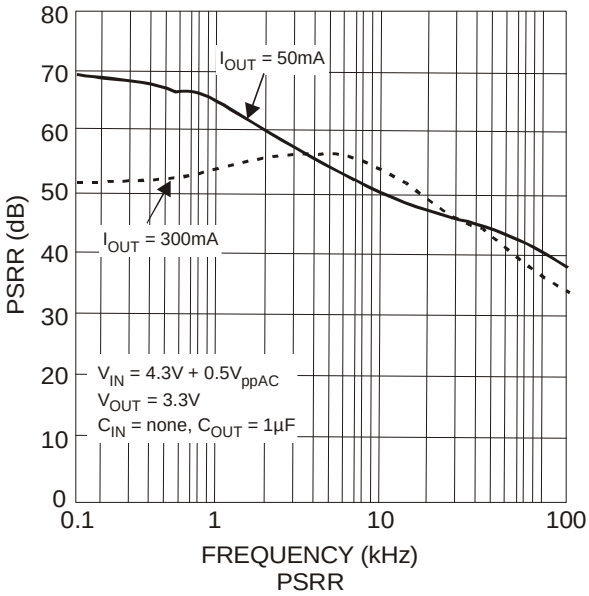

© Diodes Incorporated

Typical Performance Characteristics (cont.)

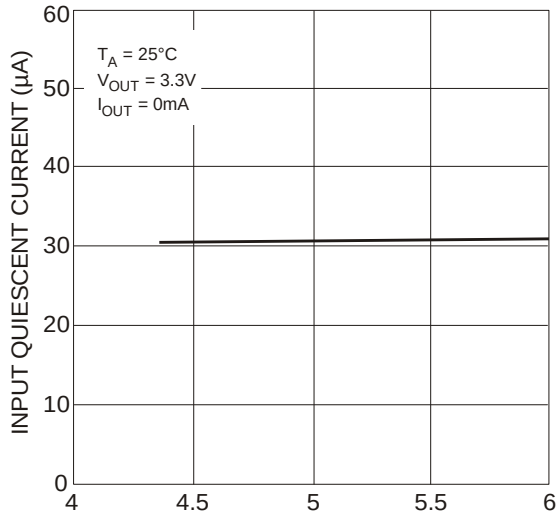

Input Quiescent Current vs. Input Voltage

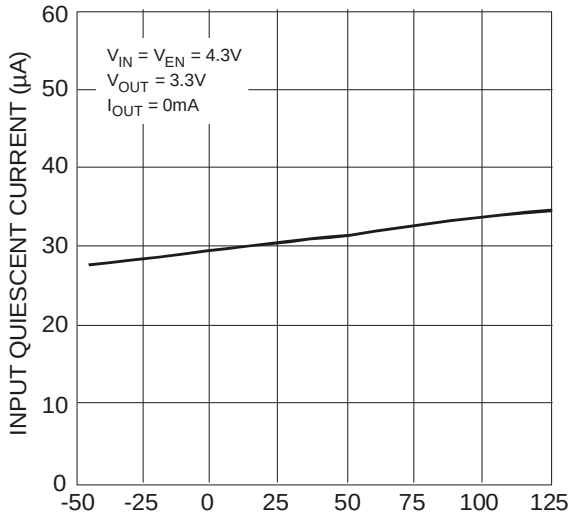

Input Quiescent Current vs. Temperature

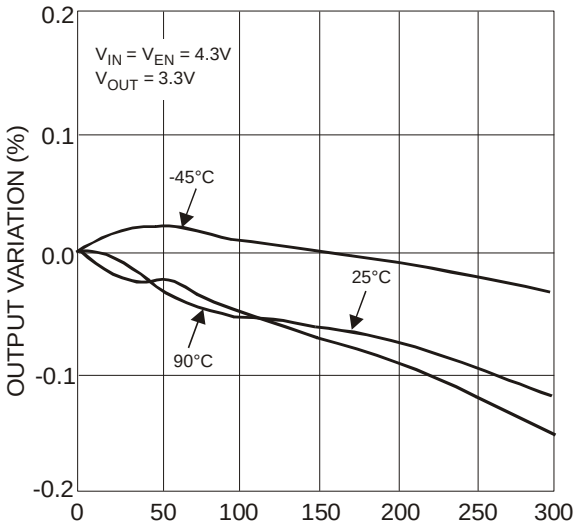

Load Regulation

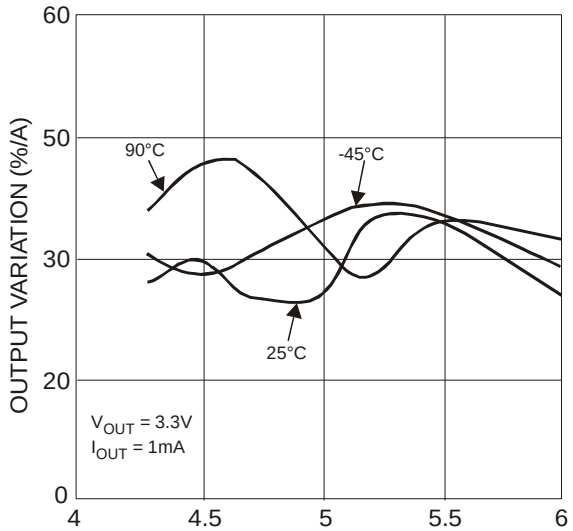

Line Regulation

© Diodes Incorporated

Typical Performance Characteristics (cont.)

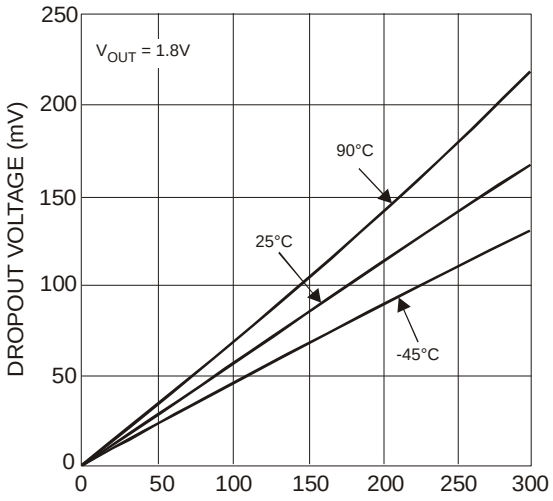

Dropout Voltage vs. Output Current

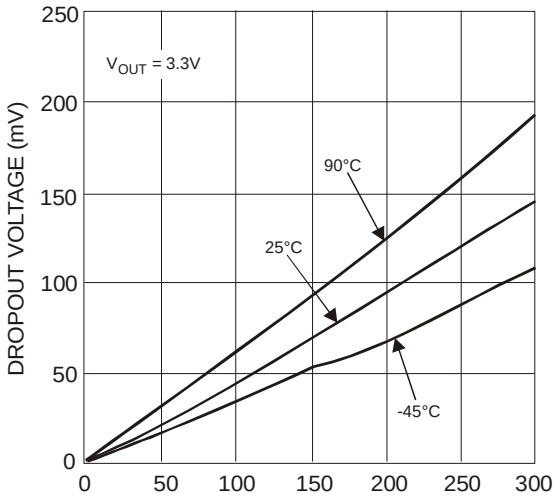

Dropout Voltage vs. Output Current

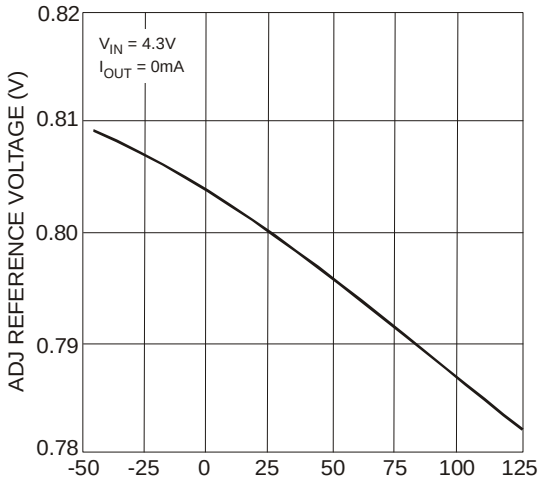

ADJ Reference Voltage vs. Temperature

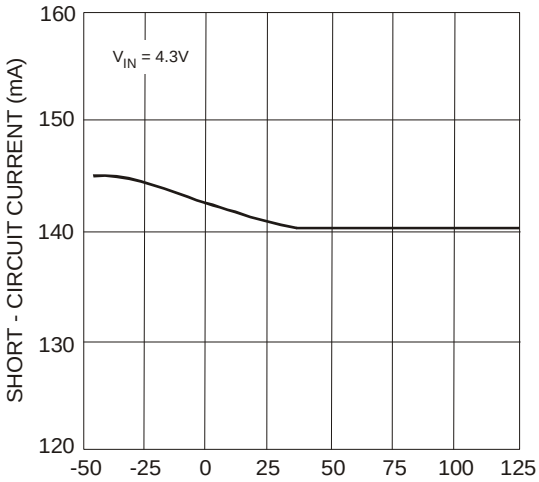

Short - Circuit Current vs. Temperature

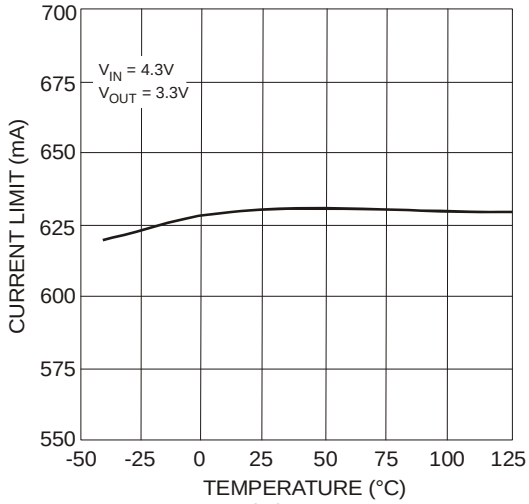

Current Limit vs. Temperature

© Diodes Incorporated

Application Notes

Input Capacitor

A 1µF ceramic capacitor is recommended between IN and GND pins to decouple input power supply glitch and noise. The amount of the capacitance may be increased without limit. This input capacitor must be located as close as possible to the device to assure input stability and reduce noise. For PCB layout, a wide copper trace is required for both IN and GND pins. A lower ESR capacitor type allows the use of less capacitance, while higher ESR type requires more capacitance.

Output Capacitor

The output capacitor is required to stabilize and improve the transient response of the LDO. The AP7335 is stable with very small ceramic output capacitors. Using a ceramic capacitor value that is at least 1µF with ESR > 15mΩ on the output ensures stability. Higher capacitance values help to improve line and load transient response. The output capacitance may be increased to keep low undershoot and overshoot. Output capacitor must be placed as close as possible to OUT and GND pins.

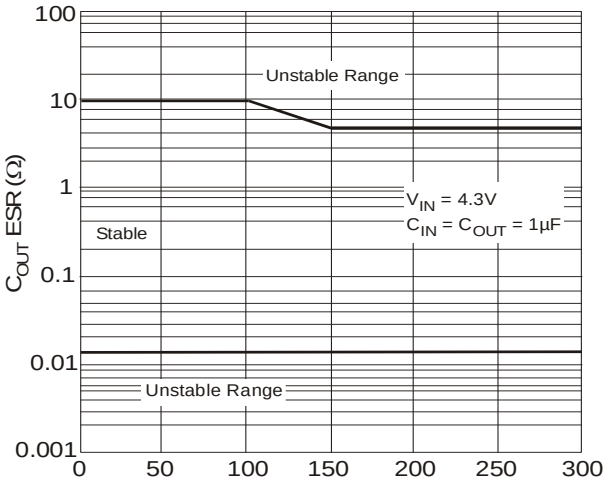

Region of Stable C_{OUT} ESR vs. Load Current

Adjustable Operation

The AP7335 provides output voltage from 0.8V to 5.0V through external resistor divider as shown below.

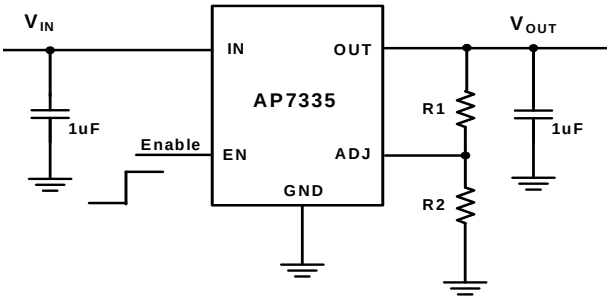

The output voltage is calculated by:

$$V_{OUT} = V_{REF}\left(1+\frac{R_1}{R_2}\right)$$

Where V_{REF}=0.8V (the internal reference voltage)

Rearranging the equation will give the following that is used for adjusting the output to a particular voltage:

$$R_1 = R_2\left(\frac{V_{OUT}}{V_{REF}}-1\right)$$

To maintain the stability of the internal reference voltage, R_2 need to be kept smaller than 80kΩ.

No Load Stability

Other than external resistor divider, no minimum load is required to keep the device stable. The device will remain stable and regulated in no load condition.

ON/OFF Input Operation

The AP7335 is turned on by setting the EN pin high, and is turned off by pulling it low. If this feature is not used, the EN pin should be tied to IN pin to keep the regulator output on at all time. To ensure proper operation, the signal source used to drive the EN pin must be able to swing above and below the specified turn-on/off voltage thresholds listed in the Electrical Characteristics section under V_{IL} and V_{IH}.

Current Limit Protection

When output current at OUT pin is higher than current limit threshold, the current limit protection will be triggered and clamp the output current to approximately 600mA to prevent over-current and to protect the regulator from damage due to overheating.

Short Circuit Protection

When OUT pin is short-circuit to GND, short circuit protection will be triggered and clamp the output current to approximately 140mA. This feature protects the regulator from over-current and damage due to overheating.

Thermal Shutdown Protection

Thermal protection disables the output when the junction temperature rises to approximately +145°C, allowing the device to cool down. When the junction temperature reduces to approximately +130°C the output circuitry is enabled again. Depending on power dissipation, thermal resistance, and ambient temperature, the thermal protection circuit may cycle on and off. This cycling limits the heat dissipation of the regulator, protecting it from damage due to overheating.

© Diodes Incorporated

Application Notes

Ultra Fast Start-up

After enabled, the AP7335 is able to provide full power in as little as tens of microseconds, typically 220µs, without sacrificing low ground current. This feature will help load circuitry move in and out of standby mode in real time, eventually extend battery life for mobile phones and other portable devices.

Fast Transient Response

Fast transient response LDO can extend battery life. TDMA-based cell phone protocols such as Global System for Mobile Communications (GSM) have a transmit/receive duty factor of only 12.5 percent, enabling power savings by putting much of the baseband circuitry into standby mode in between transmit cycles. In baseband circuits, the load often transitions virtually instantaneously from 100µA to 100mA. To meet this load requirement, the LDO must react very quickly without a large voltage drop or overshoot — a requirement that cannot be met with conventional, general-purpose LDO.

The AP7335's fast transient response from 0 to 300mA provides stable voltage supply for fast DSP and GSM chipset with fast changing load.

Low Quiescent Current

The AP7335, consuming only around 35µA for all input range, provides great power saving in portable and low power applications.

Wide Output Range

The AP7335, with a wide output range of 0.8V to 5.0V, provides a versatile LDO solution for many portable applications.

Power Dissipation

The device power dissipation and proper sizing of the thermal plane that is connected to the thermal pad is critical to avoid thermal shutdown and ensure reliable operation. Power dissipation of the device depends on input voltage and load conditions and can be calculated by:

$$P_D = (V_{IN} - V_{OUT}) \times I_{OUT}$$

The maximum power dissipation, handled by the device, depends on the maximum junction to ambient thermal resistance, maximum ambient temperature, and maximum device junction temperature, which can be calculated by the equation in the following:

$$P_D(max@T_A) = \frac{(+145°C - T_A)}{R_{\theta JA}}$$

© Diodes Incorporated

Ordering Information

AP7335 - XX XX G - X

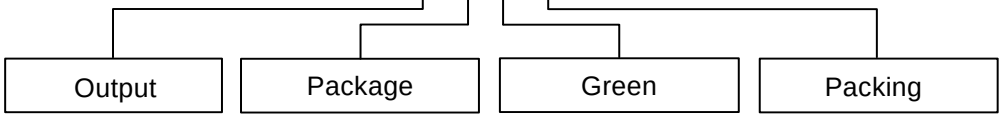

Output	Package	Green	Packing
Blank : ADJ 08 : 0.8V 10 : 1.0V 12 : 1.2V 15 : 1.5V 18 : 1.8V 20 : 2.0V 25 : 2.5V 27 : 2.7V 28 : 2.8V 30 : 3.0V 33 : 3.3V 39 : 3.9V	W : SOT25 SN : DFN2020-6	G : Green	7 : Tape & Reel

Device	Package Code	Packaging (Note 6)	7"/13" Tape and Reel	
			Quantity	Part Number Suffix
AP7335-XXWG-7	W	SOT25	3000/Tape & Reel	-7
AP7335-XXSNG-7	SN	DFN2020-6	3000/Tape & Reel	-7

Note: 6. Pad layout as shown on Diodes Inc. suggested pad layout document AP02001, which can be found on our website at http://www.diodes.com/datasheets/ap02001.pdf.

© Diodes Incorporated

Marking Information

(1) SOT25

(Top View)

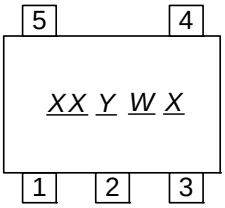

XX : Identification code
Y : Year 0~9
W : Week : A~Z : 1~26 week;
a~z : 27~52 week; z represents 52 and 53 week
X : A~Z : Green

Device	Package	Identification Code
AP7335-ADJ	SOT25	ZA
AP7335-08	SOT25	ZB
AP7335-10	SOT25	ZC
AP7335-12	SOT25	ZD
AP7335-15	SOT25	ZE
AP7335-18	SOT25	ZF
AP7335-20	SOT25	ZG
AP7335-25	SOT25	ZH
AP7335-27	SOT25	ZI
AP7335-28	SOT25	ZJ
AP7335-30	SOT25	ZK
AP7335-33	SOT25	ZM
AP7335-39	SOT25	ZN

(2) DFN2020-6

(Top View)

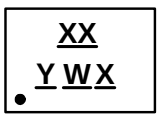

XX : Identification Code
Y : Year : 0~9
W : Week : A~Z : 1~26 week;
a~z : 27~52 week; z represents 52 and 53 week
X : A~Z : Green

Device	Package	Identification Code
AP7335-ADJ	DFN2020-6	ZA
AP7335-08	DFN2020-6	ZB
AP7335-10	DFN2020-6	ZC
AP7335-12	DFN2020-6	ZD
AP7335-15	DFN2020-6	ZE
AP7335-18	DFN2020-6	ZF
AP7335-20	DFN2020-6	ZG
AP7335-25	DFN2020-6	ZH
AP7335-27	DFN2020-6	ZI
AP7335-28	DFN2020-6	ZJ
AP7335-30	DFN2020-6	ZK
AP7335-33	DFN2020-6	ZM
AP7335-39	DFN2020-6	ZN

© Diodes Incorporated

Package Outline Dimensions

(1) Package Type: SOT25

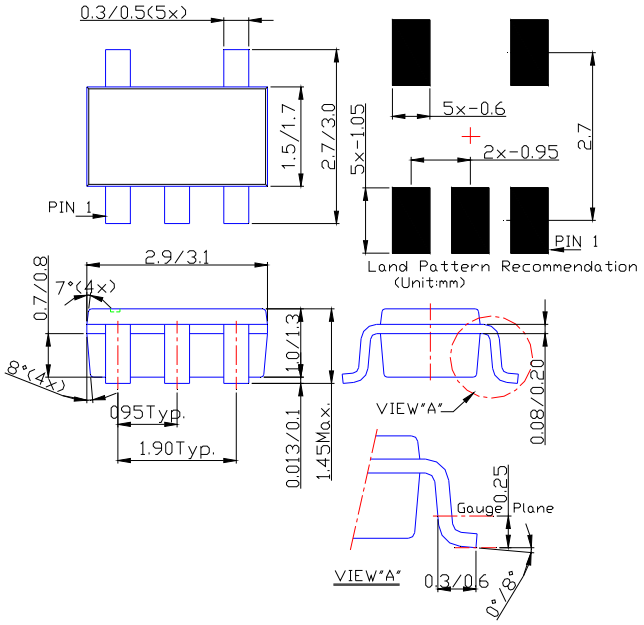

(2) Package Type: DFN2020-6

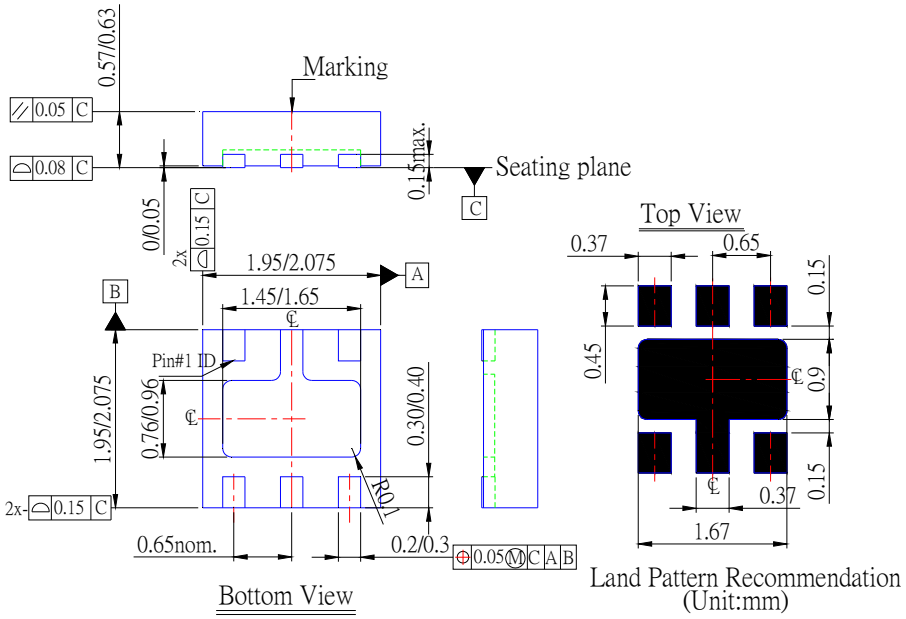

© Diodes Incorporated

Taping Orientation (Note 7)

For DFN2020-6

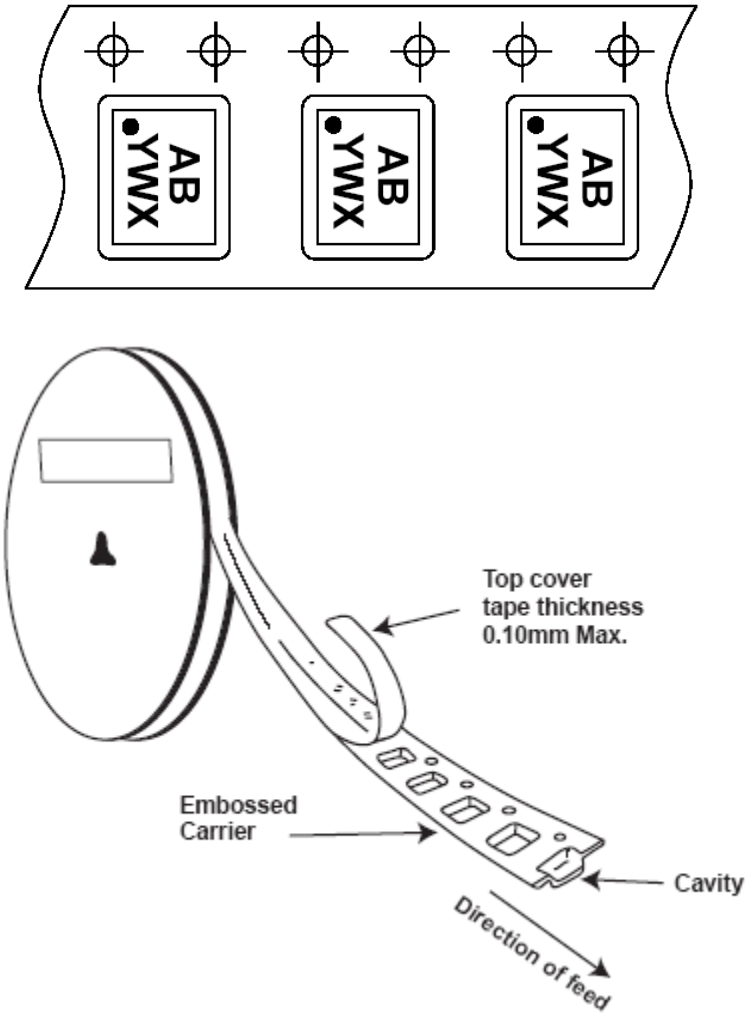

Note: 7. The taping orientation of the other package type can be found on our website at http://www.diodes.com/datasheets/ap02007.pdf.

© Diodes Incorporated

IMPORTANT NOTICE

DIODES INCORPORATED MAKES NO WARRANTY OF ANY KIND, EXPRESS OR IMPLIED, WITH REGARDS TO THIS DOCUMENT, INCLUDING, BUT NOT LIMITED TO, THE IMPLIED WARRANTIES OF MERCHANTABILITY AND FITNESS FOR A PARTICULAR PURPOSE (AND THEIR EQUIVALENTS UNDER THE LAWS OF ANY JURISDICTION).

Diodes Incorporated and its subsidiaries reserve the right to make modifications, enhancements, improvements, corrections or other changes without further notice to this document and any product described herein. Diodes Incorporated does not assume any liability arising out of the application or use of this document or any product described herein; neither does Diodes Incorporated convey any license under its patent or trademark rights, nor the rights of others. Any Customer or user of this document or products described herein in such applications shall assume all risks of such use and will agree to hold Diodes Incorporated and all the companies whose products are represented on Diodes Incorporated website, harmless against all damages.

Diodes Incorporated does not warrant or accept any liability whatsoever in respect of any products purchased through unauthorized sales channel.
Should Customers purchase or use Diodes Incorporated products for any unintended or unauthorized application, Customers shall indemnify and hold Diodes Incorporated and its representatives harmless against all claims, damages, expenses, and attorney fees arising out of, directly or indirectly, any claim of personal injury or death associated with such unintended or unauthorized application.

Products described herein may be covered by one or more United States, international or foreign patents pending. Product names and markings noted herein may also be covered by one or more United States, international or foreign trademarks.

LIFE SUPPORT

Diodes Incorporated products are specifically not authorized for use as critical components in life support devices or systems without the express written approval of the Chief Executive Officer of Diodes Incorporated. As used herein:

A. Life support devices or systems are devices or systems which:

1. are intended to implant into the body, or

2. support or sustain life and whose failure to perform when properly used in accordance with instructions for use provided in the labeling can be reasonably expected to result in significant injury to the user.

B. A critical component is any component in a life support device or system whose failure to perform can be reasonably expected to cause the failure of the life support device or to affect its safety or effectiveness.

Customers represent that they have all necessary expertise in the safety and regulatory ramifications of their life support devices or systems, and acknowledge and agree that they are solely responsible for all legal, regulatory and safety-related requirements concerning their products and any use of Diodes Incorporated products in such safety-critical, life support devices or systems, notwithstanding any devices- or systems-related information or support that may be provided by Diodes Incorporated. Further, Customers must fully indemnify Diodes Incorporated and its representatives against any damages arising out of the use of Diodes Incorporated products in such safety-critical, life support devices or systems.

Copyright © 2011, Diodes Incorporated

www.diodes.com

ENTEGRECİ

Bu belge www.entegreci.com üzerinden sunulmaktadır.

Elektronik komponent tedarikinde Entegreci

Entegreci, Eskişehir merkezli, Türkiye geneline satış yapan bir elektronik komponent mağazasıdır. Entegreler (IC), mikrodenetleyiciler, transistörler, diyotlar, pasif elemanlar, konnektörler, modüller ve geliştirme kartları tek adetten seri üretim adetlerine kadar satılır. Ürün sayfalarında güncel stok durumunu, fiyatı ve datasheet bağlantısını bulabilirsiniz.

Parça koduyla arama

Üretici parça numarasını yazın; stok ve fiyatı hemen görün.

www.entegreci.com

Ürün kategorileri

Entegreden kapasitöre tüm elektronik komponent kategorileri.

Kategorilere göz atın

Üreticiler

Aradığınız üreticinin ürünlerini tek sayfada inceleyin.

Üreticileri görün

Toplu alım ve teklif

Listede olmayan ya da yüksek adetli parçalar için teklif isteyin.

Teklif isteyin

www.entegreci.com | **destek@entegreci.com** | **0850 305 90 34**

Entegreci is an online electronic components store based in Türkiye. Search by manufacturer part number to see stock, prices and datasheets for integrated circuits, microcontrollers, transistors, passive components and connectors, or request a quote for parts that are not listed.

Bu sayfa Entegreci tarafından eklenmiştir. Belgenin önceki sayfaları asıl yayıncısına aittir ve içeriği değiştirilmemiştir; en güncel sürüm için belgenin yayıncısına başvurun.