150mA ULTRA-LOW QUIESCENT CURRENT LDO with ENABLE

Description

The AP7350 is a low dropout regulator with high output voltage accuracy. The AP7350 includes a voltage reference, error amplifier, current limit circuit and an enable input to turn it on/off. With the integrated resistor network, fixed output voltage versions can be delivered.

With its ultra-low quiescent current and miniature package dimensions, the AP7350 is well suited for low-power handheld, wearable devices, and other battery-operated devices requiring an extended time period until new battery replacement.

The AP7350 is available in the wafer level chip scale X2-WLB0606-4 package. This part is one of the smallest LDO footprints in the industry allowing for the use of a bare minimum of board space within the application.

Pin Assignments

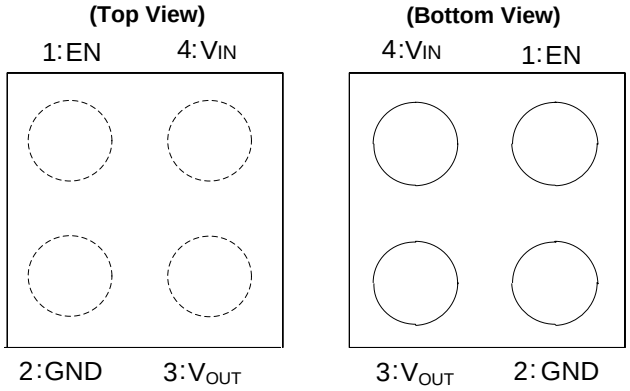

X2-WLB0606-4

Features

- Low V_{IN} and Wide V_{IN} Range: 2.0V to 5.25V
- Guarantee Output Current, 150mA
- Output Voltage Range: 1.2V to 4.5V
- V_{OUT} Accuracy: ±1%
- Quiescent Current as Low as 0.25µA
- Typical Standby Current 0.02µA
- ESD Protection Exceeds JESD 22
  - Exceeds 4000V Human Body Model (A114)
  - Exceeds 400V Machine Model (A115)
- Latch-Up Exceeds 400mA per JESD 78, Class I
- Moisture Sensitivity: Level 1 per J-STD-020
- Terminals: Finish SnAgCu Balls, Solderable per MIL-STD-202, Method 208 e1
- Weight: 0.01 grams (Approximate)
- **Totally Lead-Free & Fully RoHS Compliant (Notes 1 & 2)**
- **Halogen and Antimony Free. "Green" Device (Note 3)**
- **For automotive applications requiring specific change control (i.e. parts qualified to AEC-Q100/101/200, PPAP capable, and manufactured in IATF 16949 certified facilities), please contact us or your local Diodes representative. https://www.diodes.com/quality/product-definitions/**

Applications

- Wearable Electronics
- Sensor Module for Internet-of-Things (IoT)
- Wireless Communication Module
- Battery-Operated Device
- Camera
- Image Sensor

Notes:
1. No purposely added lead. Fully EU Directive 2002/95/EC (RoHS), 2011/65/EU (RoHS 2) & 2015/863/EU (RoHS 3) compliant.
2. See https://www.diodes.com/quality/lead-free/ for more information about Diodes Incorporated's definitions of Halogen- and Antimony-free, "Green" and Lead-free.
3. Halogen- and Antimony-free "Green" products are defined as those which contain <900ppm bromine, <900ppm chlorine (<1500ppm total Br + Cl) and <1000ppm antimony compounds.

Typical Applications Circuit (Notes 4 & 5)

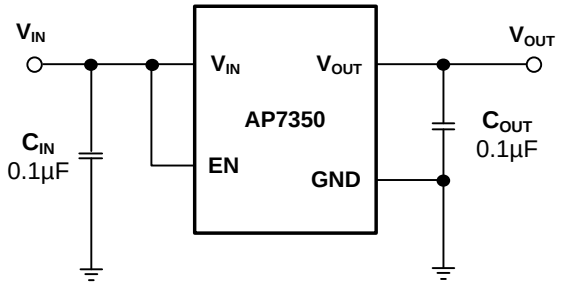

Notes:
4. X5R- and X7R-type capacitors are suggested due to their minimal variation in value and ESR over temperature.
5. Avoid light exposure of the chip scale package to maintain the expected electrical performance and functionality of the AP7350.

© Diodes Incorporated

Pin Descriptions

Pin Number	Pin Name	Function
1	EN	Channel enable pin. This pin should be driven either high or low and must not be floating. Driving this pin high enables regulator output, while pulling it low enable regulator into shutdown mode.
2	GND	Ground
3	V_{OUT}	Output voltage pin
4	V_{IN}	Power input pin

Functional Block Diagram

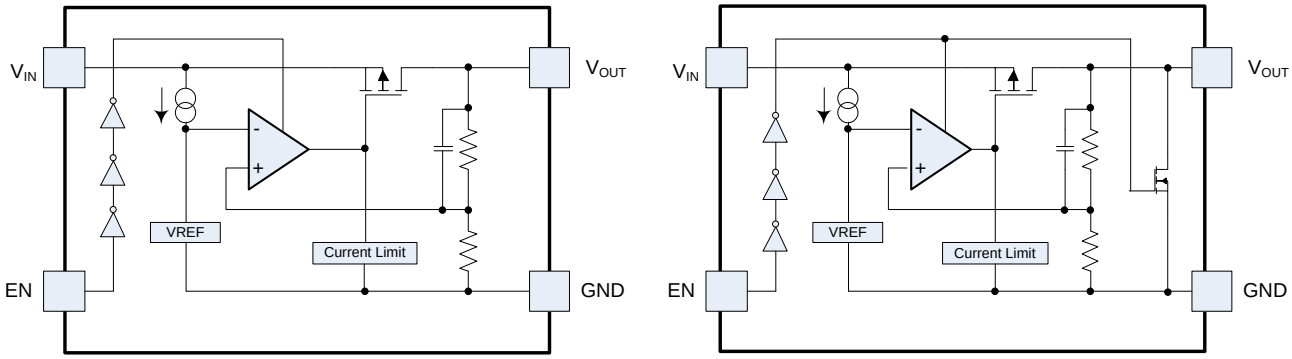

AP7350 (Without Discharge)

AP7350D (With Discharge)

Absolute Maximum Ratings (Note 6)

Symbol	Parameter	Rating	Unit
ESD HBM	Human Body Model ESD Protection	4	kV
ESD MM	Machine Model ESD Protection	400	V
V_{IN}	Input Voltage	6.0	V
V_{EN}	Input Voltage at EN pin	6.0	V
V_{OUT}	Output Voltage to GND	-0.3 to V_{IN} +0.3	V
T_A	Operating Ambient Temperature	-40 to +85	°C
T_J	Maximum Junction Temperature	+125	°C
T_{STG}	Storage Temperature	-55 to +125	°C
P_D	Power Dissipation (Note 7)	315	mW

Notes: 6. Stresses beyond those listed under *Absolute Maximum Ratings* can cause permanent damage to the device. These are stress ratings only and functional operation of the device at these conditions is not implied. Exposure to absolute-maximum-rated conditions for extended periods can affect device reliability.

7. This is based on an application temperature of +40°C. Derate 3.75mW per °C for each degree above +40°C.

© Diodes Incorporated

Recommended Operating Conditions

Symbol	Parameter	Min	Max	Unit
V_{IN}	Input Voltage	2.0	5.25	V
I_{OUT}	Output Current	0	150	mA
T_A	Operating Ambient Temperature	-40	+85	°C

Electrical Characteristics (@T_A = +25°C, V_{EN} = V_{IN} = 5.0V (V_{OUT} > 4.0V), V_{EN} = V_{IN} = V_{OUT}+1V (1.5V < V_{OUT} ≤ 4.0V), V_{EN} = V_{IN} = 2.5V (V_{OUT} ≤ 1.5V), I_{OUT} = 1mA, C_{IN} = C_{OUT} = 0.1µF, unless otherwise specified.)

Parameter	Conditions		Min	Typ	Max	Unit
Input Voltage	T_A = -40°C to +85°C		2.0	—	5.25	V
Output Voltage Accuracy	V_{OUT} > 2.0V I_{OUT} = 1mA	T_A = +25°C	-1	—	+1	%
		T_A = -40°C to +85°C	-2	—	+2	
	V_{OUT} ≤ 2.0V I_{OUT} = 1mA	T_A = +25°C	-40	—	40	mV
		T_A = -40°C to +85°C	-80	—	80	
Line Regulation ($\Delta V_{OUT}/\Delta V_{IN}/V_{OUT}$)	MAX (V_{OUT} + 1.0V, 2.5V) ≤ V_{IN} ≤ 5.0V		—	0.02	0.1	%/V
Load Regulation (ΔV_{OUT})	1mA ≤ I_{OUT} ≤ 150mA (all versions except 4.5V)		-25	—	25	mV
	1mA ≤ I_{OUT} ≤ 150mA (applicable to 4.5V version)		-45	—	45	mV
Short Circuit Current Limit (Note 8)	V_{OUT} = 0V		—	60	—	mA
Quiescent Current (Note 9)	I_{OUT} = 0mA	T_A = +25°C	—	0.25	0.4	µA
		T_A = -40°C to +85°C	—	—	0.7	µA
Standby Current ($I_{STANDBY}$)	Set EN low, No load		—	0.02	0.2	µA
Output Current	V_{IN} ≥ V_{OUT} + $V_{DROPOUT}$		150	—	—	mA
Dropout Voltage (Note 10)	I_{OUT} = 150mA	V_{OUT} = 1.2V	—	0.60	0.90	V
		V_{OUT} = 1.5V	—	0.43	0.75	
		V_{OUT} = 1.8V	—	0.33	0.60	
		V_{OUT} = 1.85V	—	0.32	0.58	
		V_{OUT} = 2.3V	—	0.25	0.51	
		V_{OUT} = 2.5V	—	0.22	0.48	
		V_{OUT} = 2.7V	—	0.21	0.44	
		V_{OUT} = 2.8V	—	0.19	0.40	
		V_{OUT} = 3.0V	—	0.18	0.35	
		V_{OUT} = 3.3V	—	0.16	0.35	
		V_{OUT} = 4.5V	—	0.14	0.35	
Thermal Resistance Junction-to-Ambient (θ_{JA}) (Note 11)	Package: X2-WLB0606-4		—	267	—	°C/W
EN Input Low Voltage	—		—	—	0.4	V
EN Input High Voltage	—		1.0	—	5.25	V
Active Output Discharge Resistance (Note 12)	V_{IN} = 4.0V, V_{EN} = 0V		—	35	—	Ω

Notes: 8. Short circuit current is measured with V_{OUT} pulled to GND.
9. Quiescent current defined here is the difference in current between the input and the output.
10. Dropout voltage is the voltage difference between the input and the output at which the output voltage drops 2% below its nominal value.
11. Test condition: X2-WLB0606-4 is mounted on PCB (compliant with JEDEC standard).
12. AP7350 is available with 2 options: built-in discharge (AP7350D) and non-discharge (AP7350).

© Diodes Incorporated

Performance Characteristics

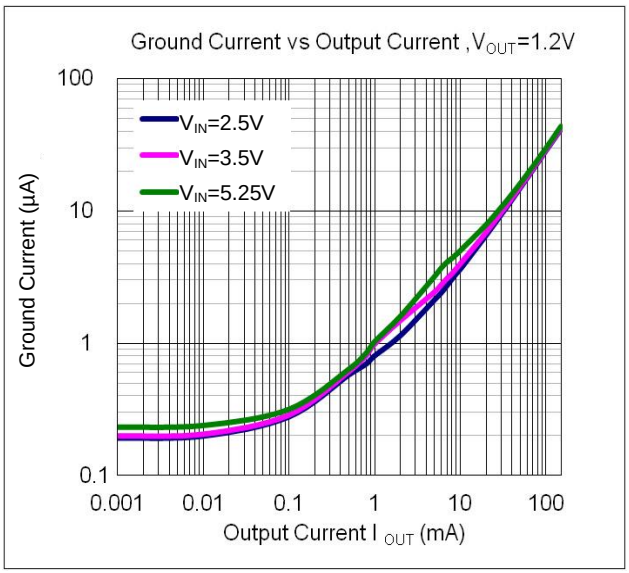

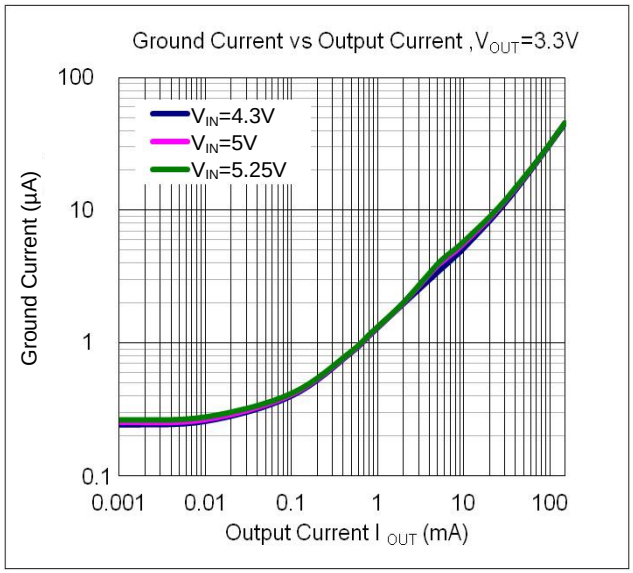

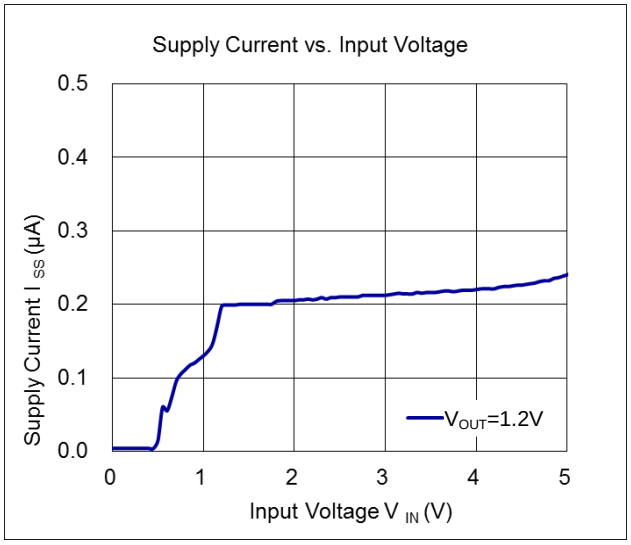

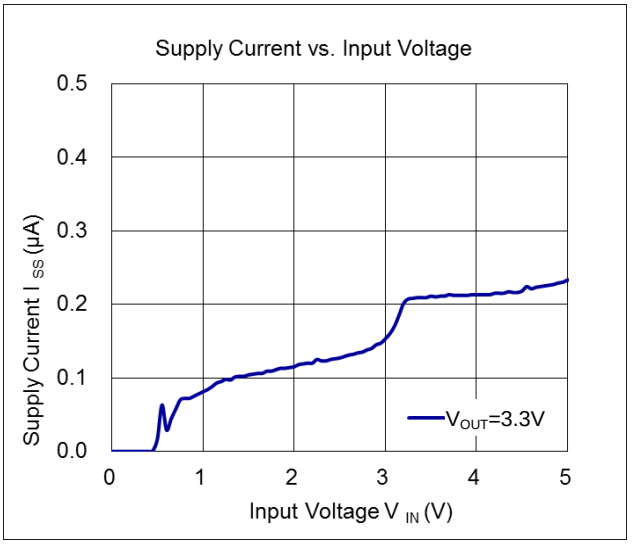

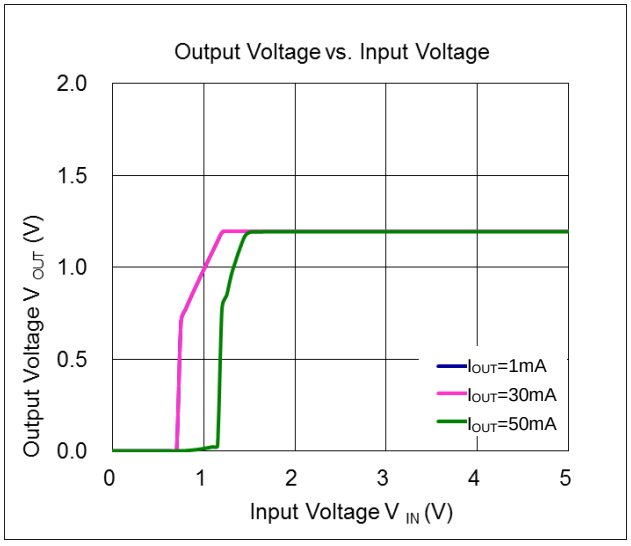

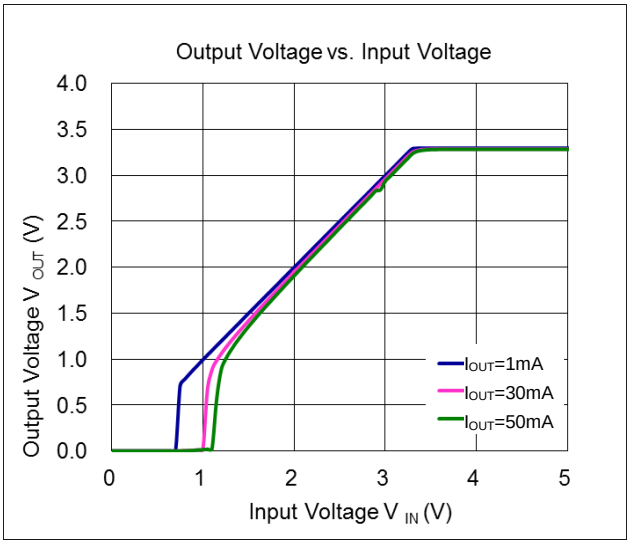

© Diodes Incorporated

Performance Characteristics (continued)

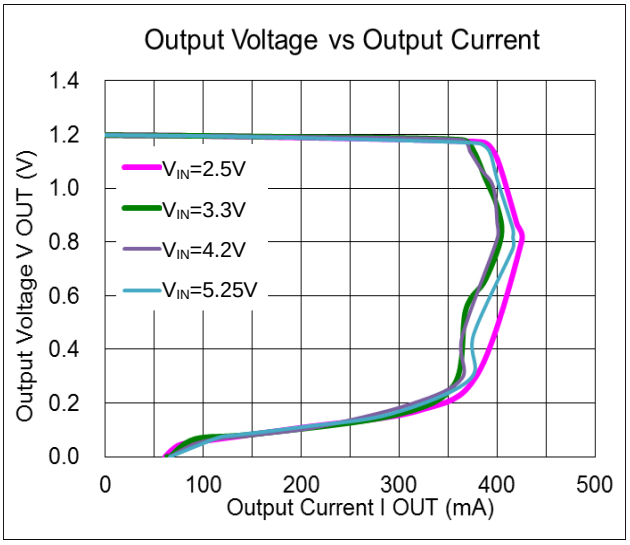

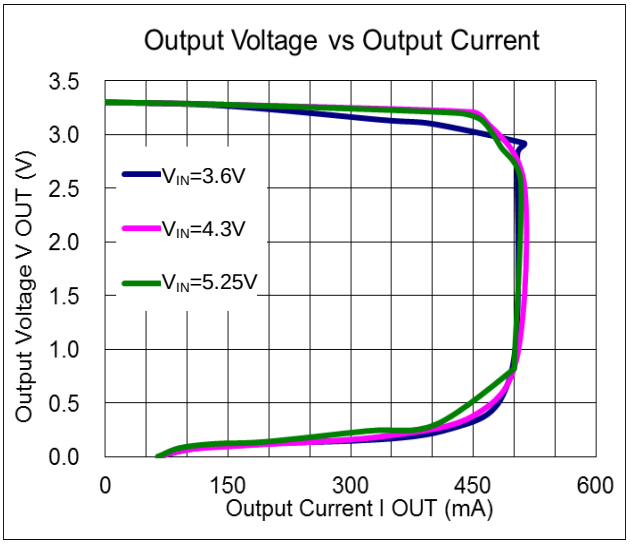

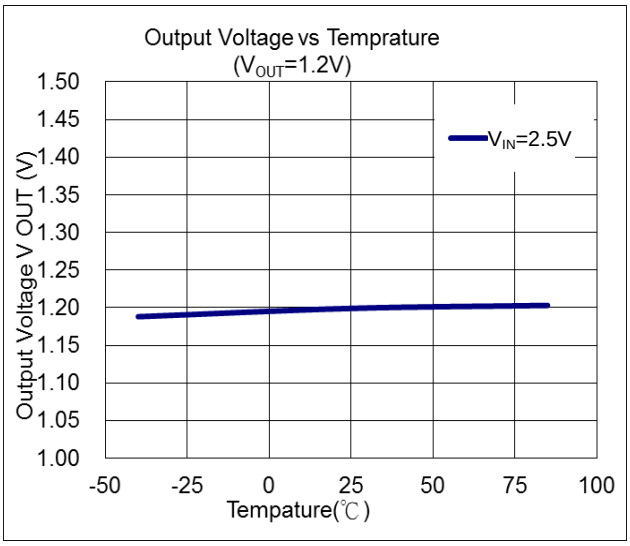

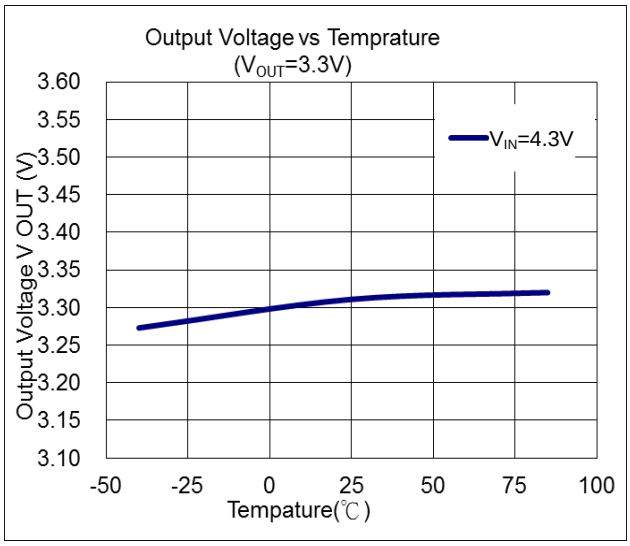

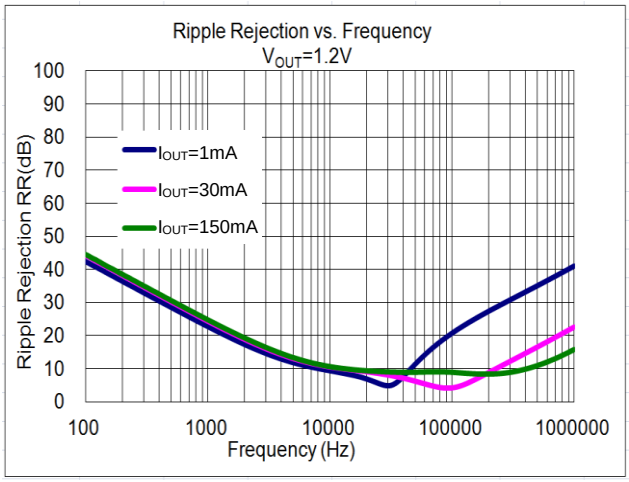

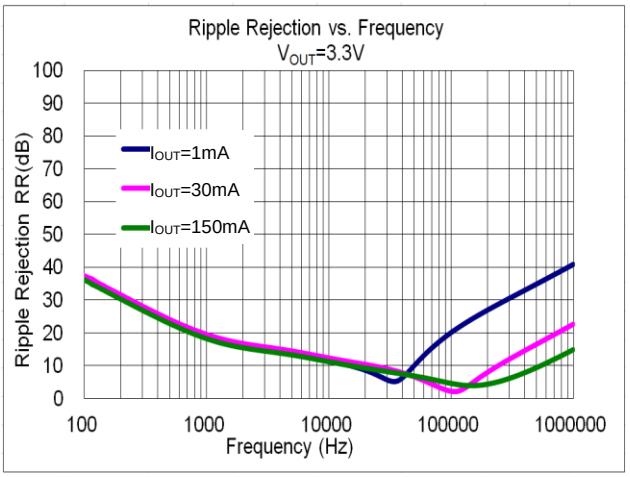

© Diodes Incorporated

Performance Characteristics (continued)

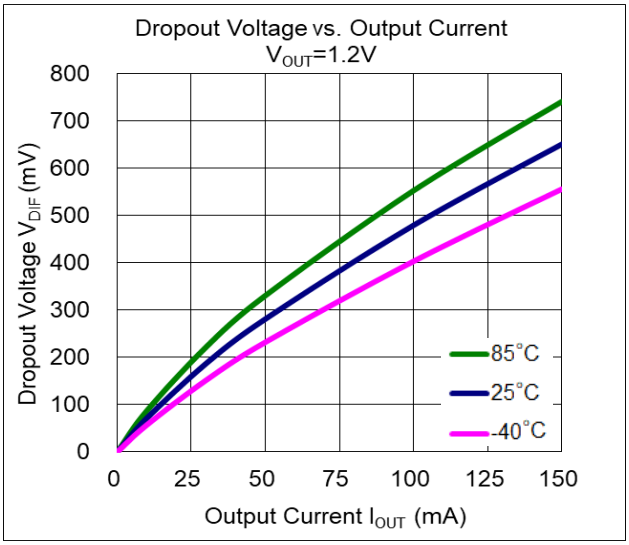

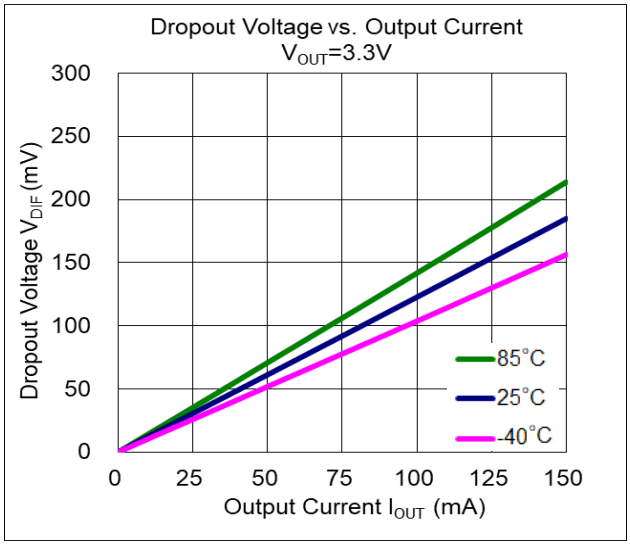

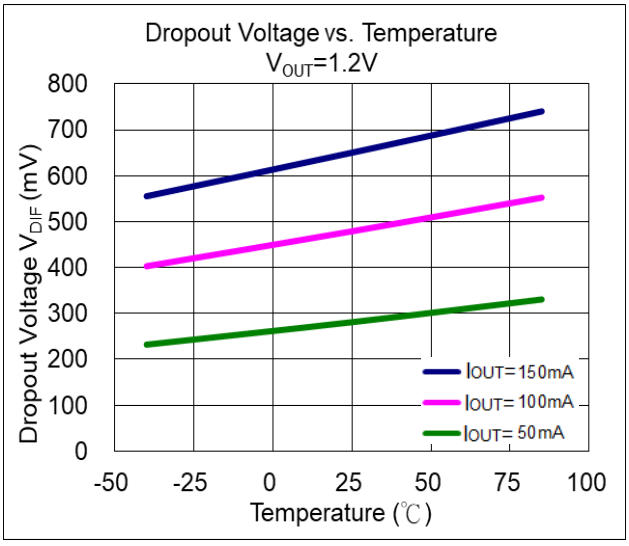

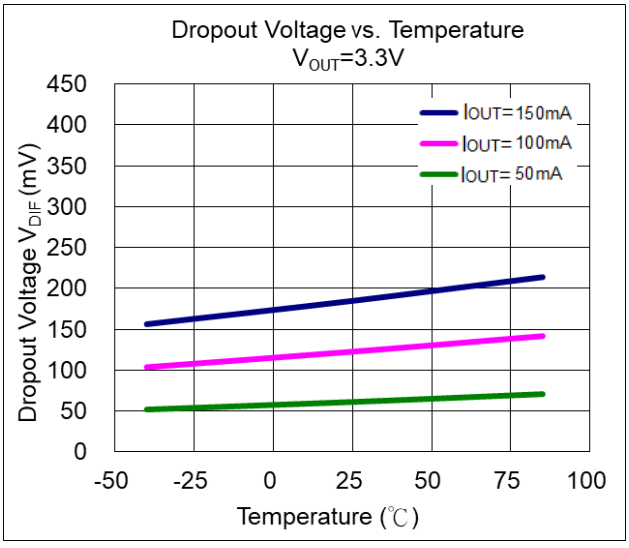

Load Transient Response (C_{IN} = C_{OUT} = 0.1μF, t_R = t_F = 5.0μs, unless otherwise specified.)

V_{IN} = 3.3V, V_{OUT} = 1.2V, I_{OUT} = 1 to 50mA

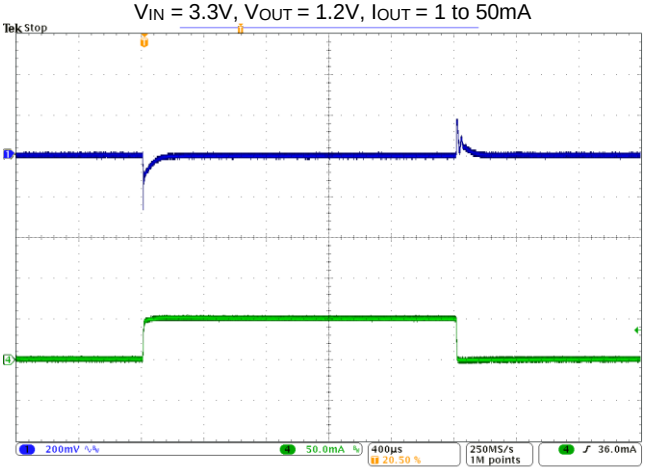

V_{IN} = 3.3V, V_{OUT} = 1.2V, I_{OUT} = 50 to 100mA

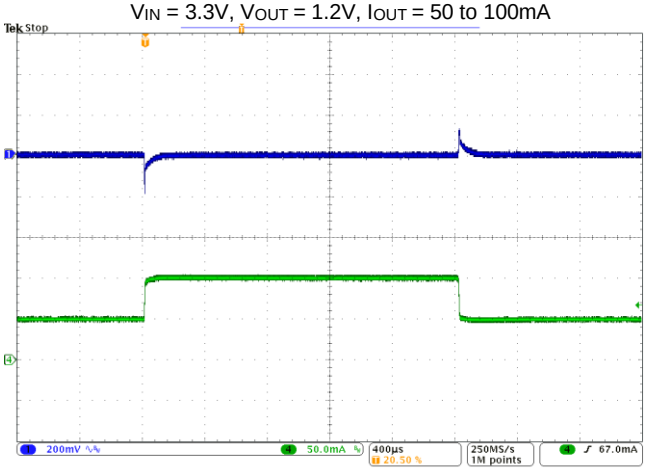

© Diodes Incorporated

Performance Characteristics (continued)

Load Transient Response (C_{IN} = C_{OUT} = 0.1µF, t_R = t_F = 5.0µs, unless otherwise specified.)

V_{IN} = 4.3V, V_{OUT} = 3.3V, I_{OUT} = 1 to 50mA

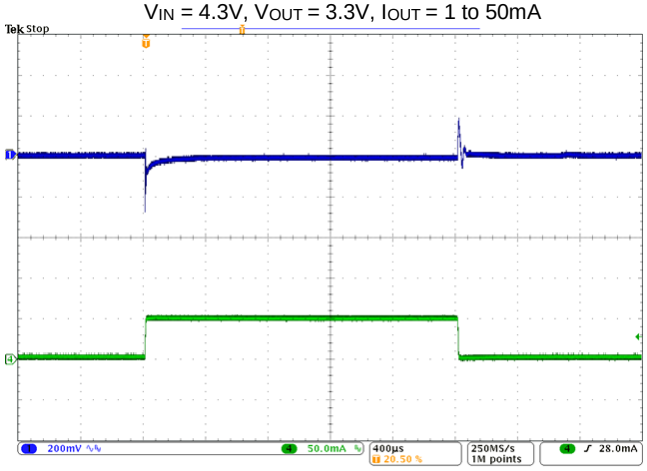

Turn On

V_{IN} = 4.3V, V_{OUT} = 3.3V, I_{OUT} = 50 to 100mA

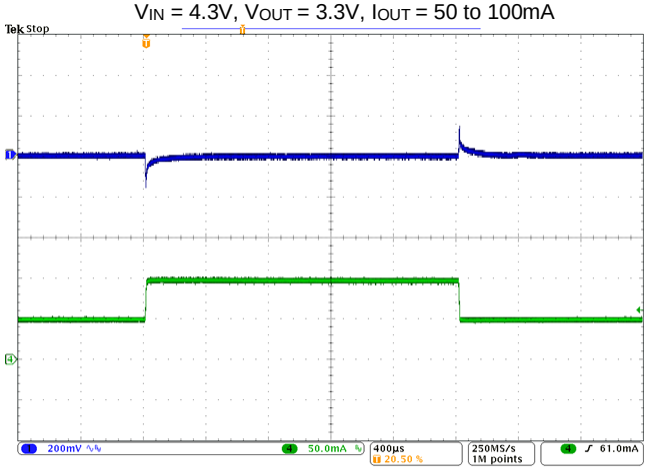

Turn Off

V_{IN} = 3.3V, V_{OUT} = 1.2V, I_{OUT} = 0mA, C_{IN} = C_{OUT} = 0.1µF

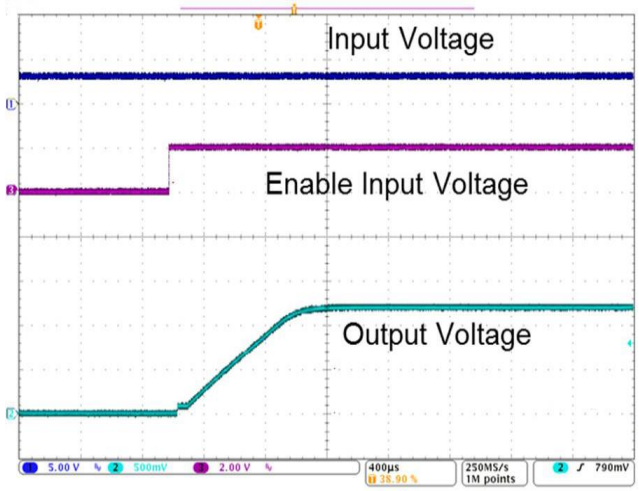

V_{IN} = 3.3V, V_{OUT} = 1.2V, I_{OUT} = 0mA, C_{IN} = C_{OUT} = 0.1µF

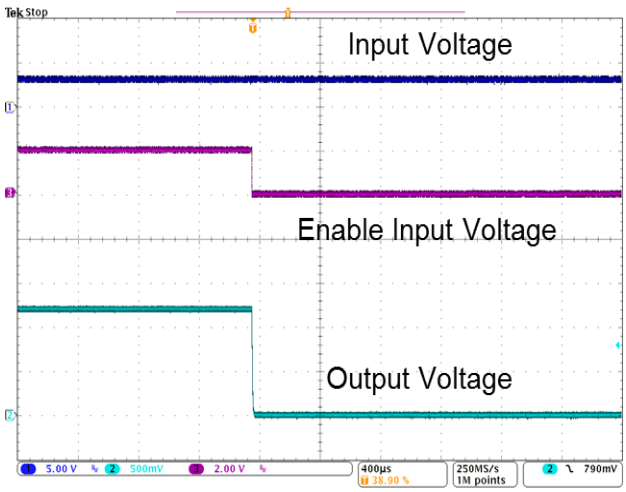

V_{IN} = 3.3V, V_{OUT} = 1.2V, I_{OUT} = 150mA, C_{IN} = C_{OUT} = 0.1µF

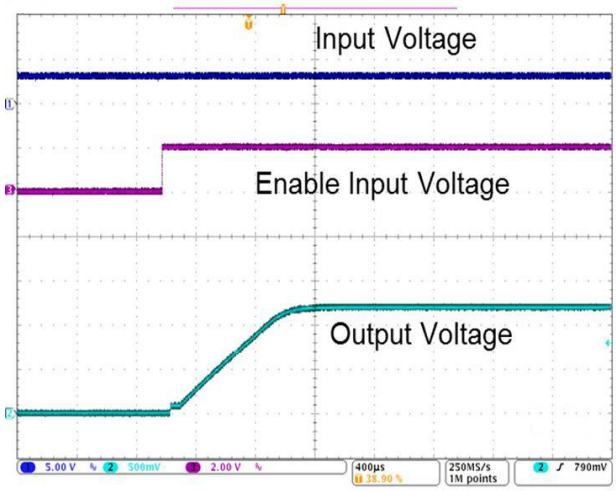

V_{IN} = 3.3V, V_{OUT} = 1.2V, I_{OUT} = 150mA, C_{IN} = C_{OUT} = 0.1µF

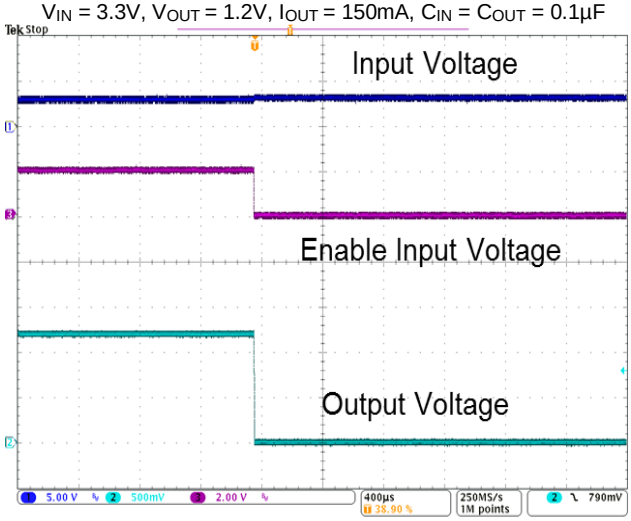

© Diodes Incorporated

Performance Characteristics (continued)

Turn On

V_{IN} = 4.3V, V_{OUT} = 3.3V, I_{OUT} = 0mA, C_{IN} = C_{OUT} = 0.1µF

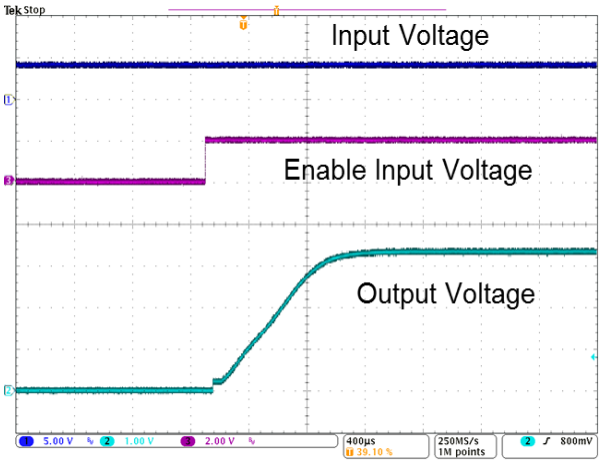

V_{IN} = 4.3V, V_{OUT} = 3.3V, I_{OUT} = 150mA, C_{IN} = C_{OUT} = 0.1µF

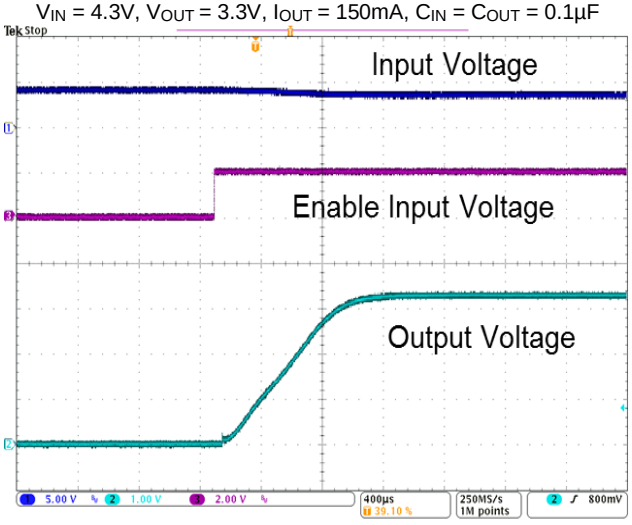

Turn Off

V_{IN} = 4.3V, V_{OUT} = 3.3V, I_{OUT} = 0mA, C_{IN} = C_{OUT} = 0.1µF

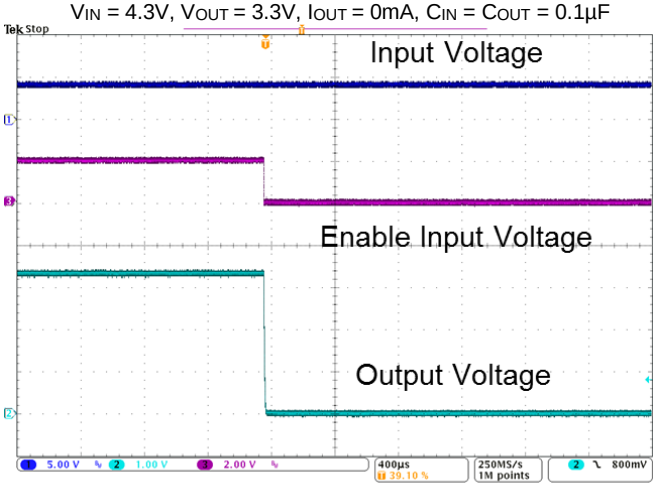

V_{IN} = 4.3V, V_{OUT} = 3.3V, I_{OUT} = 150mA, C_{IN} = C_{OUT} = 0.1µF

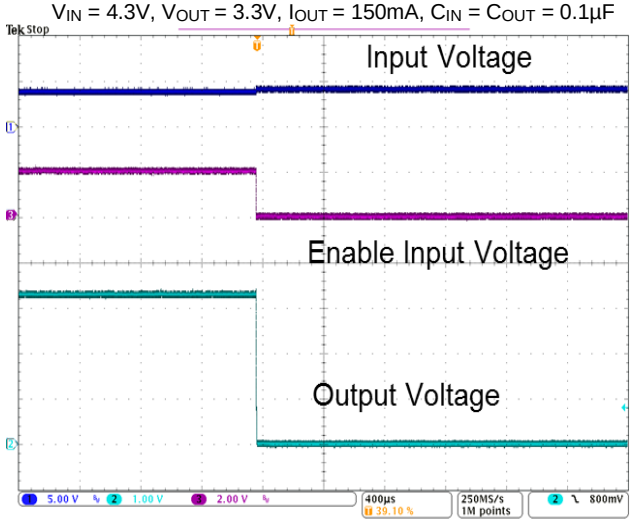

© Diodes Incorporated

Application Information

Output Capacitor

An output capacitor (C_{OUT}) is needed to improve transient response and maintain stability. The AP7350 is stable with very small ceramic output capacitors. The ESR (Equivalent Series Resistance) and capacitance drive the selection. If the application has large load variations, it is recommended to utilize low-ESR bulk capacitors. It is recommended to place ceramic capacitors as close as possible to the load and the GND pin and care should be taken to reduce the impedance in the layout.

Input Capacitor

To prevent the input voltage from dropping during load steps, it is recommended to utilize an input capacitor (C_{IN}). A minimum 0.1µF ceramic capacitor is recommended between V_{IN} and GND pin to decouple input power supply glitch. This input capacitor must be located as close as possible to the device to assure input stability and reduce noise. For PCB layout, a wide copper trace is required for both V_{IN} and GND pin.

Enable Control

The AP7350 is turned on by setting the EN pin high, and is turned off by pulling it low. If this feature is not used, the EN pin should be tied to V_{IN} pin to keep the regulator output on at all time. To ensure proper operation, the signal source used to drive the EN pin must be able to swing above and below the specified turn-on/off voltage thresholds listed in the *Electrical Characteristics* section.

Layout Considerations

For good ground loop and stability, the input and output capacitors should be located close to the input, output, and GND pin of the device. The regulator GND pin should be connected to the external circuit ground to reduce voltage drop caused by trace impedance. Ground plane is generally used to reduce trace impedance. Wide trace should be used for large current paths from V_{IN} to V_{OUT}, and load circuit.

ESR vs. Output Current

A ceramic type output capacitor is recommended for this series; however, the other output capacitors with low ESR also can be used. The relations between I_{OUT} (Output Current) and ESR of an output capacitor are shown below. The stable region is marked as the hatched area in the graph. Measurement conditions: Frequency Band: 10Hz to 2MHz, Temperature: -40°C to +85°C.

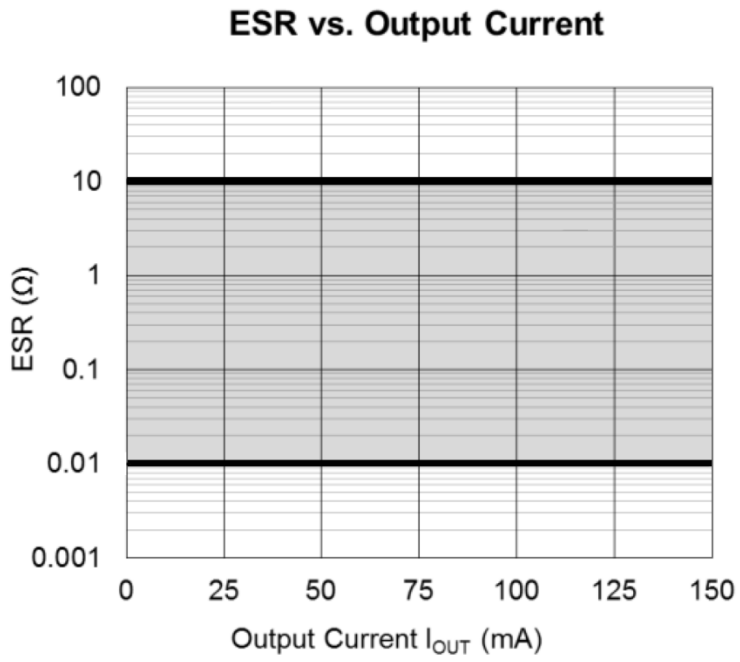

© Diodes Incorporated

Ordering Information (Note 13)

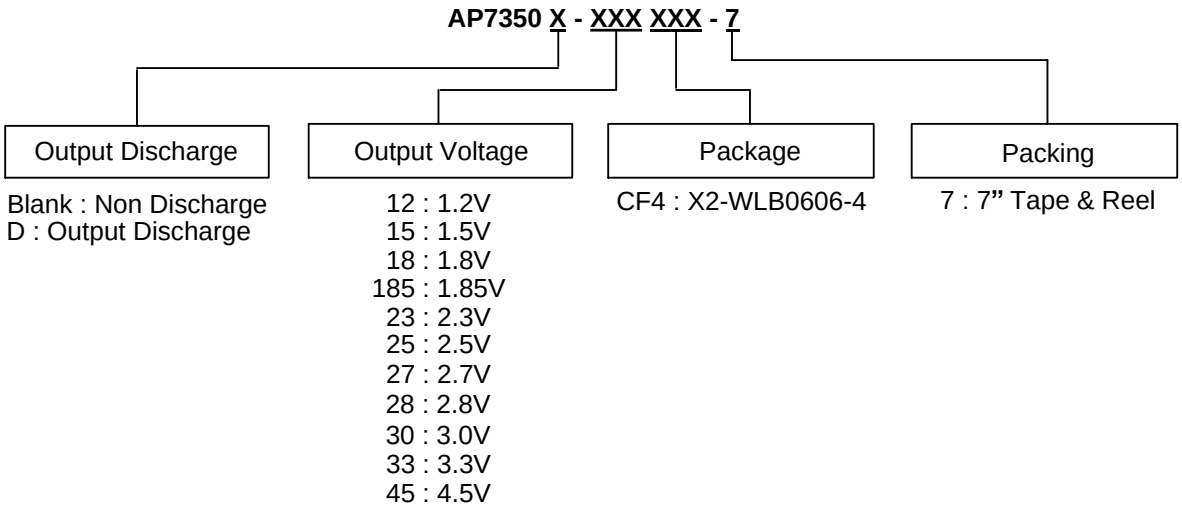

Device Without Discharge	Device With Discharge	Output Voltage	Package Code	Package	7" Tape and Reel	
					Quantity	Part Number Suffix
AP7350-12CF4-7	AP7350D-12CF4-7	1.2	CF4	X2-WLB0606-4	3,000/Tape & Reel	-7
AP7350-15CF4-7	AP7350D-15CF4-7	1.5	CF4	X2-WLB0606-4	3,000/Tape & Reel	-7
AP7350-18CF4-7	AP7350D-18CF4-7	1.8	CF4	X2-WLB0606-4	3,000/Tape & Reel	-7
AP7350-185CF4-7	AP7350D-185CF4-7	1.85	CF4	X2-WLB0606-4	3,000/Tape & Reel	-7
AP7350-23CF4-7	AP7350D-23CF4-7	2.3	CF4	X2-WLB0606-4	3,000/Tape & Reel	-7
AP7350-25CF4-7	AP7350D-25CF4-7	2.5	CF4	X2-WLB0606-4	3,000/Tape & Reel	-7
AP7350-27CF4-7	AP7350D-27CF4-7	2.7	CF4	X2-WLB0606-4	3,000/Tape & Reel	-7
AP7350-28CF4-7	AP7350D-28CF4-7	2.8	CF4	X2-WLB0606-4	3,000/Tape & Reel	-7
AP7350-30CF4-7	AP7350D-30CF4-7	3.0	CF4	X2-WLB0606-4	3,000/Tape & Reel	-7
AP7350-33CF4-7	AP7350D-33CF4-7	3.3	CF4	X2-WLB0606-4	3,000/Tape & Reel	-7
AP7350-45CF4-7	AP7350D-45CF4-7	4.5	CF4	X2-WLB0606-4	3,000/Tape & Reel	-7

Note: 13. For packaging details, go to our website at https://www.diodes.com/design/support/packaging/diodes-packaging/.

© Diodes Incorporated

Marking Information

(1) X2-WLB0606-4

(Top View)

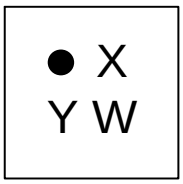

X or $\overline{X}$: Identification Code
Y : Year : 0~9
W : Week : A~Z : 1~26 week;
a~z : 27~52 week; z represents 52 and 53 week

Part Number	V_{OUT}	Package	Identification Code
AP7350-12CF4-7	1.2V	X2-WLB0606-4	A
AP7350-15CF4-7	1.5V	X2-WLB0606-4	B
AP7350-18CF4-7	1.8V	X2-WLB0606-4	C
AP7350-185CF4-7	1.85V	X2-WLB0606-4	R
AP7350-23CF4-7	2.3V	X2-WLB0606-4	9
AP7350-25CF4-7	2.5V	X2-WLB0606-4	D
AP7350-27CF4-7	2.7V	X2-WLB0606-4	$\overline{A}$
AP7350-28CF4-7	2.8V	X2-WLB0606-4	E
AP7350-30CF4-7	3.0V	X2-WLB0606-4	F
AP7350-33CF4-7	3.3V	X2-WLB0606-4	G
AP7350-45CF4-7	4.5V	X2-WLB0606-4	7
AP7350D-12CF4-7	1.2V	X2-WLB0606-4	H
AP7350D-15CF4-7	1.5V	X2-WLB0606-4	J
AP7350D-18CF4-7	1.8V	X2-WLB0606-4	K
AP7350D-185CF4-7	1.85V	X2-WLB0606-4	S
AP7350D-23CF4-7	2.3V	X2-WLB0606-4	$\overline{9}$
AP7350D-25CF4-7	2.5V	X2-WLB0606-4	L
AP7350D-27CF4-7	2.7V	X2-WLB0606-4	$\overline{B}$
AP7350D-28CF4-7	2.8V	X2-WLB0606-4	M
AP7350D-30CF4-7	3.0V	X2-WLB0606-4	N
AP7350D-33CF4-7	3.3V	X2-WLB0606-4	P
AP7350D-45CF4-7	4.5V	X2-WLB0606-4	8

© Diodes Incorporated

Package Outline Dimensions

Please see http://www.diodes.com/package-outlines.html for the latest version.

X2-WLB0606-4

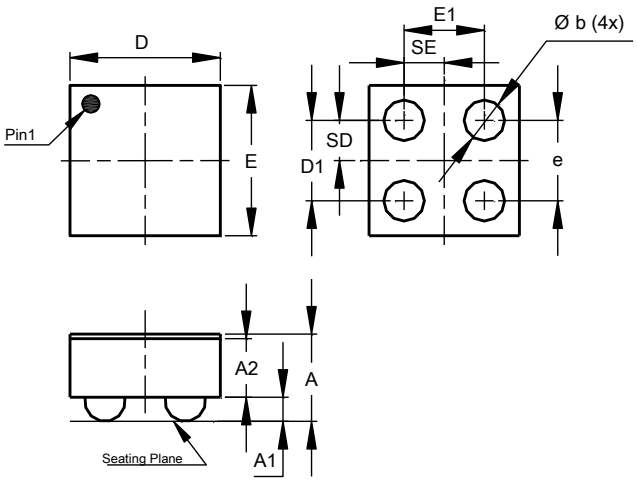

X2-WLB0606-4			
Dim	**Min**	**Max**	**Typ**
A	0.300	0.380	0.340
A1	0.075	0.105	0.090
A2	0.205	0.255	0.230
b	0.110	0.190	0.150
D	0.625	0.655	0.640
D1	0.300	0.400	0.350
E	0.625	0.655	0.640
E1	0.300	0.400	0.350
e	0.350 BSC		
SD	0.175 BSC		
SE	0.175 BSC		
All Dimensions in mm			

Suggested Pad Layout

Please see http://www.diodes.com/package-outlines.html for the latest version.

X2-WLB0606-4

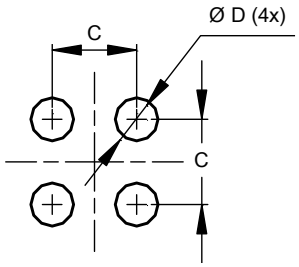

Dimensions	Value (in mm)
C	0.350
D	0.150

Tape Orientation

The taping orientation of the other package type can be found on our website at https://www.diodes.com/assets/Packaging-Support-Docs/Ap02007.pdf.

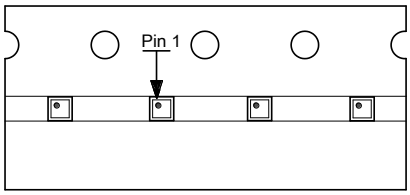

© Diodes Incorporated

IMPORTANT NOTICE

DIODES INCORPORATED MAKES NO WARRANTY OF ANY KIND, EXPRESS OR IMPLIED, WITH REGARDS TO THIS DOCUMENT, INCLUDING, BUT NOT LIMITED TO, THE IMPLIED WARRANTIES OF MERCHANTABILITY AND FITNESS FOR A PARTICULAR PURPOSE (AND THEIR EQUIVALENTS UNDER THE LAWS OF ANY JURISDICTION).

Diodes Incorporated and its subsidiaries reserve the right to make modifications, enhancements, improvements, corrections or other changes without further notice to this document and any product described herein. Diodes Incorporated does not assume any liability arising out of the application or use of this document or any product described herein; neither does Diodes Incorporated convey any license under its patent or trademark rights, nor the rights of others. Any Customer or user of this document or products described herein in such applications shall assume all risks of such use and will agree to hold Diodes Incorporated and all the companies whose products are represented on Diodes Incorporated website, harmless against all damages.

Diodes Incorporated does not warrant or accept any liability whatsoever in respect of any products purchased through unauthorized sales channel. Should Customers purchase or use Diodes Incorporated products for any unintended or unauthorized application, Customers shall indemnify and hold Diodes Incorporated and its representatives harmless against all claims, damages, expenses, and attorney fees arising out of, directly or indirectly, any claim of personal injury or death associated with such unintended or unauthorized application.

Products described herein may be covered by one or more United States, international or foreign patents pending. Product names and markings noted herein may also be covered by one or more United States, international or foreign trademarks.

This document is written in English but may be translated into multiple languages for reference. Only the English version of this document is the final and determinative format released by Diodes Incorporated.

LIFE SUPPORT

Diodes Incorporated products are specifically not authorized for use as critical components in life support devices or systems without the express written approval of the Chief Executive Officer of Diodes Incorporated. As used herein:

A. Life support devices or systems are devices or systems which:

1. are intended to implant into the body, or

2. support or sustain life and whose failure to perform when properly used in accordance with instructions for use provided in the labeling can be reasonably expected to result in significant injury to the user.

B. A critical component is any component in a life support device or system whose failure to perform can be reasonably expected to cause the failure of the life support device or to affect its safety or effectiveness.

Customers represent that they have all necessary expertise in the safety and regulatory ramifications of their life support devices or systems, and acknowledge and agree that they are solely responsible for all legal, regulatory and safety-related requirements concerning their products and any use of Diodes Incorporated products in such safety-critical, life support devices or systems, notwithstanding any devices- or systems-related information or support that may be provided by Diodes Incorporated. Further, Customers must fully indemnify Diodes Incorporated and its representatives against any damages arising out of the use of Diodes Incorporated products in such safety-critical, life support devices or systems.

Copyright © 2020, Diodes Incorporated

www.diodes.com

ENTEGRECİ

Bu belge www.entegreci.com üzerinden sunulmaktadır.

Elektronik komponent tedarikinde Entegreci

Entegreci, Eskişehir merkezli, Türkiye geneline satış yapan bir elektronik komponent mağazasıdır. Entegreler (IC), mikrodenetleyiciler, transistörler, diyotlar, pasif elemanlar, konnektörler, modüller ve geliştirme kartları tek adetten seri üretim adetlerine kadar satılır. Ürün sayfalarında güncel stok durumunu, fiyatı ve datasheet bağlantısını bulabilirsiniz.

Parça koduyla arama

Üretici parça numarasını yazın; stok ve fiyatı hemen görün.

www.entegreci.com

Ürün kategorileri

Entegreden kapasitöre tüm elektronik komponent kategorileri.

Kategorilere göz atın

Üreticiler

Aradığınız üreticinin ürünlerini tek sayfada inceleyin.

Üreticileri görün

Toplu alım ve teklif

Listede olmayan ya da yüksek adetli parçalar için teklif isteyin.

Teklif isteyin

www.entegreci.com | **destek@entegreci.com** | **0850 305 90 34**

Entegreci is an online electronic components store based in Türkiye. Search by manufacturer part number to see stock, prices and datasheets for integrated circuits, microcontrollers, transistors, passive components and connectors, or request a quote for parts that are not listed.

Bu sayfa Entegreci tarafından eklenmiştir. Belgenin önceki sayfaları asıl yayıncısına aittir ve içeriği değiştirilmemiştir; en güncel sürüm için belgenin yayıncısına başvurun.