250mA HIGH PSRR LOW NOISE LDO WITH ENABLE

Description

The DIODES™ AP7353 is a low dropout regulator with high output voltage accuracy, low R_{DSON}, high PSRR, low output noise, and low quiescent current. This regulator is based on a CMOS process.

The AP7353 includes a voltage reference, error amplifier, current-limit circuit, and an enable input to turn it on and off. With the integrated resistor network, fixed output voltage versions can be delivered.

With its high PSRR, good line regulation, and fast load transient response, the AP7353 is well suited for handheld/wearable communication equipment that require stable voltage sources.

The AP7353 is packaged in the X1-WLB0707-4 (Type A1) and X2-DFN1010-4 (Type B), which allow for a reduced footprint and denser PCB layout.

Features

- Low V_{IN} and Wide V_{IN} Range: 2.0V to 5.5V
- Guarantee Output Current, 250mA
- V_{OUT} Accuracy ±1%
- Ripple Rejection 90dB at 1kHz, I_{OUT} = 10mA
- Ripple Rejection 70dB at 10kHz, I_{OUT} = 250mA
- Low Output Noise, 10μVrms from 10Hz to 100kHz at 10mA
- Quiescent Current as Low as 18μA (Typ.)
- V_{OUT} Fixed 1.8V to 4.7V
- **Totally Lead-Free & Fully RoHS Compliant (Notes 1 & 2)**
- **Halogen and Antimony Free, Green Device (Note 3)**
- **For automotive applications requiring specific change control (i.e. parts qualified to AEC-Q100/101/104/200, PPAP capable, and manufactured in IATF 16949 certified facilities), please contact us or your local Diodes representative.**
  https://www.diodes.com/quality/product-definitions/

Pin Assignments

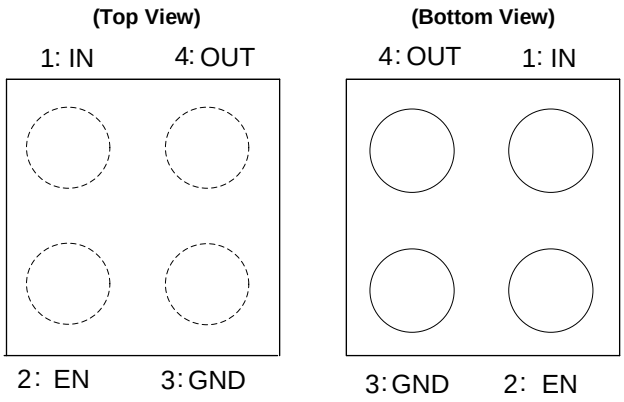

X1-WLB0707-4 (Type A1)

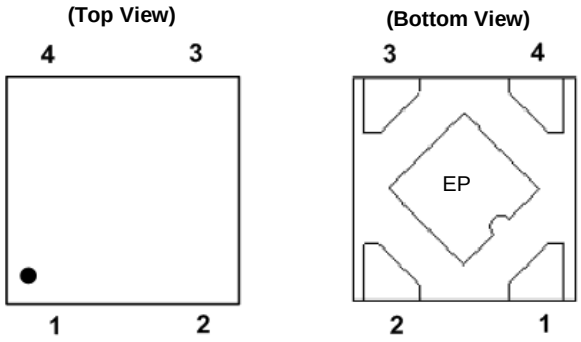

X2-DFN1010-4 (Type B)

PIN1 – OUT, PIN2 – GND, PIN3 – EN, PIN4 – IN

Applications

- Smartphones/PADs
- RF supplies
- Cameras
- Portable videos
- Portable media players
- Wireless adaptors
- Wireless communication

Notes:
1. No purposely added lead. Fully EU Directive 2002/95/EC (RoHS), 2011/65/EU (RoHS 2) & 2015/863/EU (RoHS 3) compliant.
2. See https://www.diodes.com/quality/lead-free/ for more information about Diodes Incorporated's definitions of Halogen- and Antimony-free, "Green" and Lead-free.
3. Halogen- and Antimony-free "Green" products are defined as those which contain <900ppm bromine, <900ppm chlorine (<1500ppm total Br + Cl) and <1000ppm antimony compounds.

© Diodes Incorporated

Typical Applications Circuit

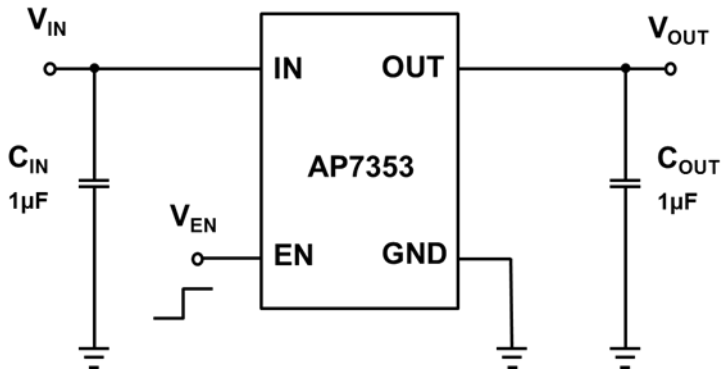

Pin Descriptions

Pin Name	Pin Number		Function
	X1-WLB0707-4 (Type A1)	X2-DFN1010-4 (Type B)	
IN	1	4	Power Input Pin
EN	2	3	Enable Pin This pin should be driven either high or low and must not be floating. Driving this pin high enables the regulator, while pulling it low puts the regulator into shutdown mode
GND	3	2	Ground
OUT	4	1	Power Output Pin
Exposed Pad	—	EP	In PCB layout, prefer to use large copper area to cover this pad for better thermal dissipation, then connect this area to GND or leave it open. However, do not use it as GND electrode function alone

© Diodes Incorporated

Functional Block Diagram

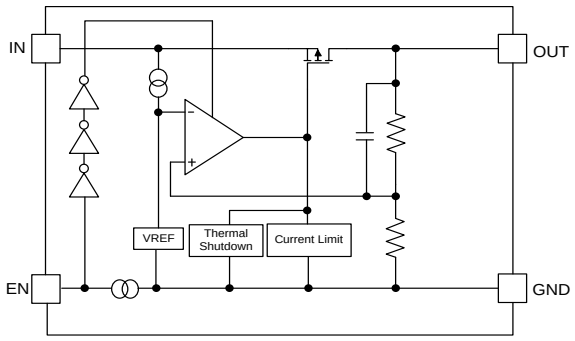

AP7353 (Non-Discharge)

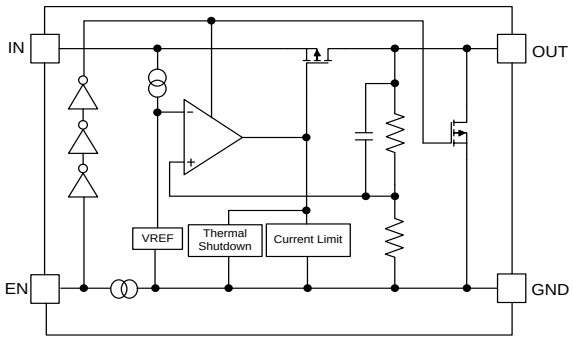

AP7353D (With Discharge)

Absolute Maximum Ratings (Note 4) (@ T_A = +25°C, unless otherwise specified.)

Symbol	Parameter		Ratings	Unit
ESD HBM	Human Body Mode ESD Protection		>2	kV
ESD CDM	Charge Device Model		±500	V
V_{IN}	Input Voltage		6.0	V
V_{EN}	Input Voltage EN		6.0	V
V_{OUT}	Output Voltage		-0.3 to 6.0	V
I_{OUT}	Output Current		250	mA
P_D	Power Dissipation (Note 5)	X1-WLB0707-4	650	mW
		X2-DFN1010-4	400	
T_A	Operating Ambient Temperature		-40 to +85	°C
T_J	Operating Junction Temperature		+125	°C
T_{STG}	Storage Temperature		-55 to +150	°C

Notes:
4. Stresses beyond those listed under *Absolute Maximum Ratings* can cause permanent damage to the device. These are stress ratings only and functional operation of the device at these conditions is not implied. Exposure to absolute-maximum-rated conditions for extended periods can affect device reliability.
5. Stresses beyond those listed under Absolute Maximum Ratings can cause permanent damage to the device. These are stress ratings only and functional operation of the device at these conditions is not implied. Exposure to absolute-maximum-rated conditions for extended period may affect device reliability. Ratings apply to ambient temperature at +25°C. The JEDEC High-K board design used to derive this data was a 2 inch × 2 inch multilayer board with 1oz. internal power and ground planes and 2oz. copper traces on the top and bottom of the board

Recommended Operating Conditions (@ T_A = +25°C, unless otherwise specified.)

Symbol	Parameter	Min	Max	Unit
V_{IN}	Input Voltage	2.0	5.5	V
I_{OUT}	Output Current	0	250	mA
T_A	Operating Ambient Temperature	-40	+85	°C

© Diodes Incorporated

Electrical Characteristics (@ V_{EN} = V_{IN} = V_{OUT} +1.0V, or V_{IN}=5.5V (for V_{OUT}=4.7V), C_{IN} = C_{OUT} = 1µF, I_{OUT} = 1.0mA @T_A = +25°C, unless otherwise specified.)

Parameter	Conditions		Min	Typ	Max	Unit
Input Voltage	T_A = -40°C to +85°C		2.0	—	5.5	V
Output Voltage Accuracy (Note 11)	V_{IN} = (V_{OUT_Nom} +1.0V) to 5.5V, I_{OUT} = 1mA to 250mA		-1	—	+1	%
Line Regulation ($dV_{OUT}/dV_{IN}/V_{OUT}$)	V_{IN} = (V_{OUT_Nom} +1.0V) to 5.5V		—	0.02	—	%/V
Load Regulation ($dV_{OUT}/V_{OUT}/dI_{OUT}$) X1-WLB0707-4 (Type A1)	V_{IN} = V_{OUT_Nom} +1.0V, or V_{IN}=5.5V (for V_{OUT}=4.7V), I_{OUT} = 1mA to 250mA		—	0.001	—	%/mA
Load Regulation ($dV_{OUT}/V_{OUT}/dI_{OUT}$) X2-DFN1010-4 (Type B)	V_{IN} = V_{OUT_Nom} +1.0V, I_{OUT} = 1mA to 250mA		—	0.004	—	%/mA
Quiescent Current (Note 7)	I_{OUT} = 0mA, V_{EN} = 1.2V		—	18	27	µA
Standby Current ($I_{STANDBY}$)	V_{EN} = 0V (Disabled)		—	0.1	1.0	µA
Output Current	—		—	—	250	mA
Output Current Limit	V_{OUT} = 90% V_{OUT}		260	—	—	mA
PSRR (Note 8)	V_{IN} = [V_{OUT}+1V, or V_{IN}=5.5V (for V_{OUT}=4.7V)] VDC + 0.2Vp-pAC, V_{OUT} ≥ 1.8V, I_{OUT} = 10mA	f = 100Hz	—	90	—	dB
		f = 1kHz	—	90	—	
		f = 10kHz	—	70	—	
Output Noise Voltage (Note 8) (Note 9)	BW = 10Hz to 100kHz, I_{OUT} = 10mA		—	10	—	µVrms
Dropout Voltage (Note 6) X1-WLB0707-4 (Type A1)	I_{OUT} = 250mA	V_{OUT} = 1.8V	—	115	237	mV
		V_{OUT} = 2.5V	—	75	166	
		V_{OUT} = 2.8V	—	73	152	
		V_{OUT} = 2.85V	—	73	152	
		V_{OUT} = 2.9V	—	71	150	
		V_{OUT} = 3.0V	—	68	147	
		V_{OUT} = 3.1V	—	68	147	
		V_{OUT} = 3.2V	—	67	142	
		V_{OUT} = 3.3V	—	65	138	
		V_{OUT} = 3.6V	—	60	119	
		V_{OUT} = 4.5V	—	55	114	
		V_{OUT} = 4.7V	—	50	110	
Dropout Voltage (Note 6) X2-DFN1010-4 (Type B)	I_{OUT} = 250mA	V_{OUT} = 1.8V	—	130	240	mV
		V_{OUT} = 2.5V	—	95	168	
		V_{OUT} = 2.8V	—	92	155	
		V_{OUT} = 2.85V	—	92	155	
		V_{OUT} = 2.9V	—	91	153	
		V_{OUT} = 3.0V	—	88	150	
		V_{OUT} = 3.1V	—	88	150	
		V_{OUT} = 3.2V	—	87	146	
		V_{OUT} = 3.3V	—	85	142	
		V_{OUT} = 3.6V	—	79	122	
		V_{OUT} = 4.5V	—	74	117	
Output Voltage Temperature Coefficient	I_{OUT} = 30mA, T_A = -40°C to +85°C		—	±30	—	ppm/°C
Turn-On Time	90% of Typical V_{OUT}		—	180	—	µs
EN Input Low Voltage	—		0.0	—	0.4	V
EN Input High Voltage	—		1.2	—	5.5	V
EN Input Leakage	V_{EN} = 0, V_{IN} = 5.0V or V_{EN} = 5.0V, V_{IN} = 0V		-1.0	—	+1.0	µA
On Resistance of N-Channel for Auto-Discharge (Note 10)	V_{IN} = V_{OUT_Nom} +1.0V, or V_{IN}=5.5V (for V_{OUT}=4.7V), V_{EN} = 0V (Disabled)		—	35	—	Ω
Thermal Resistance Junction to Ambient (θ_{JA})	X1-WLB0707-4		—	150	—	°C/W
	X2-DFN1010-4 (Type B)		—	237	—	

Notes:
6. Dropout voltage is the voltage difference between the input and the output at which the output voltage drops 2% below its nominal value.
7. Quiescent current is defined here as the difference in current between the input and the output.
8. This specification is guaranteed by design.
9. To make sure lowest environment noise minimizes the influence on noise measurement.
10. AP7353 has 2 options for output, built-in discharge and non-discharge.
11. Potential multiple grades based on following output voltage accuracy.

© Diodes Incorporated

Typical Performance Characteristics

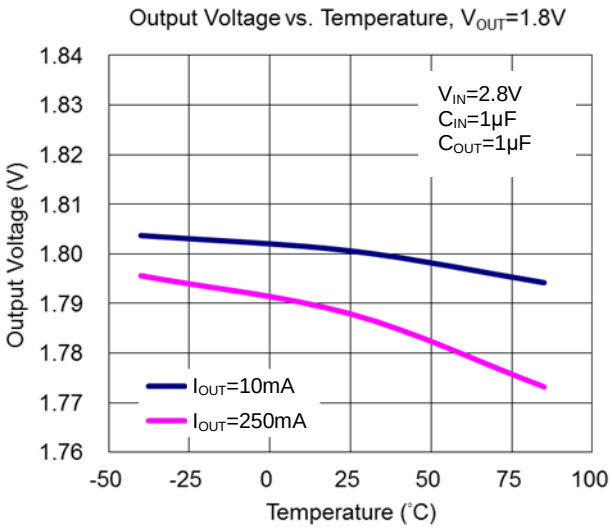

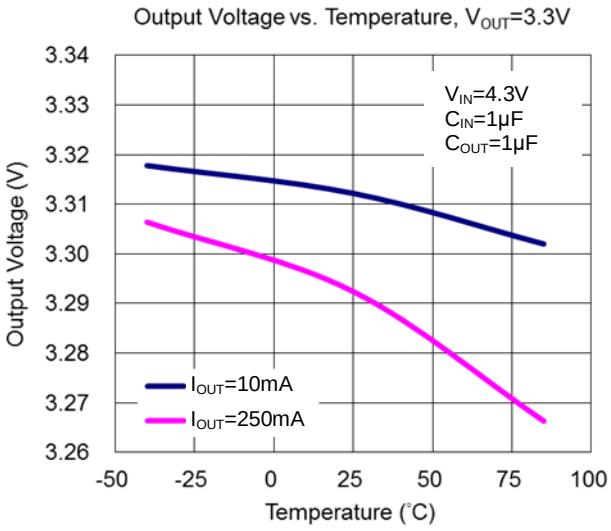

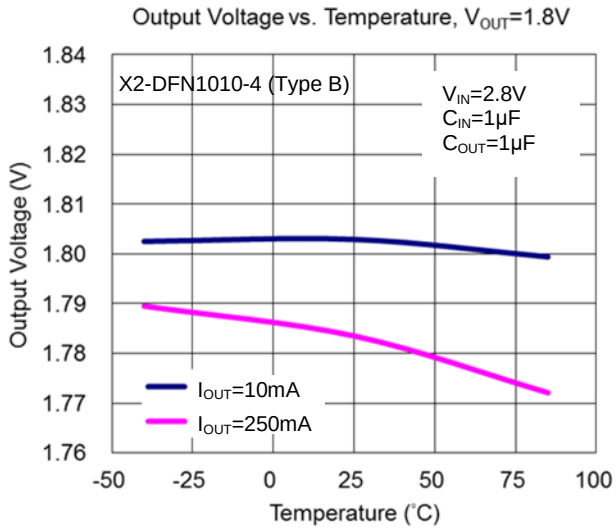

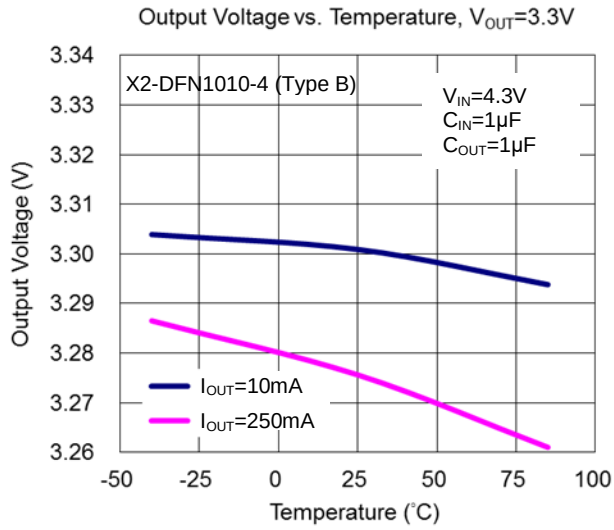

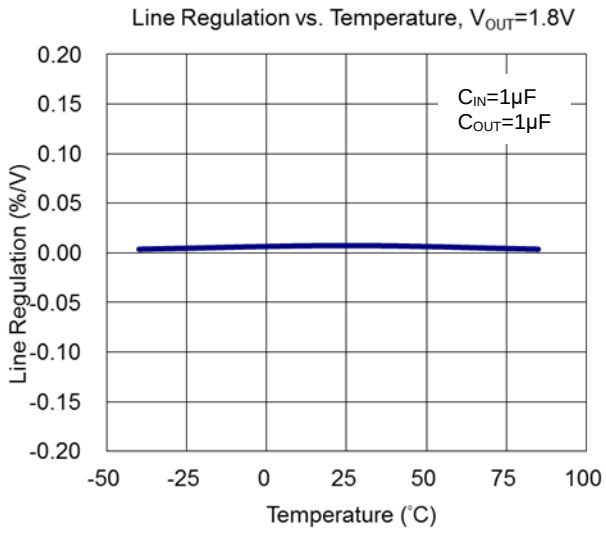

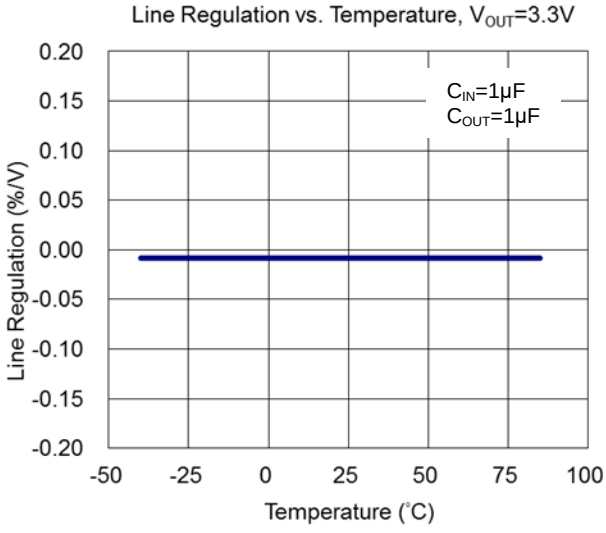

© Diodes Incorporated

Typical Performance Characteristics (continued)

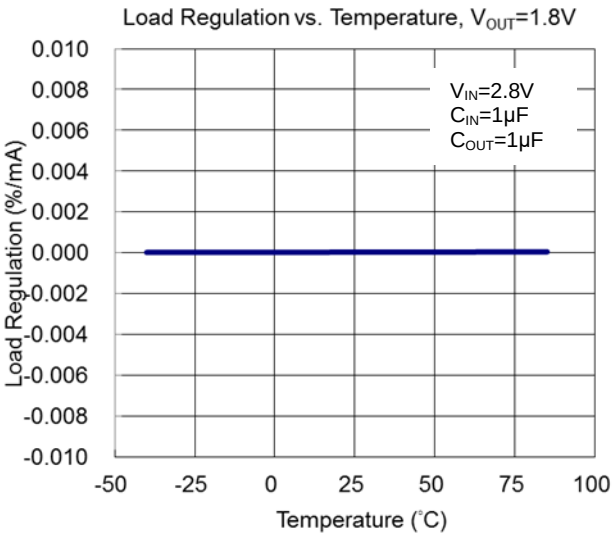

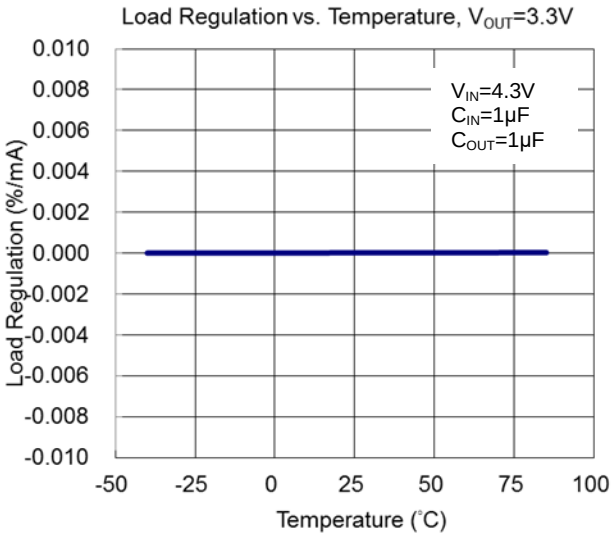

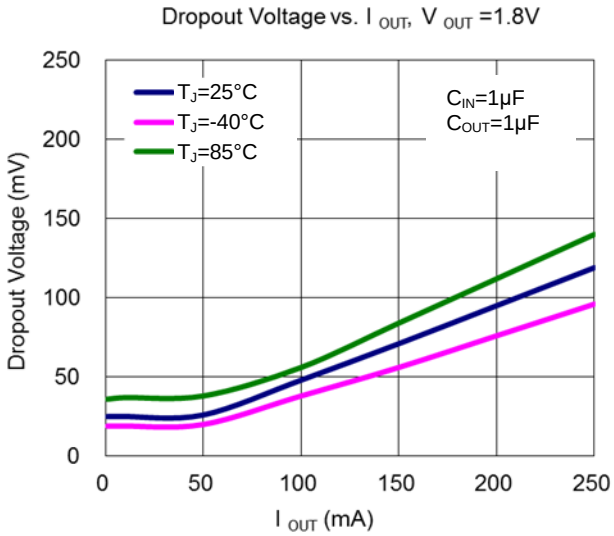

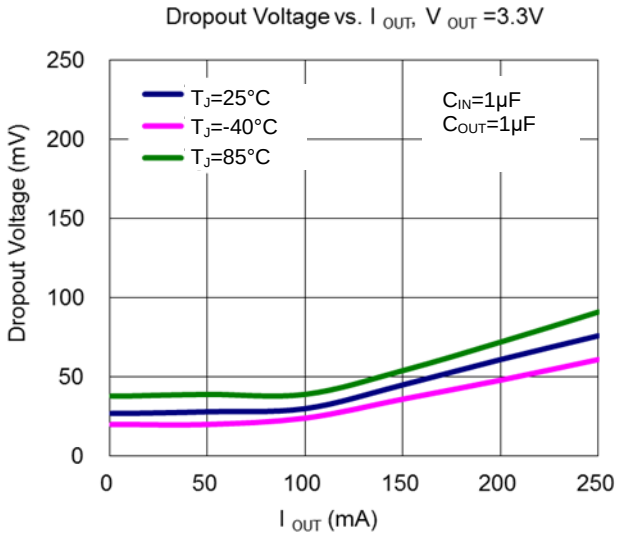

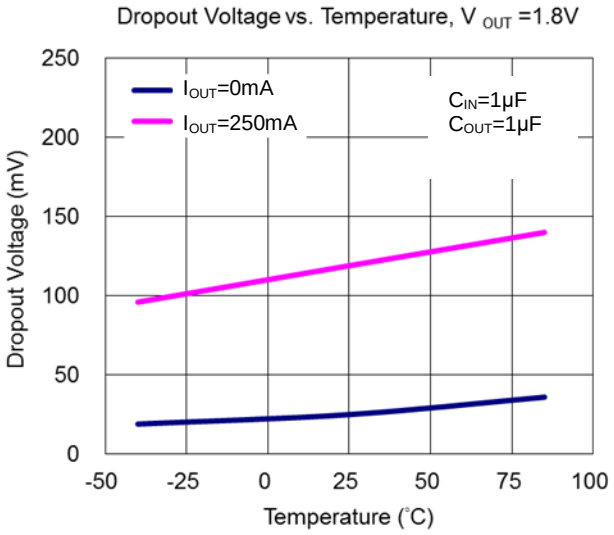

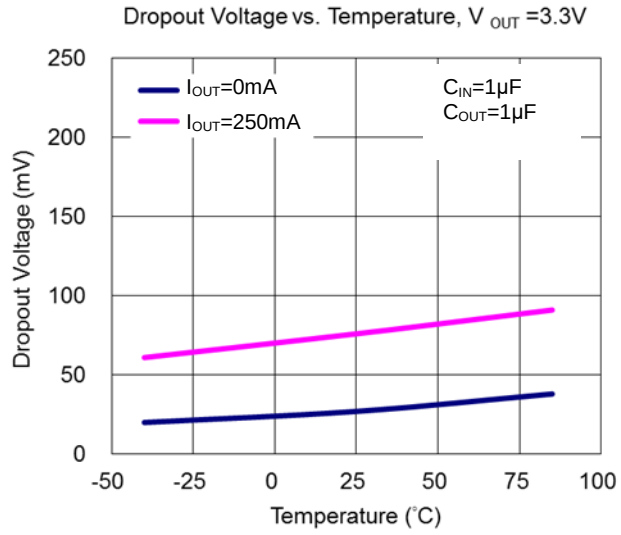

© Diodes Incorporated

Typical Performance Characteristics (continued)

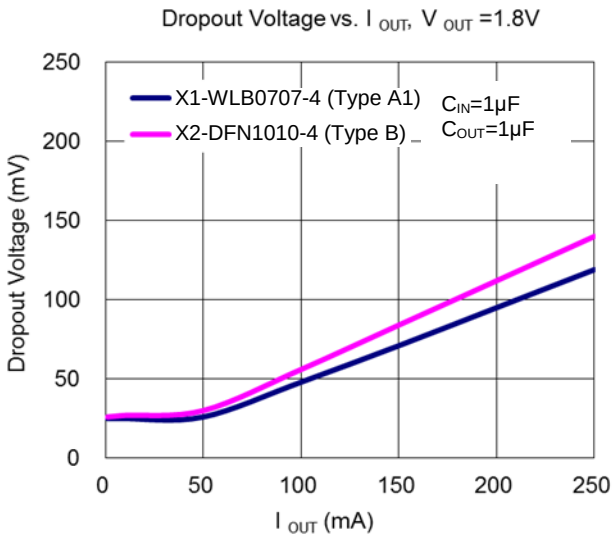

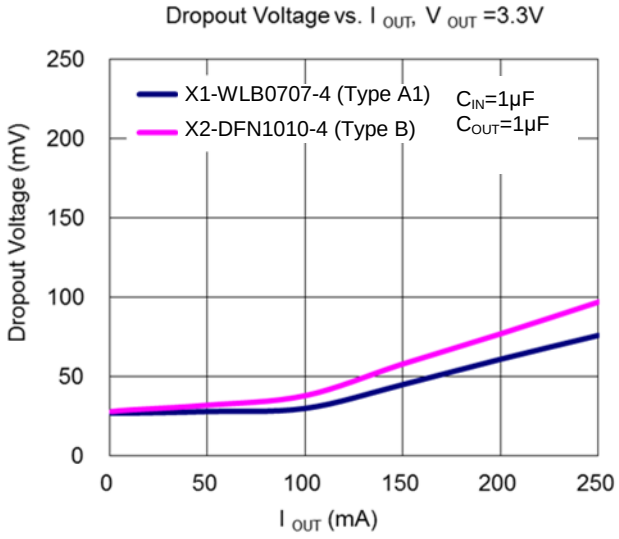

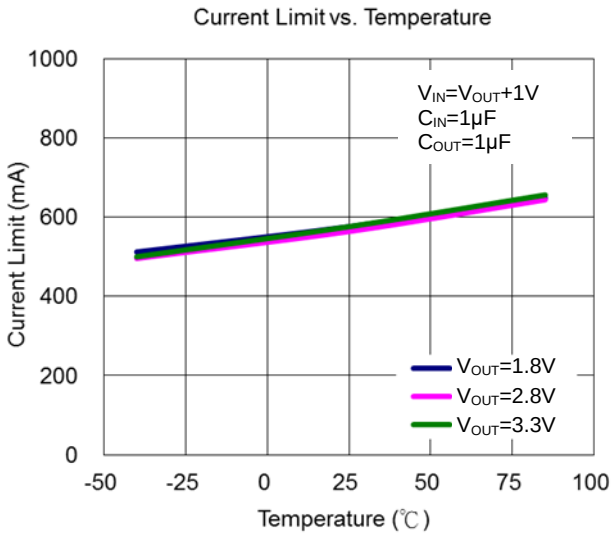

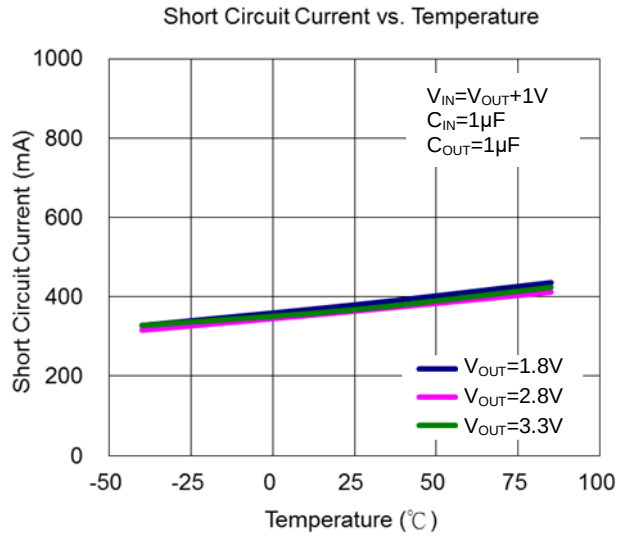

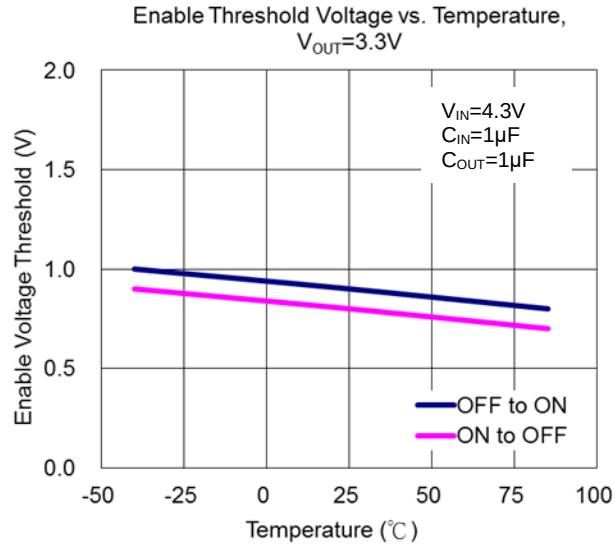

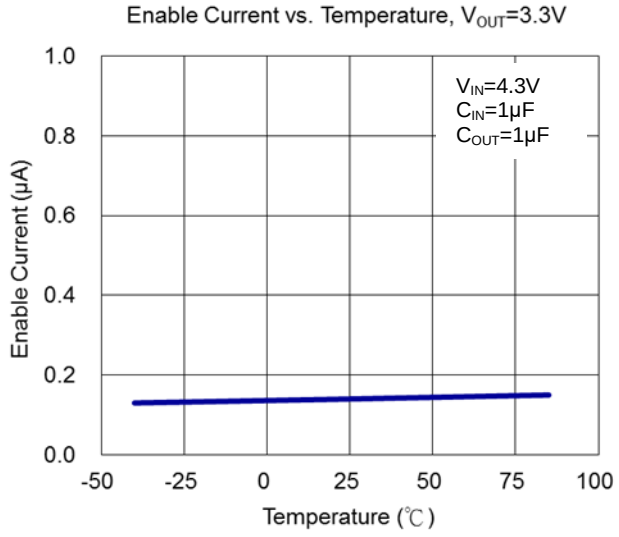

© Diodes Incorporated

Typical Performance Characteristics (continued)

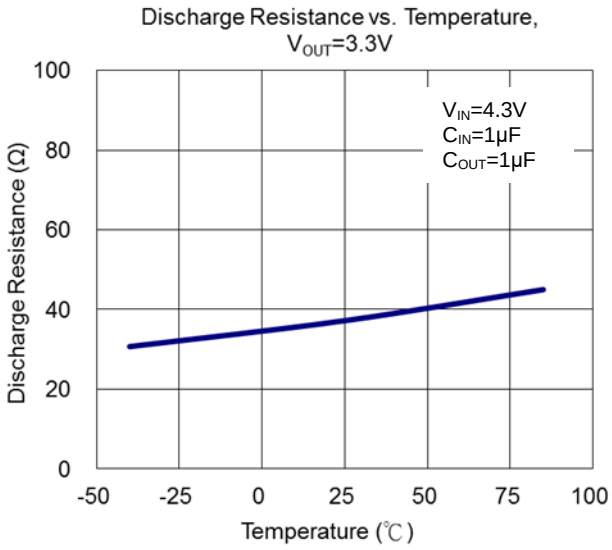

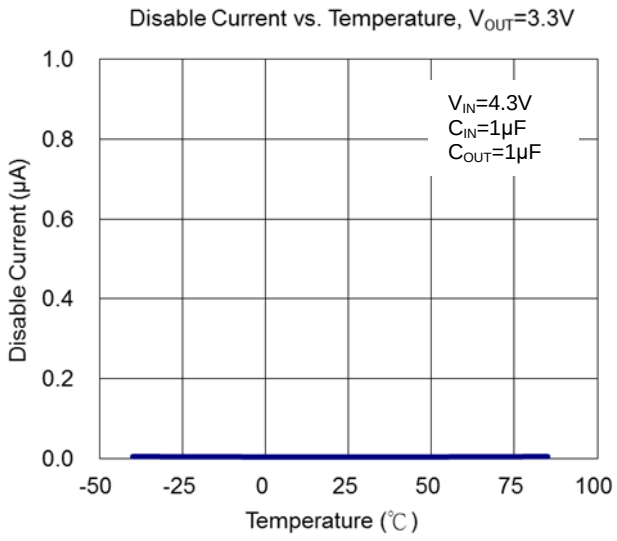

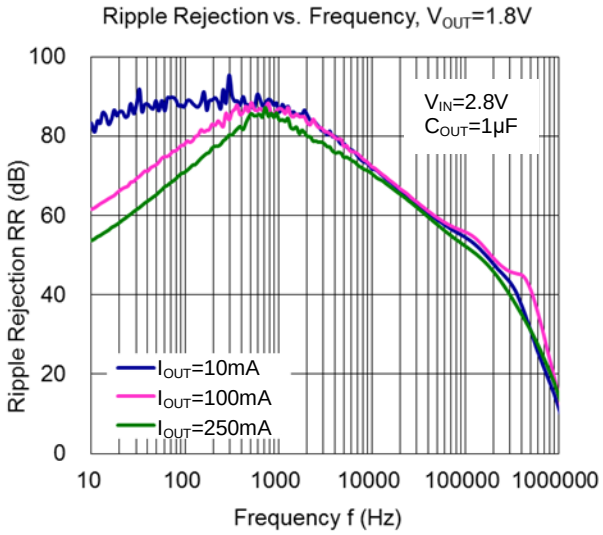

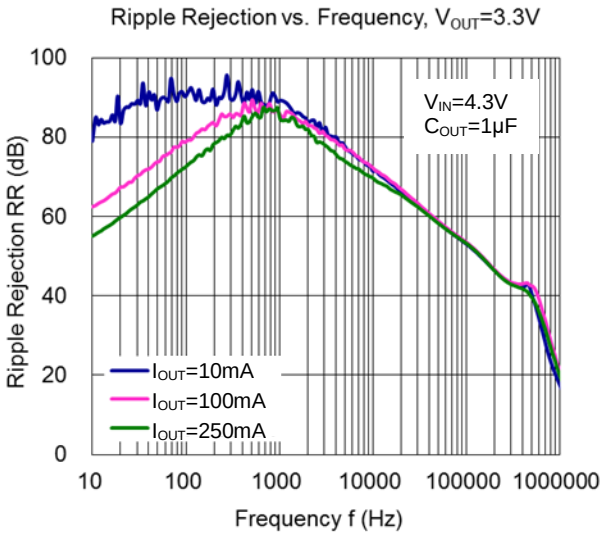

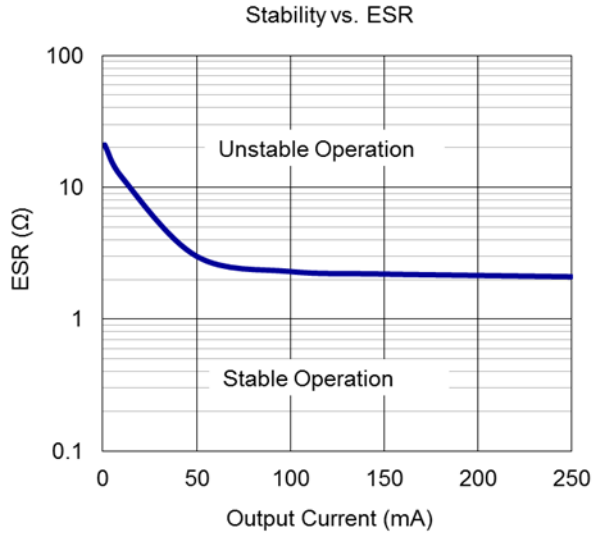

© Diodes Incorporated

Typical Performance Characteristics (continued)

Enable Turn-On Response

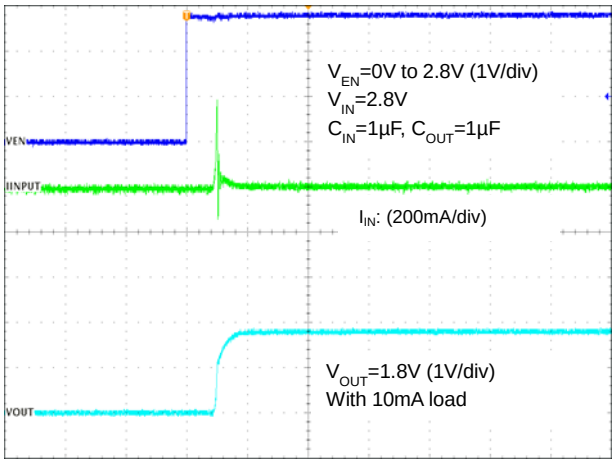

Time (100µs/div)

Enable Turn-On Response

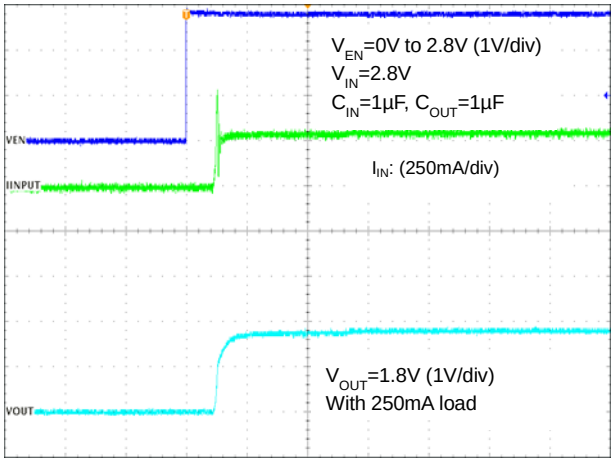

Time (100µs/div)

Line Transient Response

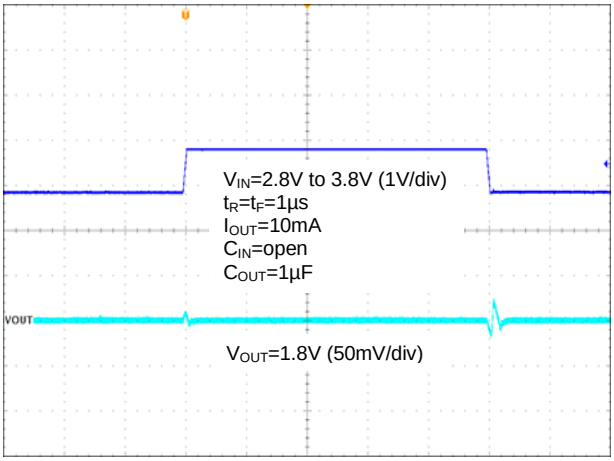

Time (40µs/div)

Line Transient Response

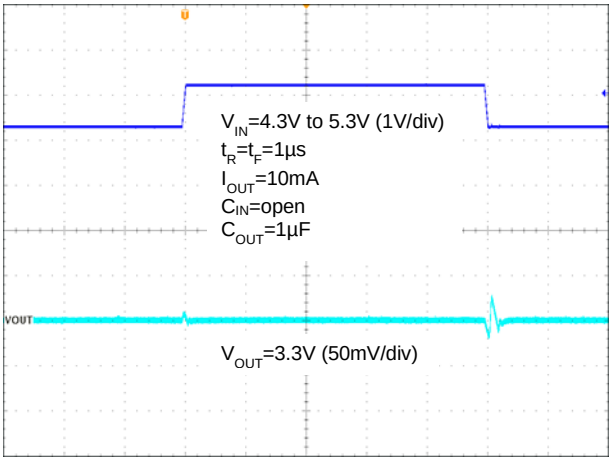

Time (40µs/div)

V_{IN} Slow Turn On

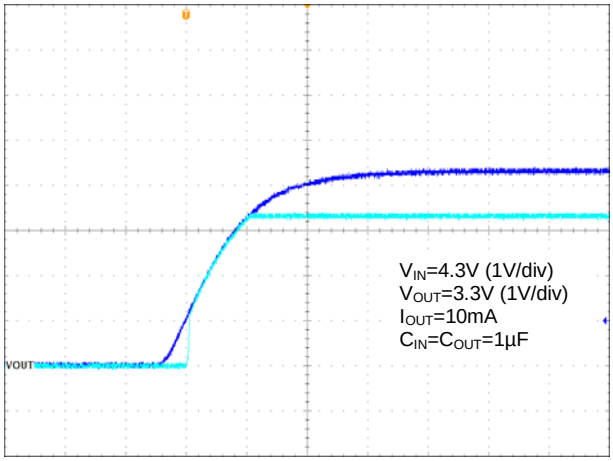

Time (4ms/div)

V_{IN} Slow Turn Off

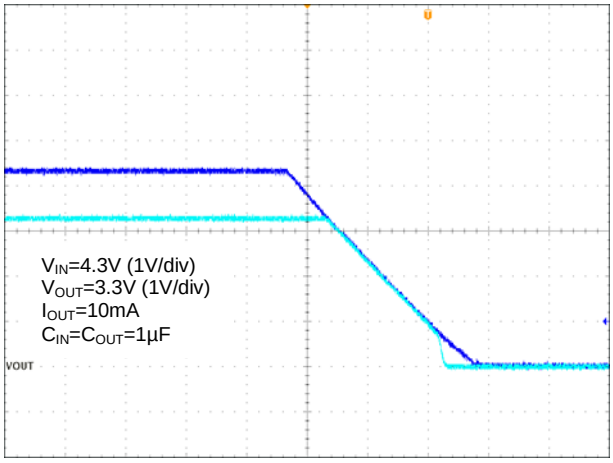

Time (4ms/div)

© Diodes Incorporated

Typical Performance Characteristics (continued)

Load Transient Response

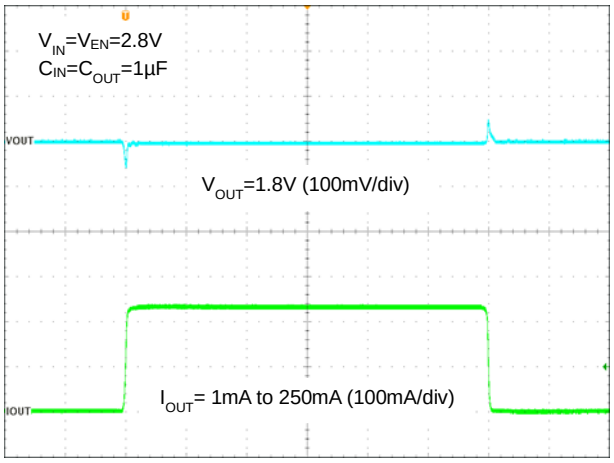

Time (20µs/div)

Load Transient Response

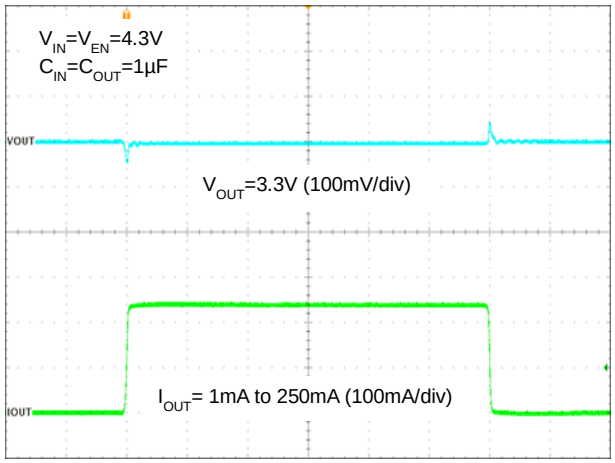

Time (20µs/div)

Short Circuit and Thermal Shutdown

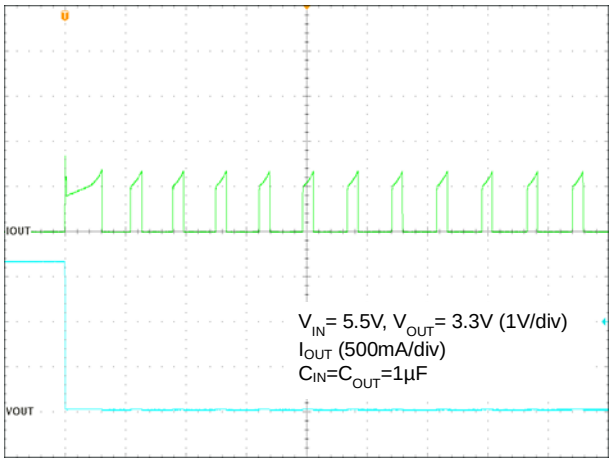

Time (20ms/div)

Enable Turn-Off

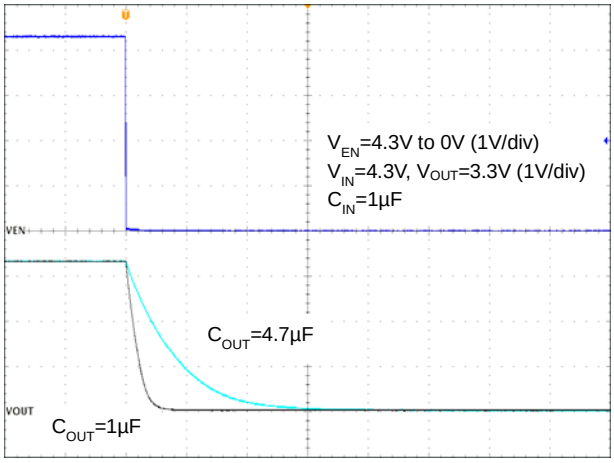

Time (400µs/div)

© Diodes Incorporated

Application Information

Overview

The AP7353 is a 250mA low dropout regulator which provides low noise, high PSRR, and low quiescent current. With low quiescent current, this device is suitable for battery-powered applications, RF applications, and high-performance analog circuits.

Output Capacitor

An output capacitor (C_{OUT}) is needed to improve transient response and maintain stability. The AP7353 is stable with very small ceramic output capacitors. The recommended capacitor value is 1µF with low temperature influence properties, such as X7R or X5R. The minimum effective capacitance to maintain stable operation of the AP7353 is 0.7µF, which accounts for changes of temperature, DC bias, and manufacturing tolerances. The ESR (equivalent series resistance) of C_{OUT} should be lower than 2Ω. If the application has large load variations, it is recommended to utilize low-ESR capacitors. It is recommended to place ceramic capacitors as close as possible to the OUT pin and the ground pin, and care should be taken to reduce the impedance in the layout.

Input Capacitor

To prevent the input voltage from dropping during load steps, it is recommended to utilize an input capacitor (C_{IN}). A minimum 1µF ceramic capacitor is recommended between IN and GND pins to decouple input power supply glitch. This input capacitor must be located as close as possible to the device to ensure input stability and reduce noise. For PCB layout, a wide copper trace is required for both IN and GND pins.

Enable Control

The AP7353 is turned on by setting the EN pin high, and is turned off by pulling it low. If this feature is not used, the EN pin should be tied to the IN pin to keep the regulator output on at all times. To ensure proper operation, the signal source used to drive the EN pin must be able to swing above and below the specified turn-on/off voltage thresholds listed in the *Electrical Characteristics* section.

Short-Circuit Protection

When the OUT pin is short-circuited to the GND, short-circuit protection will be triggered and clamp the output current to approximately 350mA. This feature protects the regulator from overcurrent and overheating damage.

Layout Considerations

For good ground loop and stability, the input and output capacitors should be located close to the IN, OUT, and GND pins of the device. The regulator GND pin should be connected to the external circuit ground to reduce voltage drop caused by trace impedance. Ground plane is generally used to reduce trace impedance. Wide trace should be used for large current paths from V_{IN} to V_{OUT}, and load circuit.

© Diodes Incorporated

Ordering Information

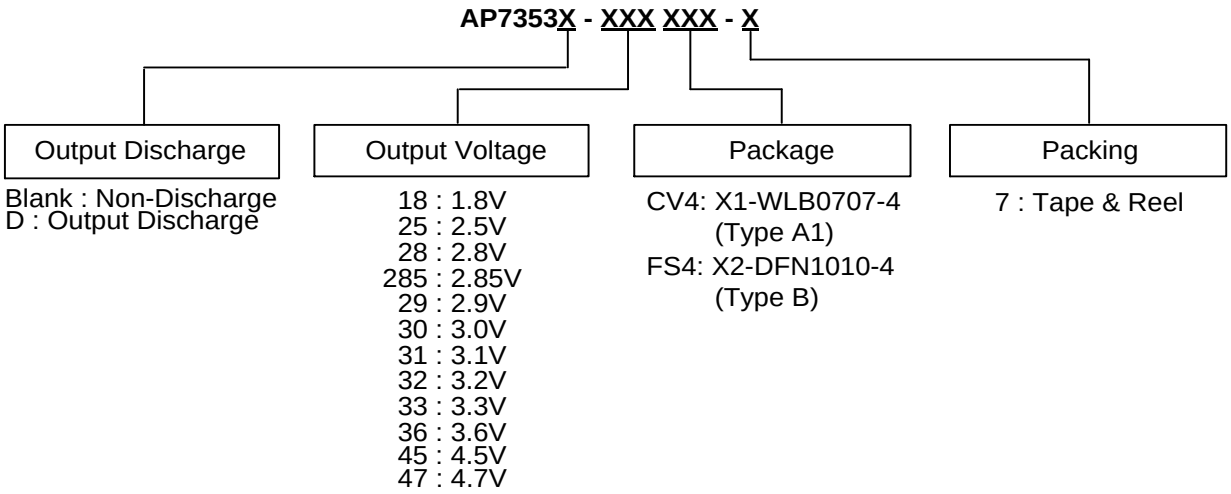

Part Number	Package Code	Package	7" Tape and Reel	
			Quantity	Part Number Suffix
AP7353-XXCV4-7	CV4	X1-WLB0707-4 (Type A1)	3,000/Tape & Reel	-7
AP7353-XXXCV4-7	CV4	X1-WLB0707-4 (Type A1)	3,000/Tape & Reel	-7
AP7353-XXFS4-7	FS4	X2-DFN1010-4 (Type B)	5,000/Tape & Reel	-7
AP7353-XXXFS4-7	FS4	X2-DFN1010-4 (Type B)	5,000/Tape & Reel	-7
AP7353D-XXCV4-7	CV4	X1-WLB0707-4 (Type A1)	3,000/Tape & Reel	-7
AP7353D-XXXCV4-7	CV4	X1-WLB0707-4 (Type A1)	3,000/Tape & Reel	-7
AP7353D-XXFS4-7	FS4	X2-DFN1010-4 (Type B)	5,000/Tape & Reel	-7
AP7353D-XXXFS4-7	FS4	X2-DFN1010-4 (Type B)	5,000/Tape & Reel	-7

© Diodes Incorporated

Marking Information

(1) X1-WLB0707-4 (Type A1)

(Top View)

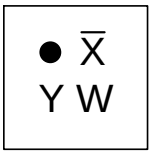

$\overline{X}$: Identification Code
Y : Year : 0~9
W : Week : A~Z : 1~26 week;
a~z : 27~52 week; z represents
52 and 53 week

Part Number	Package	Identification Code
AP7353-18CV4-7	X1-WLB0707-4 (Type A1)	$\overline{D}$
AP7353-25CV4-7	X1-WLB0707-4 (Type A1)	$\overline{E}$
AP7353-28CV4-7	X1-WLB0707-4 (Type A1)	$\overline{F}$
AP7353-285CV4-7	X1-WLB0707-4 (Type A1)	$\overline{G}$
AP7353-29CV4-7	X1-WLB0707-4 (Type A1)	$\overline{H}$
AP7353-30CV4-7	X1-WLB0707-4 (Type A1)	$\overline{J}$
AP7353-31CV4-7	X1-WLB0707-4 (Type A1)	$\overline{K}$
AP7353-32CV4-7	X1-WLB0707-4 (Type A1)	$\overline{L}$
AP7353-33CV4-7	X1-WLB0707-4 (Type A1)	$\overline{M}$
AP7353-36CV4-7	X1-WLB0707-4 (Type A1)	$\overline{N}$
AP7353-45CV4-7	X1-WLB0707-4 (Type A1)	$\overline{P}$
AP7353D-18CV4-7	X1-WLB0707-4 (Type A1)	$\overline{R}$
AP7353D-25CV4-7	X1-WLB0707-4 (Type A1)	$\overline{S}$
AP7353D-28CV4-7	X1-WLB0707-4 (Type A1)	$\overline{T}$
AP7353D-285CV4-7	X1-WLB0707-4 (Type A1)	$\overline{U}$
AP7353D-29CV4-7	X1-WLB0707-4 (Type A1)	$\overline{V}$
AP7353D-30CV4-7	X1-WLB0707-4 (Type A1)	$\overline{W}$
AP7353D-31CV4-7	X1-WLB0707-4 (Type A1)	$\overline{X}$
AP7353D-32CV4-7	X1-WLB0707-4 (Type A1)	$\overline{Y}$
AP7353D-33CV4-7	X1-WLB0707-4 (Type A1)	$\overline{Z}$
AP7353D-36CV4-7	X1-WLB0707-4 (Type A1)	$\overline{2}$
AP7353D-45CV4-7	X1-WLB0707-4 (Type A1)	$\overline{3}$
AP7353D-47CV4-7	X1-WLB0707-4 (Type A1)	$\overline{4}$

© Diodes Incorporated

Marking Information (continued)

(2) X2-DFN1010-4 (Type B)

(Top View)

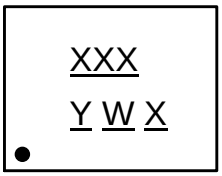

XXX : Identification Code
Y : Year : 0~9
W : Week : A~Z : 1~26 week;
a~z : 27~52 week; z represents 52 and 53 week
X : Internal Code

Part Number	Package	Identification Code
AP7353-18FS4-7	X2-DFN1010-4 (Type B)	B6A
AP7353-25FS4-7	X2-DFN1010-4 (Type B)	B6B
AP7353-28FS4-7	X2-DFN1010-4 (Type B)	B6C
AP7353-285FS4-7 (Note 12)	X2-DFN1010-4 (Type B)	B6D
AP7353-29FS4-7 (Note 12)	X2-DFN1010-4 (Type B)	B6E
AP7353-30FS4-7	X2-DFN1010-4 (Type B)	B6F
AP7353-31FS4-7 (Note 12)	X2-DFN1010-4 (Type B)	B6G
AP7353-32FS4-7 (Note 12)	X2-DFN1010-4 (Type B)	B6H
AP7353-33FS4-7	X2-DFN1010-4 (Type B)	B6J
AP7353-36FS4-7 (Note 12)	X2-DFN1010-4 (Type B)	B6K
AP7353-45FS4-7 (Note 12)	X2-DFN1010-4 (Type B)	B6L
AP7353D-18FS4-7	X2-DFN1010-4 (Type B)	B7A
AP7353D-25FS4-7	X2-DFN1010-4 (Type B)	B7B
AP7353D-28FS4-7	X2-DFN1010-4 (Type B)	B7C
AP7353D-285FS4-7 (Note 12)	X2-DFN1010-4 (Type B)	B7D
AP7353D-29FS4-7 (Note 12)	X2-DFN1010-4 (Type B)	B7E
AP7353D-30FS4-7	X2-DFN1010-4 (Type B)	B7F
AP7353D-31FS4-7 (Note 12)	X2-DFN1010-4 (Type B)	B7G
AP7353D-32FS4-7 (Note 12)	X2-DFN1010-4 (Type B)	B7H
AP7353D-33FS4-7	X2-DFN1010-4 (Type B)	B7J
AP7353D-36FS4-7 (Note 12)	X2-DFN1010-4 (Type B)	B7K
AP7353D-45FS4-7 (Note 12)	X2-DFN1010-4 (Type B)	B7L

Note: 12. This voltage is supported upon request.

© Diodes Incorporated

Package Outline Dimensions

Please see http://www.diodes.com/package-outlines.html for the latest version.

(1) X1-WLB0707-4 (Type A1)

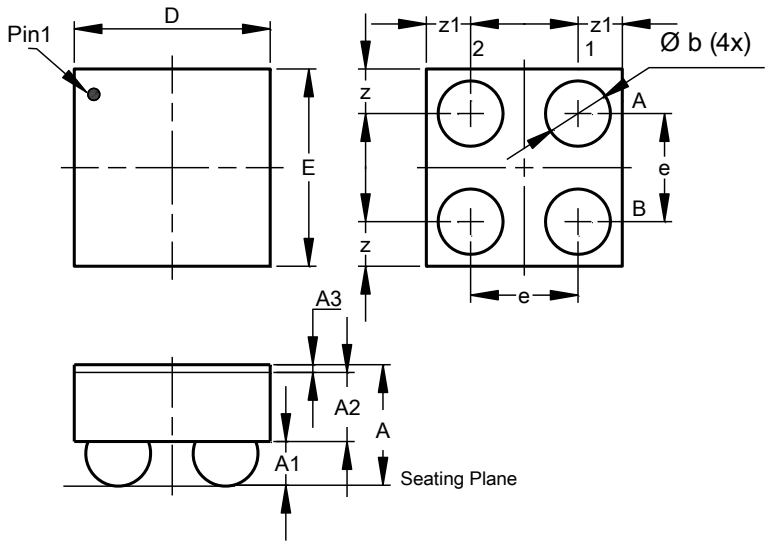

X1-WLB0707-4 (Type A1)			
Dim	**Min**	**Max**	**Typ**
A	0.345	0.445	0.395
A1	0.140	0.180	0.160
A2	0.185	0.235	0.210
A3	0.020	0.030	0.025
b	0.195	0.225	0.210
D	0.610	0.670	0.640
E	0.610	0.670	0.640
e	--	--	0.350
z	--	--	0.145
z1	--	--	0.145
All Dimensions in mm			

(2) X2-DFN1010-4 (Type B)

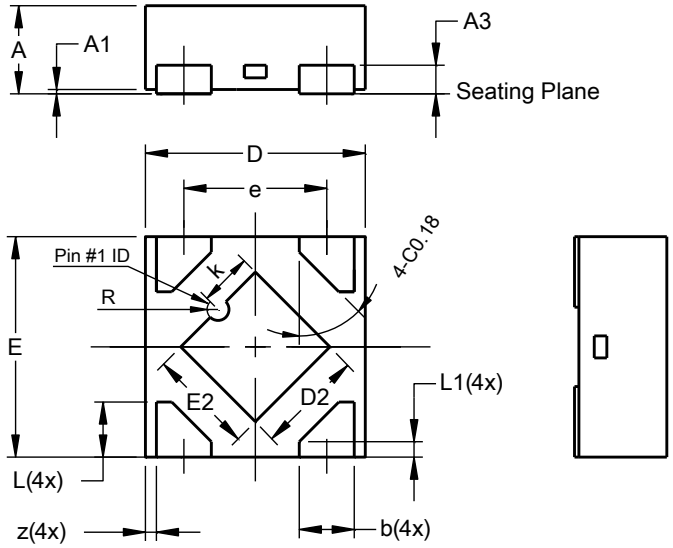

X2-DFN1010-4 (Type B)			
Dim	**Min**	**Max**	**Typ**
A	-	0.40	0.39
A1	0.00	0.05	0.02
A3	-	-	0.13
b	0.20	0.30	0.25
D	0.95	1.05	1.00
D2	0.43	0.53	0.48
E	0.95	1.05	1.00
E2	0.43	0.53	0.48
e	-	-	0.65
k	0.19	0.29	0.24
L	0.20	0.30	0.25
L1	0.02	0.12	0.07
R	0.02	0.08	0.05
z	-	-	0.050
All Dimensions in mm			

© Diodes Incorporated

Suggested Pad Layout

Please see http://www.diodes.com/package-outlines.html for the latest version.

(1) X1-WLB0707-4 (Type A1)

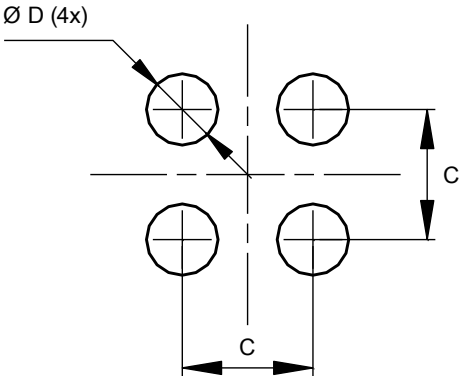

Dimensions	Value (in mm)
C	0.350
D	0.180

(2) X2-DFN1010-4 (Type B)

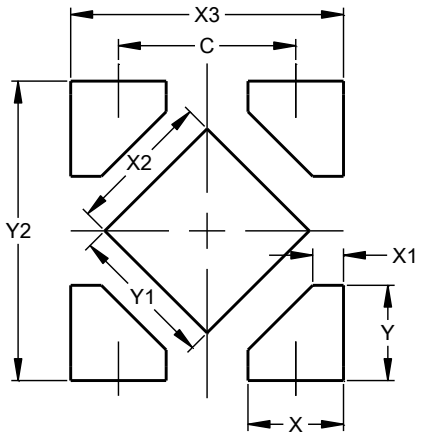

Dimensions	Value (in mm)
C	0.650
X	0.350
X1	0.112
X2	0.530
X3	1.00
Y	0.350
Y1	0.530
Y2	1.100

Mechanical Data

- Moisture Sensitivity: Level 1 per J-STD-020
- Terminals:
  - X1-WLB0707-4: Finish - tin-silver-copper (SnAgCu), Solderable per MIL-STD-202, Method 208 e1
  - X2-DFN1010-4 (Type B): Finish - NiPdAu over Copper Leads, Solderable per MIL-STD-202, Method 208 e4
- Weight:
  - X1-WLB0707-4: 0.001 grams (Approximate)
  - X2-DFN1010-4 (Type B): 0.001 grams (Approximate)

© Diodes Incorporated

IMPORTANT NOTICE

1. DIODES INCORPORATED (Diodes) AND ITS SUBSIDIARIES MAKE NO WARRANTY OF ANY KIND, EXPRESS OR IMPLIED, WITH REGARDS TO ANY INFORMATION CONTAINED IN THIS DOCUMENT, INCLUDING, BUT NOT LIMITED TO, THE IMPLIED WARRANTIES OF MERCHANTABILITY, FITNESS FOR A PARTICULAR PURPOSE OR NON-INFRINGEMENT OF THIRD PARTY INTELLECTUAL PROPERTY RIGHTS (AND THEIR EQUIVALENTS UNDER THE LAWS OF ANY JURISDICTION).

2. The Information contained herein is for informational purpose only and is provided only to illustrate the operation of Diodes' products described herein and application examples. Diodes does not assume any liability arising out of the application or use of this document or any product described herein. This document is intended for skilled and technically trained engineering customers and users who design with Diodes' products. Diodes' products may be used to facilitate safety-related applications; however, in all instances customers and users are responsible for (a) selecting the appropriate Diodes products for their applications, (b) evaluating the suitability of Diodes' products for their intended applications, (c) ensuring their applications, which incorporate Diodes' products, comply the applicable legal and regulatory requirements as well as safety and functional-safety related standards, and (d) ensuring they design with appropriate safeguards (including testing, validation, quality control techniques, redundancy, malfunction prevention, and appropriate treatment for aging degradation) to minimize the risks associated with their applications.

3. Diodes assumes no liability for any application-related information, support, assistance or feedback that may be provided by Diodes from time to time. Any customer or user of this document or products described herein will assume all risks and liabilities associated with such use, and will hold Diodes and all companies whose products are represented herein or on Diodes' websites, harmless against all damages and liabilities.

4. Products described herein may be covered by one or more United States, international or foreign patents and pending patent applications. Product names and markings noted herein may also be covered by one or more United States, international or foreign trademarks and trademark applications. Diodes does not convey any license under any of its intellectual property rights or the rights of any third parties (including third parties whose products and services may be described in this document or on Diodes' website) under this document.

5. Diodes' products are provided subject to Diodes' Standard Terms and Conditions of Sale (https://www.diodes.com/about/company/terms-and-conditions/terms-and-conditions-of-sales/) or other applicable terms. This document does not alter or expand the applicable warranties provided by Diodes. Diodes does not warrant or accept any liability whatsoever in respect of any products purchased through unauthorized sales channel.

6. Diodes' products and technology may not be used for or incorporated into any products or systems whose manufacture, use or sale is prohibited under any applicable laws and regulations. Should customers or users use Diodes' products in contravention of any applicable laws or regulations, or for any unintended or unauthorized application, customers and users will (a) be solely responsible for any damages, losses or penalties arising in connection therewith or as a result thereof, and (b) indemnify and hold Diodes and its representatives and agents harmless against any and all claims, damages, expenses, and attorney fees arising out of, directly or indirectly, any claim relating to any noncompliance with the applicable laws and regulations, as well as any unintended or unauthorized application.

7. While efforts have been made to ensure the information contained in this document is accurate, complete and current, it may contain technical inaccuracies, omissions and typographical errors. Diodes does not warrant that information contained in this document is error-free and Diodes is under no obligation to update or otherwise correct this information. Notwithstanding the foregoing, Diodes reserves the right to make modifications, enhancements, improvements, corrections or other changes without further notice to this document and any product described herein. This document is written in English but may be translated into multiple languages for reference. Only the English version of this document is the final and determinative format released by Diodes.

8. Any unauthorized copying, modification, distribution, transmission, display or other use of this document (or any portion hereof) is prohibited. Diodes assumes no responsibility for any losses incurred by the customers or users or any third parties arising from any such unauthorized use.

9. This Notice may be periodically updated with the most recent version available at https://www.diodes.com/about/company/terms-and-conditions/important-notice

DIODES is a trademark of Diodes Incorporated in the United States and other countries.
The Diodes logo is a registered trademark of Diodes Incorporated in the United States and other countries.
© 2022 Diodes Incorporated. All Rights Reserved.

www.diodes.com

ENTEGRECİ

Bu belge www.entegreci.com üzerinden sunulmaktadır.

Elektronik komponent tedarikinde Entegreci

Entegreci, Eskişehir merkezli, Türkiye geneline satış yapan bir elektronik komponent mağazasıdır. Entegreler (IC), mikrodenetleyiciler, transistörler, diyotlar, pasif elemanlar, konnektörler, modüller ve geliştirme kartları tek adetten seri üretim adetlerine kadar satılır. Ürün sayfalarında güncel stok durumunu, fiyatı ve datasheet bağlantısını bulabilirsiniz.

Parça koduyla arama

Üretici parça numarasını yazın; stok ve fiyatı hemen görün.

www.entegreci.com

Ürün kategorileri

Entegreden kapasitöre tüm elektronik komponent kategorileri.

Kategorilere göz atın

Üreticiler

Aradığınız üreticinin ürünlerini tek sayfada inceleyin.

Üreticileri görün

Toplu alım ve teklif

Listede olmayan ya da yüksek adetli parçalar için teklif isteyin.

Teklif isteyin

www.entegreci.com | **destek@entegreci.com** | **0850 305 90 34**

Entegreci is an online electronic components store based in Türkiye. Search by manufacturer part number to see stock, prices and datasheets for integrated circuits, microcontrollers, transistors, passive components and connectors, or request a quote for parts that are not listed.

Bu sayfa Entegreci tarafından eklenmiştir. Belgenin önceki sayfaları asıl yayıncısına aittir ve içeriği değiştirilmemiştir; en güncel sürüm için belgenin yayıncısına başvurun.