150mA ULTRA-LOW QUIESCENT CURRENT LDO WITH ENABLE

Description

The AP7354 is a low dropout regulator with high output voltage accuracy. The AP7354 includes a voltage reference, error amplifier, current limit circuit, and an enable input to turn it on/off. With the integrated resistor network, fixed output voltage versions can be delivered.

With its ultra-low quiescent current, the AP7354 is well-suited for low-power handheld, wearable devices, and other battery-operated devices requiring an extended time period until new battery replacement.

The AP7354 is available in SOT23, SOT25, and X2-DFN1010-4 (Type B) packages.

Features

- Wide V_{IN} Range: 2.0V to 5.5V
- Guarantee Output Current: 150mA
- Output Voltage Range: 1.1V to 4.5V
- V_{OUT} Accuracy: ±1%
- Quiescent Current as Low as 0.25µA
- Output Discharge Available for Devices in SOT25 or X2-DFN1010-4 (Type B)
- Typical Standby Current: 0.02µA
- ESD Protection Exceeds JESD 22
  - Exceeds 4000V Human Body Model (A114)
  - Exceeds 400V Machine Model (A115)
- Latch-Up Exceeds 400mA per JESD 78, Class I
- Moisture Sensitivity: Level 1 per J-STD-020
- Terminals:
  - SOT23/SOT25: Finish - Mate Tin Plated Leads, Solderable per MIL-STD-202, Method 208 e3
  - X2-DFN1010-4 (Type B): Finish - NiPdAu over Copper Leads, Solderable per MIL-STD-202, Method 208 e4
- Weight:
  - SOT23: 0.009 grams (Approximate)
  - SOT25: 0.016 grams (Approximate)
  - X2-DFN1010-4 (Type B): 0.001 grams (Approximate)
- **Totally Lead-Free & Fully RoHS Compliant (Notes 1 & 2)**
- **Halogen and Antimony Free. "Green" Device (Note 3)**
- **For automotive applications requiring specific change control (i.e. parts qualified to AEC-Q100/101/200, PPAP capable, and manufactured in IATF 16949 certified facilities), please contact us or your local Diodes representative. https://www.diodes.com/quality/product-definitions/**

Pin Assignments

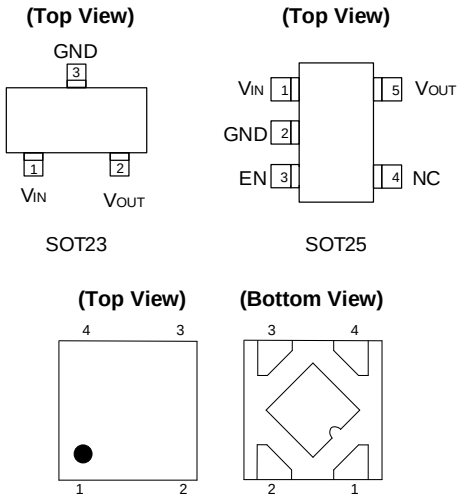

Pin 1 – V_{OUT}, Pin 2 – GND, Pin 3 – EN, Pin 4 – V_{IN}

Applications

- Wearable Electronics
- Sensor Module for Internet-of-Things (IoT)
- Wireless Communication Module
- Battery-Operated Device
- Camera
- Image Sensor

Typical Applications Circuit (Note 4)

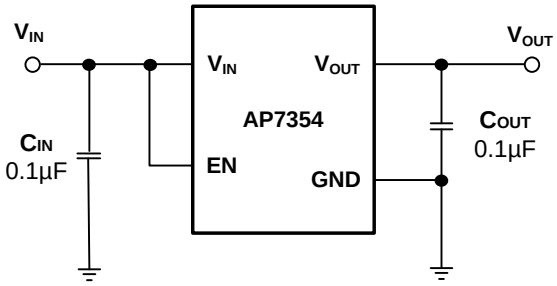

Notes:
1. No purposely added lead. Fully EU Directive 2002/95/EC (RoHS), 2011/65/EU (RoHS 2) & 2015/863/EU (RoHS 3) compliant.
2. See https://www.diodes.com/quality/lead-free/ for more information about Diodes Incorporated's definitions of Halogen- and Antimony-free, "Green" and Lead-free.
3. Halogen- and Antimony-free "Green" products are defined as those which contain <900ppm bromine, <900ppm chlorine (<1500ppm total Br + Cl) and <1000ppm antimony compounds.
4. X5R- and X7R-type capacitors are suggested due to their minimal variation in value and ESR over temperature.

© Diodes Incorporated

Pin Description

Pin Number			Pin Name	Function
SOT25	SOT23	X2-DFN1010-4 (Type B)		
3	—	3	EN	Chip Enable — This should be driven either high or low and must not be floating. Driving EN high enables regulator output, while pulling it low places regulator into shutdown mode.
2	3	2	GND	Ground
5	2	1	V_{OUT}	Output Voltage
1	1	4	V_{IN}	Power Input
—	—	Center Pad	—	No connection or ground. Note: Chip Ground must be through GND pin.

Functional Block Diagram

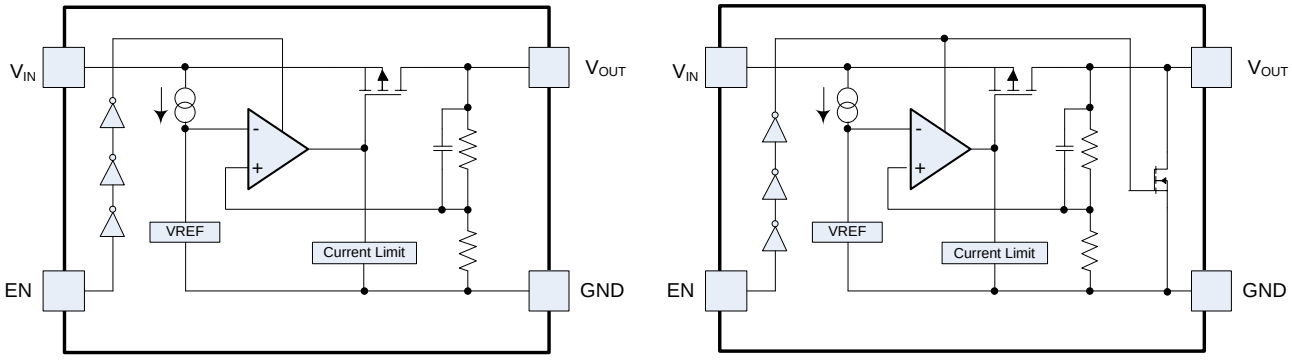

AP7354 (Without Discharge)

AP7354D (With Discharge)

EN Pin Not Available on SOT23

© Diodes Incorporated

Absolute Maximum Ratings (Note 5)

Symbol	Parameter	Rating	Unit
ESD HBM	Human Body Model ESD Protection	4	kV
ESD MM	Machine Model ESD Protection	400	V
V_{IN}	Input Voltage	6.0	V
V_{EN}	Input Voltage at EN Pin	6.0	V
V_{OUT}	Output Voltage to GND	-0.3 to V_{IN} +0.3	V
T_A	Operating Ambient Temperature	-40 to +85	°C
T_J	Maximum Junction Temperature	+125	°C
T_{STG}	Storage Temperature	-55 to +125	°C
P_D	Power Dissipation (Note 6)	315	mW

Notes: 5. Stresses beyond those listed under *Absolute Maximum Ratings* can cause permanent damage to the device. These are stress ratings only and functional operation of the device at these conditions is not implied. Exposure to absolute-maximum-rated conditions for extended periods can affect device reliability.
6. This is based on an application temperature of +40°C. Derate 3.75mW per °C for each degree above +40°C.

Recommended Operating Conditions

Symbol	Parameter	Min	Max	Unit
V_{IN}	Input Voltage	2.0	5.5	V
I_{OUT}	Output Current	0	150	mA
T_A	Operating Ambient Temperature	-40	+85	°C

© Diodes Incorporated

Electrical Characteristics (@T_A = +25°C, V_{EN} = V_{IN} = V_{OUT}+1V (1.5V < V_{OUT} ≤ 4.5V), V_{EN} = V_{IN} = 2.5V (V_{OUT} ≤ 1.5V), I_{OUT} = 1mA, C_{IN} = C_{OUT} = 0.1µF, unless otherwise specified.)

Parameter	Conditions		Min	Typ	Max	Unit
Input Voltage	T_A = -40°C to +85°C		2.0	—	5.5	V
Output Voltage Accuracy	V_{OUT} > 2.0V I_{OUT} = 1mA	T_A = +25°C	-1	—	+1	%
		T_A = -40°C to +85°C	-2	—	+2	
	V_{OUT} ≤ 2.0V I_{OUT} = 1mA	T_A = +25°C	-40	—	40	mV
		T_A = -40°C to +85°C	-80	—	80	
Line Regulation ($\Delta V_{OUT}/\Delta V_{IN}/V_{OUT}$)	MAX (V_{OUT} + 1.0V, 2.5V) ≤ V_{IN} ≤ 5.5V (All Versions Except 4.5V)		—	0.02	0.1	%/V
Load Regulation (ΔV_{OUT})	1mA ≤ I_{OUT} ≤ 150mA (All Versions Except 4.5V)		-40	—	40	mV
	1mA ≤ I_{OUT} ≤ 150mA (Applicable to 4.5V Version)		-55	—	55	mV
Short Circuit Current Limit (Note 7)	V_{OUT} = 0V		—	60	—	mA
Quiescent Current (Note 8)	I_{OUT} = 0mA		—	0.25	0.6	µA
$I_{STANDBY}$	Set EN Low, No Load		—	0.02	0.2	µA
Output Current	—		150	—	—	mA
Dropout Voltage (Note 9)	I_{OUT} = 150mA	V_{OUT} = 1.1V	—	0.70	1.00	V
		V_{OUT} = 1.2V	—	0.60	0.90	
		V_{OUT} = 1.5V	—	0.43	0.75	
		V_{OUT} = 1.8V	—	0.33	0.60	
		V_{OUT} = 1.85V	—	0.32	0.58	
		V_{OUT} = 2.2V	—	0.27	0.52	
		V_{OUT} = 2.5V	—	0.22	0.48	
		V_{OUT} = 2.8V	—	0.19	0.40	
		V_{OUT} = 3.0V	—	0.18	0.35	
		V_{OUT} = 3.3V	—	0.16	0.35	
		V_{OUT} = 4.5V	—	0.14	0.35	
EN Input Low Voltage	—		—	—	0.4	V
EN Input High Voltage	—		1.0	—	5.5	V
Active Output Discharge Resistance (Note 10)	V_{IN} = 4.0V, V_{EN} = 0V		—	35	—	Ω
Θ_{JA} Thermal Resistance Junction-to-Ambient	(Note 11)	SOT23	—	170	—	°C/W
		SOT25	—	162	—	
		X2-DFN1010-4 (Type B)	—	295	—	
Θ_{JC} Thermal Resistance Junction-to-Case	(Note 11)	SOT23	—	43	—	°C/W
		SOT25	—	38	—	
		X2-DFN1010-4 (Type B)	—	120	—	

Notes:
7. Short-circuit current is measured with V_{OUT} pulled to GND.
8. Quiescent current defined as the difference in current between the input and the output.
9. Dropout voltage is the voltage difference between the input and the output at which the output voltage drops 2% below its nominal value.
10. AP7354 is available with two options: built-in discharge (AP7354D) and non-discharge (AP7354).
11. Test condition: Device mounted on 1" × 1" FR-4 MRP substrate PCB, 2oz copper, with minimum recommended pad layout.

© Diodes Incorporated

Performance Characteristics

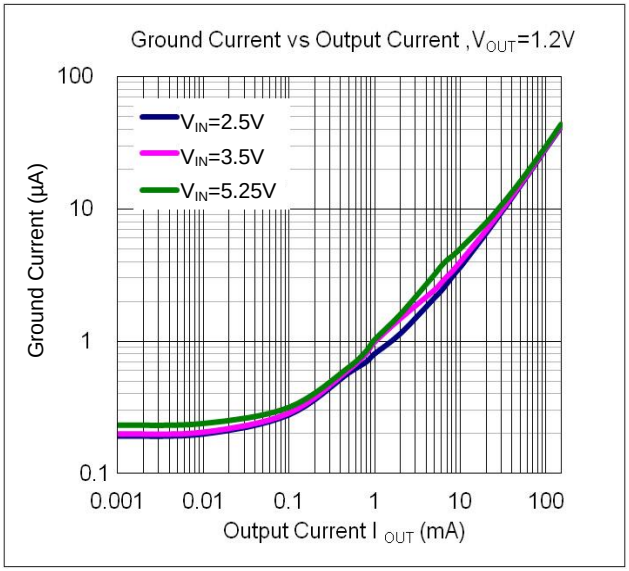

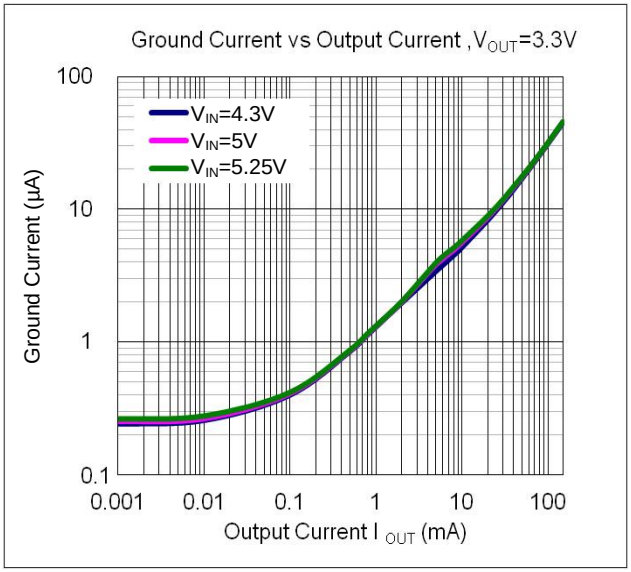

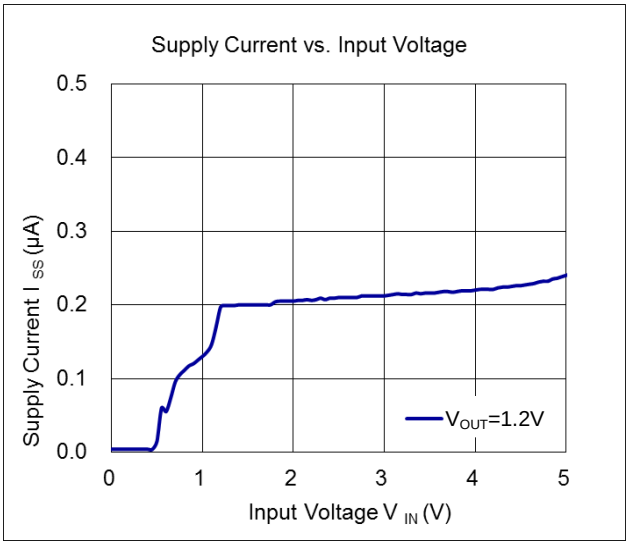

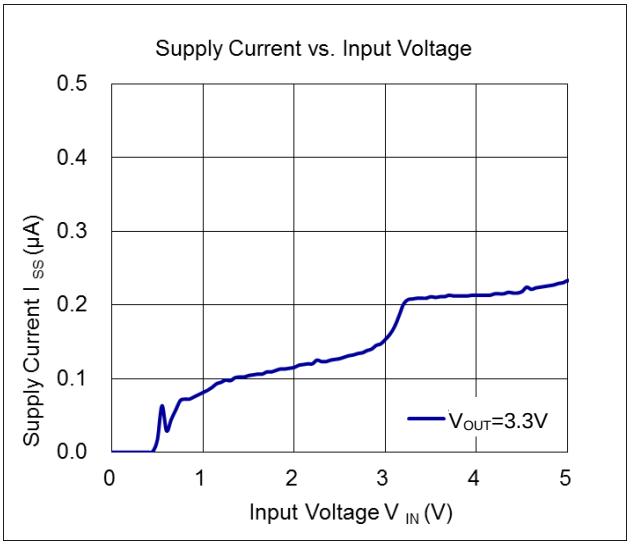

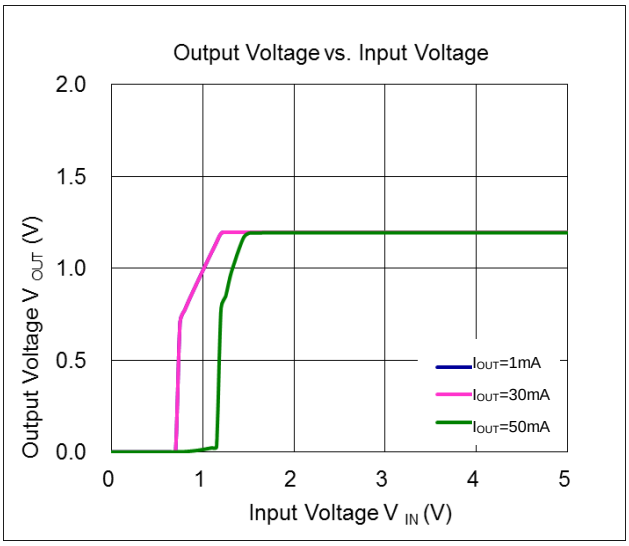

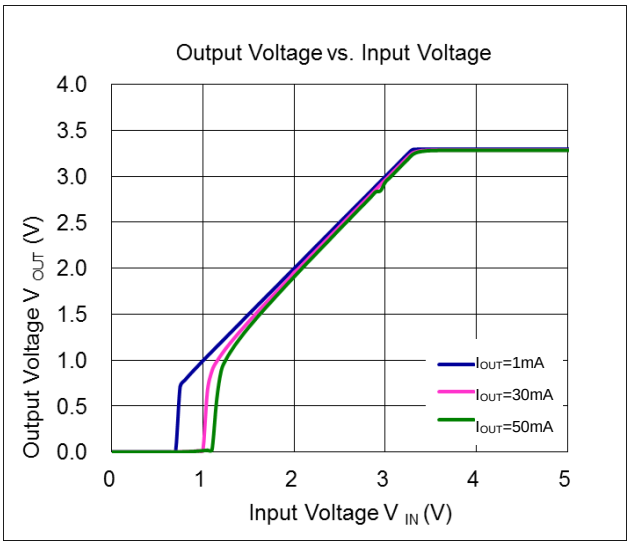

© Diodes Incorporated

Performance Characteristics (continued)

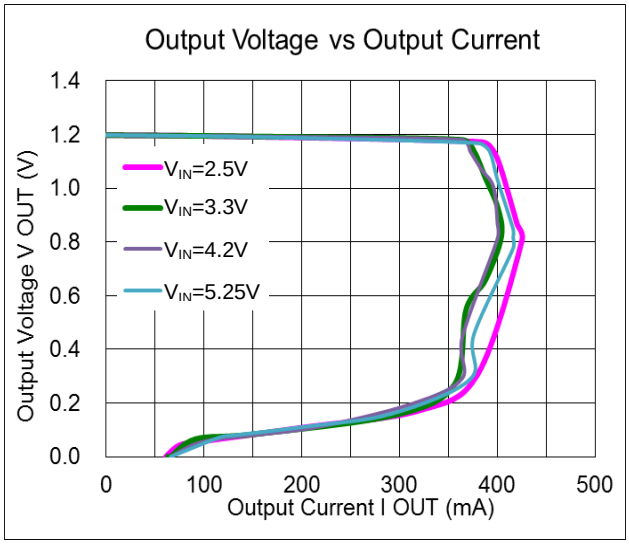

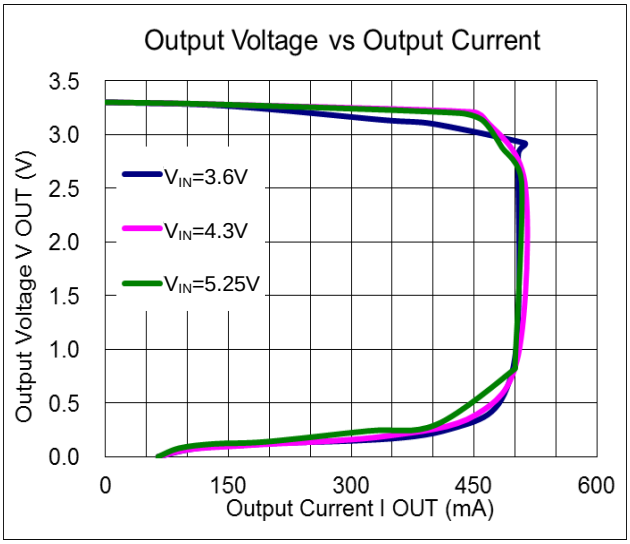

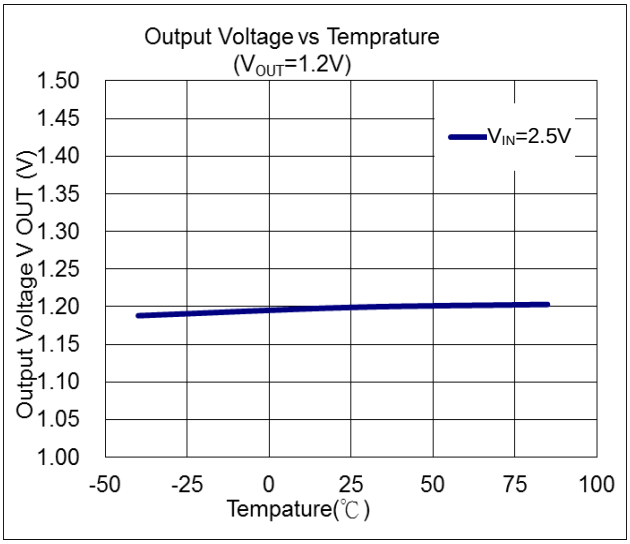

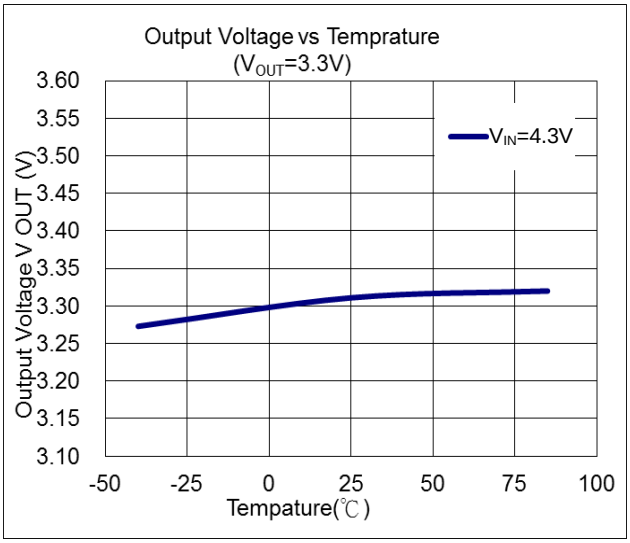

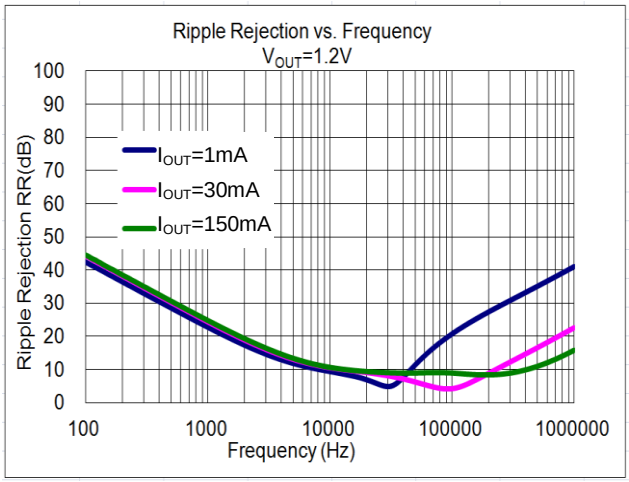

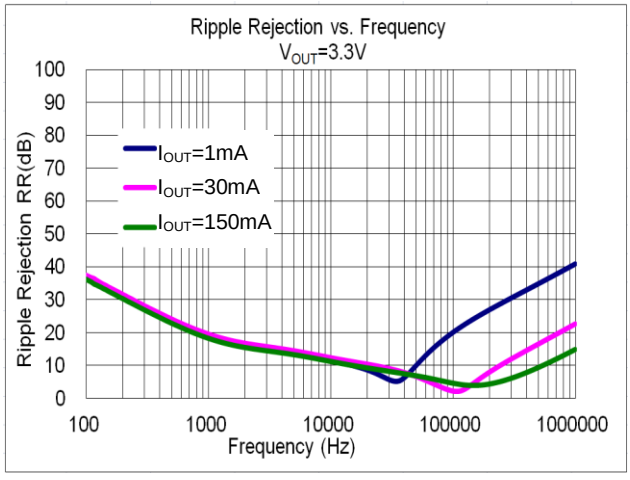

© Diodes Incorporated

Performance Characteristics (continued)

Load Transient Response (C_{IN} = C_{OUT} = 0.1µF, t_R = t_F = 5.0µs, unless otherwise specified.)

V_{IN} = 3.3V, V_{OUT} = 1.2V, I_{OUT} = 1mA to 50mA

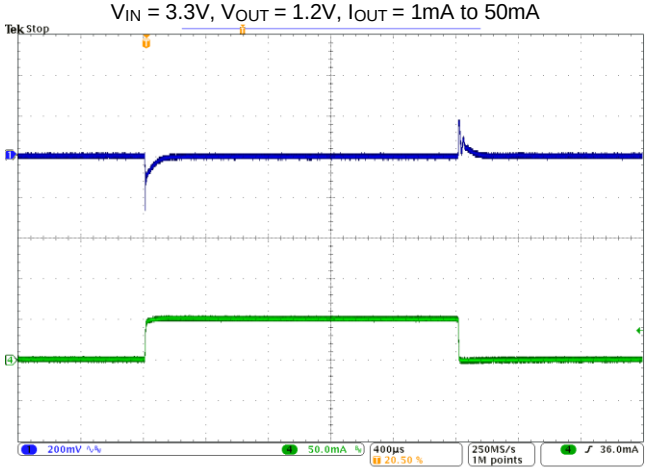

V_{IN} = 3.3V, V_{OUT} = 1.2V, I_{OUT} = 50mA to 100mA

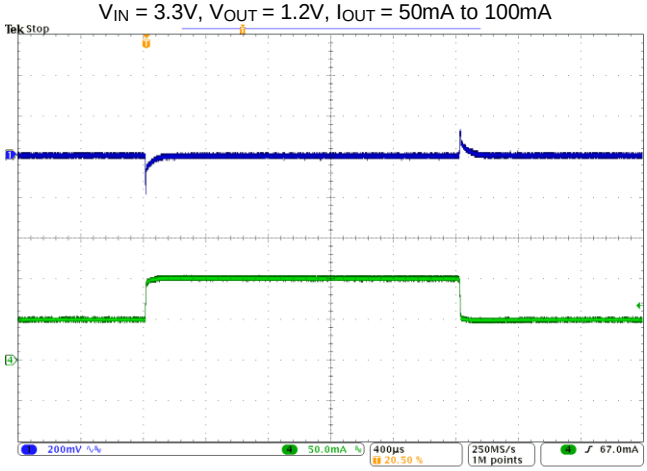

V_{IN} = 4.3V, V_{OUT} = 3.3V, I_{OUT} = 1mA to 50mA

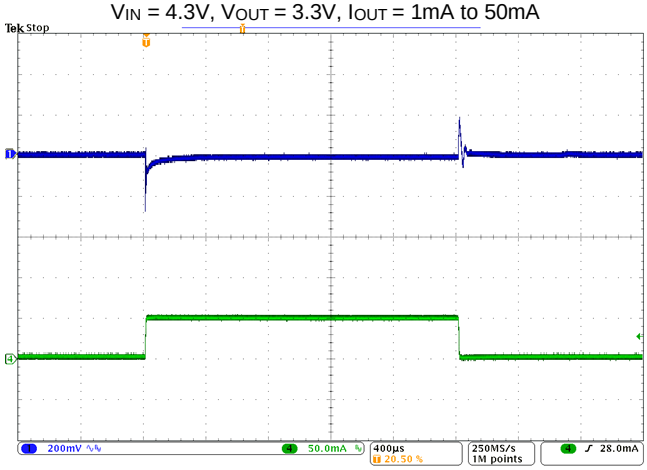

V_{IN} = 4.3V, V_{OUT} = 3.3V, I_{OUT} = 50mA to 100mA

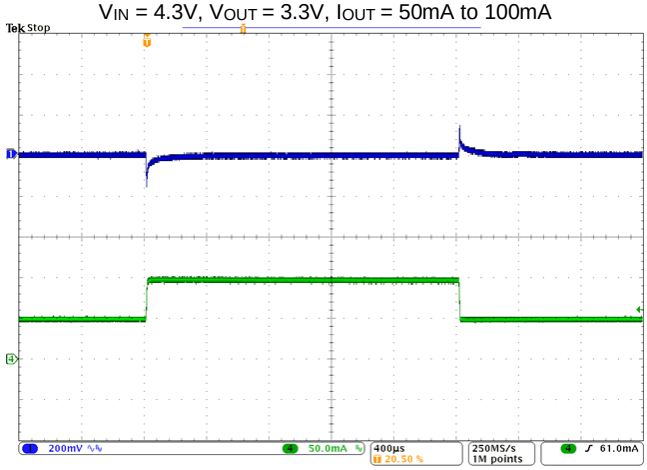

© Diodes Incorporated

Performance Characteristics (continued)

TURN ON

V_{IN} = 3.3V, V_{OUT} = 1.2V, I_{OUT} = 0mA, C_{IN} = C_{OUT} = 0.1µF

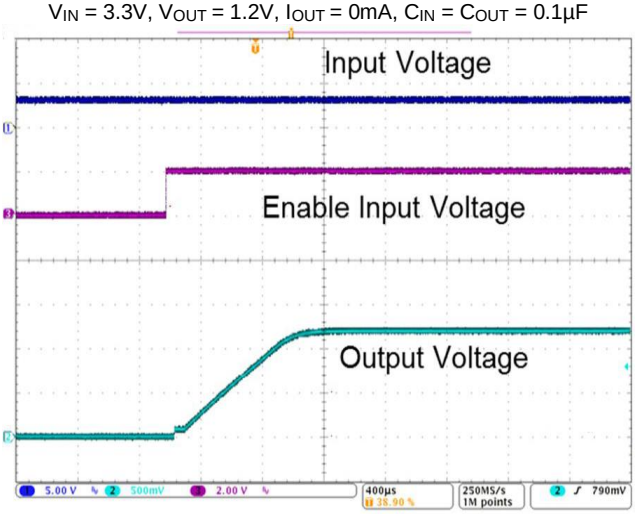

V_{IN} = 3.3V, V_{OUT} = 1.2V, I_{OUT} = 150mA, C_{IN} = C_{OUT} = 0.1µF

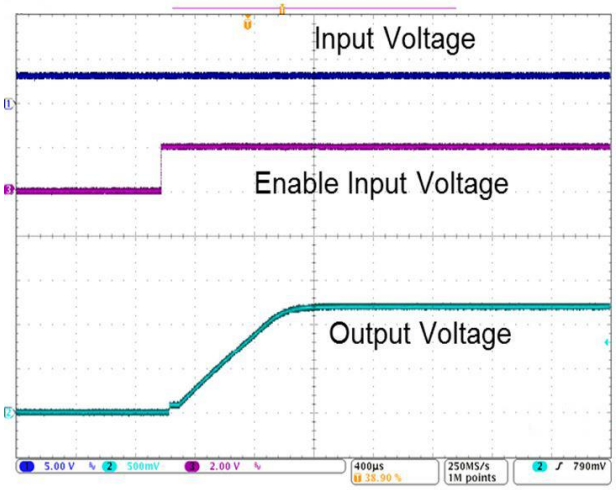

V_{IN} = 4.3V, V_{OUT} = 3.3V, I_{OUT} = 0mA, C_{IN} = C_{OUT} = 0.1µF

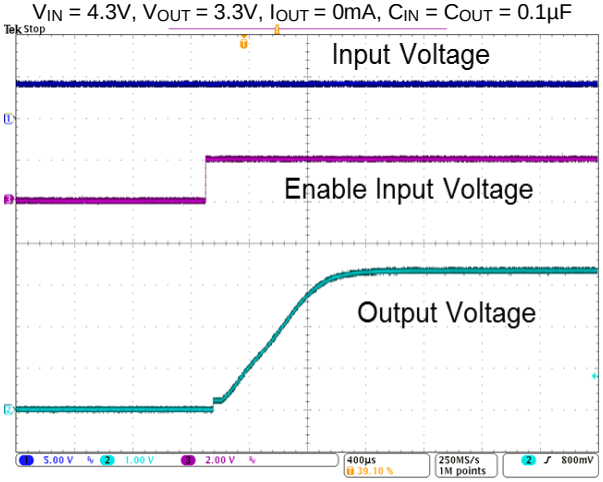

TURN OFF

V_{IN} = 3.3V, V_{OUT} = 1.2V, I_{OUT} = 0mA, C_{IN} = C_{OUT} = 0.1µF

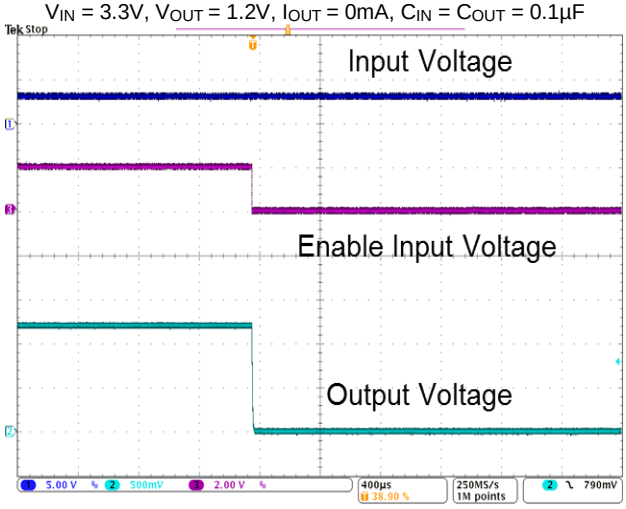

V_{IN} = 3.3V, V_{OUT} = 1.2V, I_{OUT} = 150mA, C_{IN} = C_{OUT} = 0.1µF

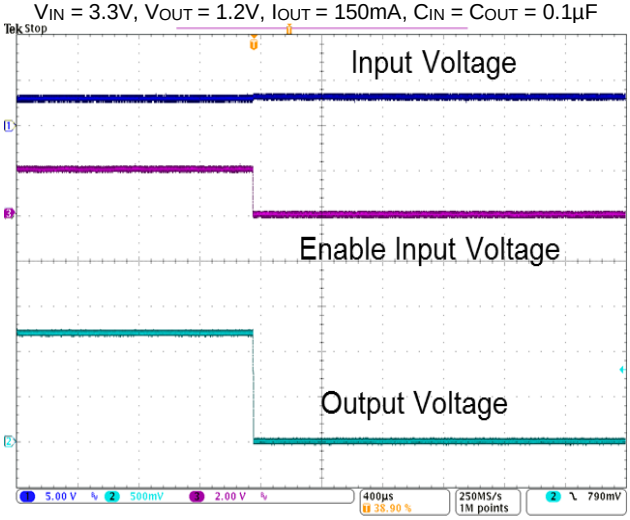

V_{IN} = 4.3V, V_{OUT} = 3.3V, I_{OUT} = 0mA, C_{IN} = C_{OUT} = 0.1µF

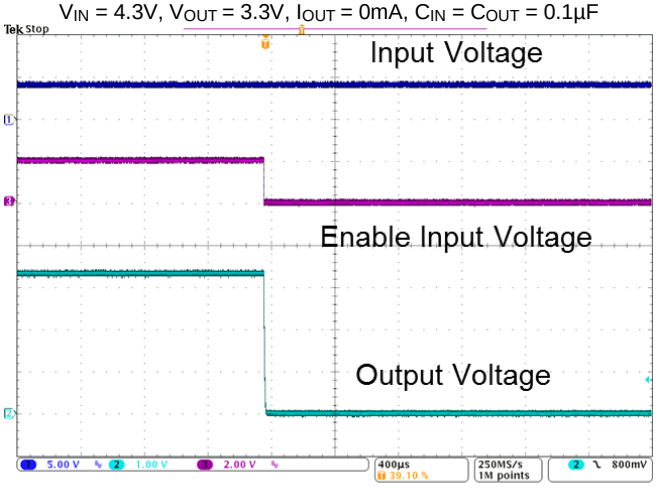

© Diodes Incorporated

Performance Characteristics (continued)

TURN ON

V_{IN} = 4.3V, V_{OUT} = 3.3V, I_{OUT} = 150mA, C_{IN} = C_{OUT} = 0.1µF

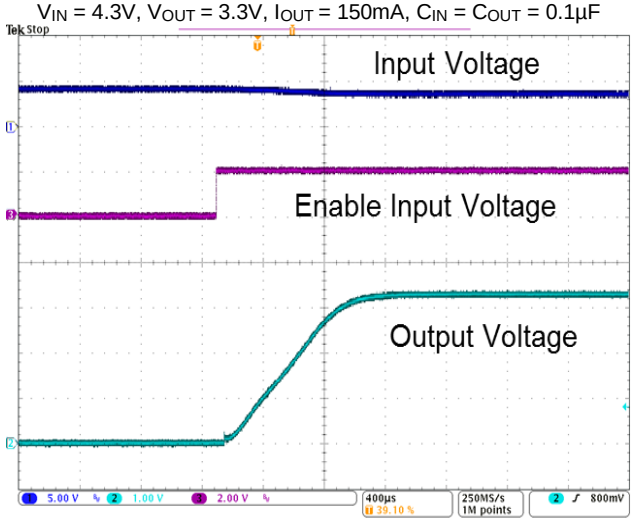

TURN OFF

V_{IN} = 4.3V, V_{OUT} = 3.3V, I_{OUT} = 150mA, C_{IN} = C_{OUT} = 0.1µF

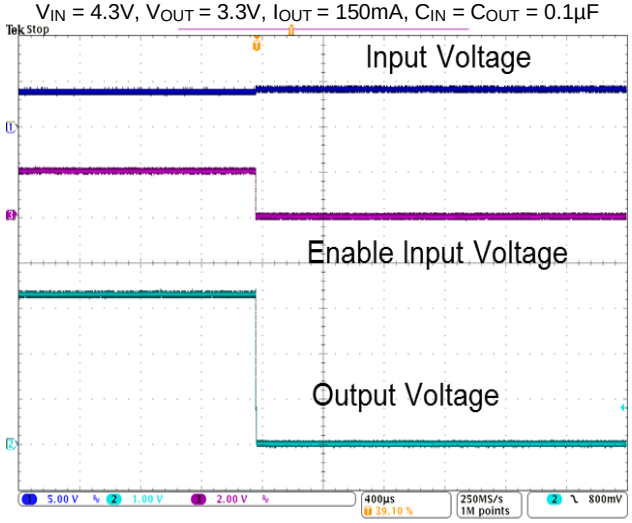

© Diodes Incorporated

Application Information

Output Capacitor

An output capacitor (C_{OUT}) is required to improve transient response and maintain stability. The AP7354 is stable with very small ceramic output capacitors. The equivalent series resistance (ESR) and capacitance drive the selection. If the application has large load variations, it is recommended to utilize low-ESR bulk capacitors. It is recommended to place ceramic capacitors as close as possible to the load and the GND pin. Care must be taken to reduce the impedance in the layout.

Input Capacitor

To prevent the input voltage from dropping during load steps, it is recommended to utilize an input capacitor (C_{IN}). A minimum 0.1μF ceramic capacitor is recommended between V_{IN} and GND pin to decouple input power supply glitch. This input capacitor must be located as close as possible to the device to assure input stability and reduce noise. For PCB layout, a wide copper trace is required for both V_{IN} and GND pin.

Enable Control

The AP7354 is turned on by setting the EN pin high, and is turned off by pulling them low. If this feature is not used, the EN pin should be tied to V_{IN} pin to keep the regulator output on at all time. To ensure proper operation, the signal source used to drive the EN pin must be able to swing above and below the specified turn-on/off voltage thresholds listed in the *Electrical Characteristics* section.

Layout Considerations

For good ground loop and stability, the input and output capacitors must be located close to the input, output, and GND pin of the device. The regulator GND pin must be connected to the external circuit ground to reduce voltage drop caused by trace impedance. Ground plane is generally used to reduce trace impedance. Wide trace must be used for large current paths from V_{IN} to V_{OUT} and load circuit.

ESR vs. Output Current

A ceramic type output capacitor is recommended for this series; however, the other output capacitors with low ESR also can be used. The relations between I_{OUT} (output current) and ESR of an output capacitor are shown below. The stable region is marked as the hatched area in the graph.

Measurement Conditions:

- Frequency Band: 10Hz to 2MHz
- Temperature: -40°C to +85°C

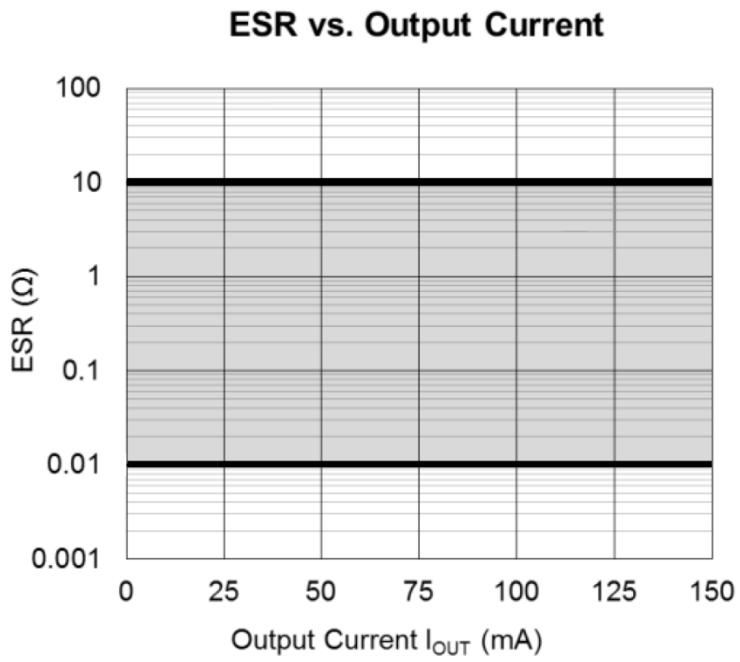

© Diodes Incorporated

Ordering Information (Note 12)

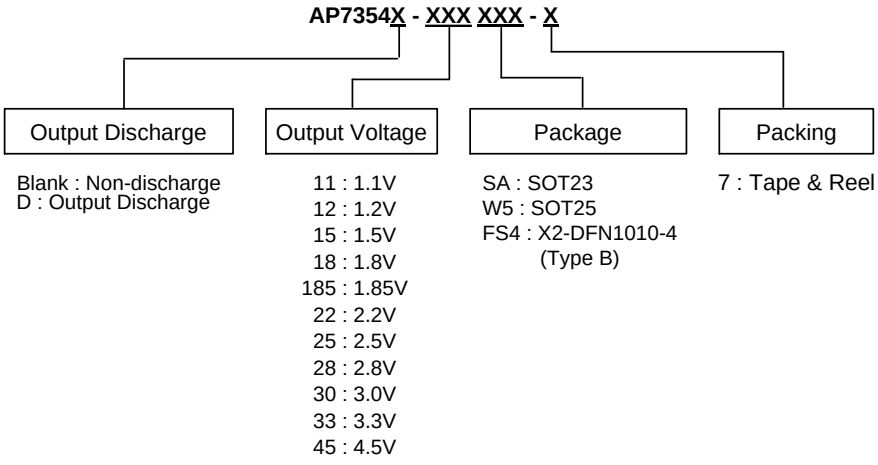

Output Voltage	SOT23	SOT25 Without Discharge	SOT25 With Discharge	7" Tape and Reel	
				Quantity	Part Number Suffix
1.2	AP7354-12SA-7	AP7354-12W5-7	AP7354D-12W5-7	3000/Tape & Reel	-7
1.5	AP7354-15SA-7	AP7354-15W5-7	AP7354D-15W5-7	3000/Tape & Reel	-7
1.8	AP7354-18SA-7	AP7354-18W5-7	AP7354D-18W5-7	3000/Tape & Reel	-7
1.85	AP7354-185SA-7	AP7354-185W5-7	AP7354D-185W5-7	3000/Tape & Reel	-7
2.2	AP7354-22SA-7	—	—	3000/Tape & Reel	-7
2.5	AP7354-25SA-7	AP7354-25W5-7	AP7354D-25W5-7	3000/Tape & Reel	-7
2.8	AP7354-28SA-7	AP7354-28W5-7	AP7354D-28W5-7	3000/Tape & Reel	-7
3.0	AP7354-30SA-7	AP7354-30W5-7	AP7354D-30W5-7	3000/Tape & Reel	-7
3.3	AP7354-33SA-7	AP7354-33W5-7	AP7354D-33W5-7	3000/Tape & Reel	-7
4.5	AP7354-45SA-7	AP7354-45W5-7	AP7354D-45W5-7	3000/Tape & Reel	-7

Output Voltage	X2-DFN1010-4 (Type B) Without Discharge	X2-DFN1010-4 (Type B) With Discharge	7" Tape and Reel	
			Quantity	Part Number Suffix
1.1	AP7354-11FS4-7	AP7354D-11FS4-7	5000/Tape & Reel	-7
1.2	AP7354-12FS4-7	AP7354D-12FS4-7	5000/Tape & Reel	-7
1.5	AP7354-15FS4-7	AP7354D-15FS4-7	5000/Tape & Reel	-7
1.8	AP7354-18FS4-7	AP7354D-18FS4-7	5000/Tape & Reel	-7
1.85	AP7354-185FS4-7	AP7354D-185FS4-7	5000/Tape & Reel	-7
2.5	AP7354-25FS4-7	AP7354D-25FS4-7	5000/Tape & Reel	-7
2.8	AP7354-28FS4-7	AP7354D-28FS4-7	5000/Tape & Reel	-7
3.0	AP7354-30FS4-7	AP7354D-30FS4-7	5000/Tape & Reel	-7
3.3	AP7354-33FS4-7	AP7354D-33FS4-7	5000/Tape & Reel	-7
4.5	AP7354-45FS4-7	AP7354D-45FS4-7	5000/Tape & Reel	-7

Note: 12. For packaging details, go to our website at https://www.diodes.com/design/support/packaging/diodes-packaging/.

© Diodes Incorporated

Marking Information

(1) SOT23

(Top View)

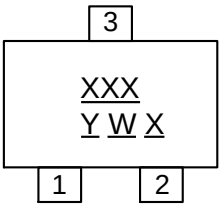

XXX : Identification Code
Y : Year 0 to 9
W : Week : A to Z : 1 to 26 week;
a to z : 27 to 52 week; z represents
52 and 53 week
X : Internal Code

Part Number	Package	Identification Code
AP7354-12SA-7	SOT23	A8A
AP7354-15SA-7	SOT23	A8B
AP7354-18SA-7	SOT23	A8C
AP7354-185SA-7	SOT23	A8D
AP7354-22SA-7	SOT23	A8K
AP7354-25SA-7	SOT23	A8E
AP7354-28SA-7	SOT23	A8F
AP7354-30SA-7	SOT23	A8G
AP7354-33SA-7	SOT23	A8H
AP7354-45SA-7	SOT23	A8J

© Diodes Incorporated

Marking Information (continued)

(2) SOT25

(Top View)

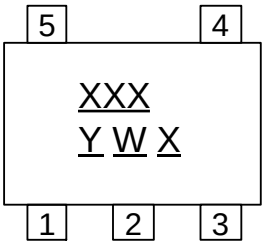

XXX : Identification Code
Y : Year 0 to 9
W : Week : A to Z : 1 to 26 week;
a to z : 27 to 52 week; z represents 52 and 53 week
X : Internal Code

Part Number	Package	Identification Code
AP7354-12W5-7	SOT25	A8A
AP7354-15W5-7	SOT25	A8B
AP7354-18W5-7	SOT25	A8C
AP7354-185W5-7	SOT25	A8D
AP7354-25W5-7	SOT25	A8E
AP7354-28W5-7	SOT25	A8F
AP7354-30W5-7	SOT25	A8G
AP7354-33W5-7	SOT25	A8H
AP7354-45W5-7	SOT25	A8J
AP7354D-12W5-7	SOT25	A9A
AP7354D-15W5-7	SOT25	A9B
AP7354D-18W5-7	SOT25	A9C
AP7354D-185W5-7	SOT25	A9D
AP7354D-25W5-7	SOT25	A9E
AP7354D-28W5-7	SOT25	A9F
AP7354D-30W5-7	SOT25	A9G
AP7354D-33W5-7	SOT25	A9H
AP7354D-45W5-7	SOT25	A9J

© Diodes Incorporated

Marking Information (continued)

(3) X2-DFN1010-4 (Type B)

(Top View)

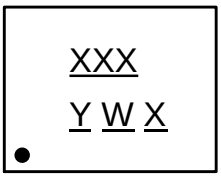

XXX : Identification Code
Y : Year : 0~9
W : Week : A~Z : 1~26 week;
a~z : 27~52 week; z represents 52 and 53 week
X : Internal Code

Part Number	V_{OUT}	Package	Identification Code
AP7354-11FS4-7	1.1V	X2-DFN1010-4 (Type B)	A8M
AP7354-12FS4-7	1.2V	X2-DFN1010-4 (Type B)	A8A
AP7354-15FS4-7	1.5V	X2-DFN1010-4 (Type B)	A8B
AP7354-18FS4-7	1.8V	X2-DFN1010-4 (Type B)	A8C
AP7354-185FS4-7	1.85V	X2-DFN1010-4 (Type B)	A8D
AP7354-25FS4-7	2.5V	X2-DFN1010-4 (Type B)	A8E
AP7354-28FS4-7	2.8V	X2-DFN1010-4 (Type B)	A8F
AP7354-30FS4-7	3.0V	X2-DFN1010-4 (Type B)	A8G
AP7354-33FS4-7	3.3V	X2-DFN1010-4 (Type B)	A8H
AP7354-45FS4-7	4.5V	X2-DFN1010-4 (Type B)	A8J
AP7354D-11FS4-7	1.1V	X2-DFN1010-4 (Type B)	A9M
AP7354D-12FS4-7	1.2V	X2-DFN1010-4 (Type B)	A9A
AP7354D-15FS4-7	1.5V	X2-DFN1010-4 (Type B)	A9B
AP7354D-18FS4-7	1.8V	X2-DFN1010-4 (Type B)	A9C
AP7354D-185FS4-7	1.85V	X2-DFN1010-4 (Type B)	A9D
AP7354D-25FS4-7	2.5V	X2-DFN1010-4 (Type B)	A9E
AP7354D-28FS4-7	2.8V	X2-DFN1010-4 (Type B)	A9F
AP7354D-30FS4-7	3.0V	X2-DFN1010-4 (Type B)	A9G
AP7354D-33FS4-7	3.3V	X2-DFN1010-4 (Type B)	A9H
AP7354D-45FS4-7	4.5V	X2-DFN1010-4 (Type B)	A9J

© Diodes Incorporated

Package Outline Dimensions

Please see http://www.diodes.com/package-outlines.html for the latest version.

(1) Package Type: SOT23

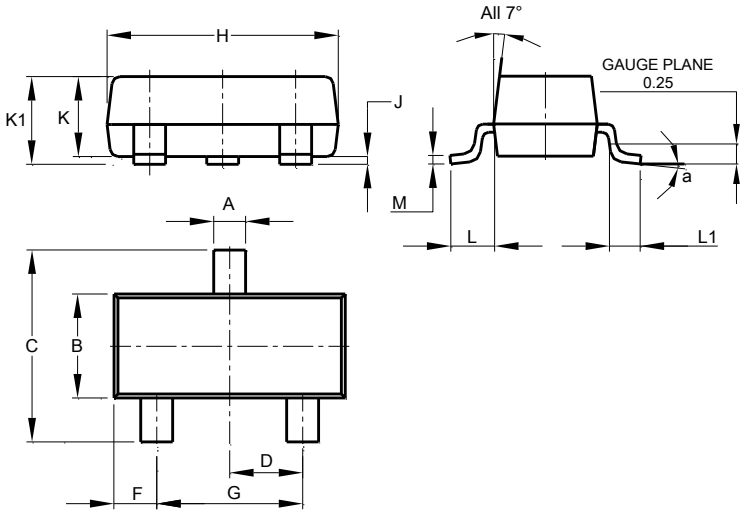

SOT23			
Dim	**Min**	**Max**	**Typ**
A	0.37	0.51	0.40
B	1.20	1.40	1.30
C	2.30	2.50	2.40
D	0.89	1.03	0.915
F	0.45	0.60	0.535
G	1.78	2.05	1.83
H	2.80	3.00	2.90
J	0.013	0.10	0.05
K	0.890	1.00	0.975
K1	0.903	1.10	1.025
L	0.45	0.61	0.55
L1	0.25	0.55	0.40
M	0.085	0.150	0.110
a	0°	8°	--
All Dimensions in mm			

(2) Package Type: SOT25

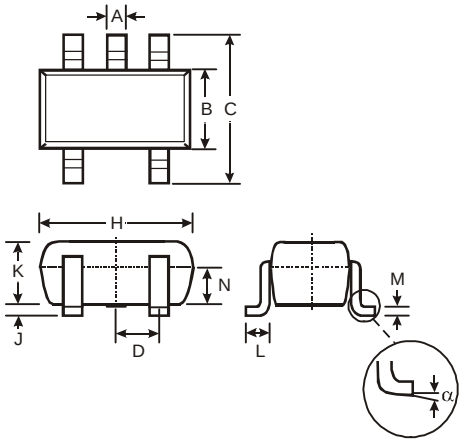

SOT25			
Dim	**Min**	**Max**	**Typ**
A	0.35	0.50	0.38
B	1.50	1.70	1.60
C	2.70	3.00	2.80
D	-	-	0.95
H	2.90	3.10	3.00
J	0.013	0.10	0.05
K	1.00	1.30	1.10
L	0.35	0.55	0.40
M	0.10	0.20	0.15
N	0.70	0.80	0.75
α	0°	8°	-
All Dimensions in mm			

© Diodes Incorporated

Package Outline Dimensions (continued)

Please see http://www.diodes.com/package-outlines.html for the latest version.

(3) Package Type: X2-DFN1010-4 (Type B)

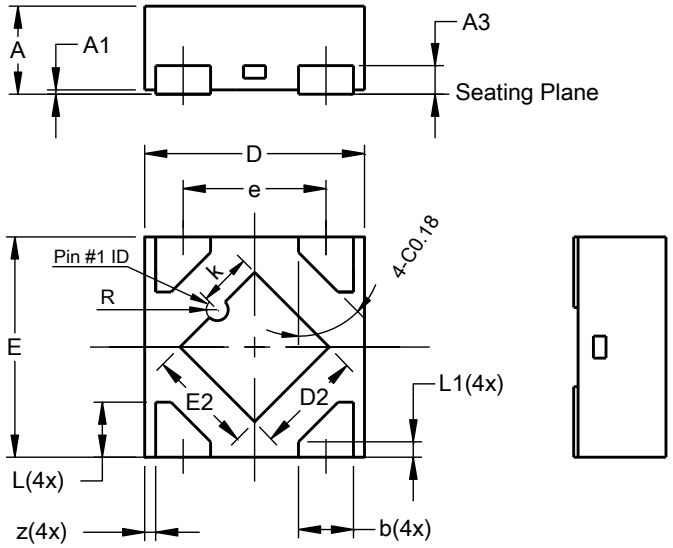

X2-DFN1010-4 (Type B)			
Dim	**Min**	**Max**	**Typ**
A	-	0.40	0.39
A1	0.00	0.05	0.02
A3	-	-	0.13
b	0.20	0.30	0.25
D	0.95	1.05	1.00
D2	0.43	0.53	0.48
E	0.95	1.05	1.00
E2	0.43	0.53	0.48
e	-	-	0.65
k	0.19	0.29	0.24
L	0.20	0.30	0.25
L1	0.02	0.12	0.07
R	0.02	0.08	0.05
z	-	-	0.050
All Dimensions in mm			

Suggested Pad Layout

Please see http://www.diodes.com/package-outlines.html for the latest version.

(1) Package Type: SOT23

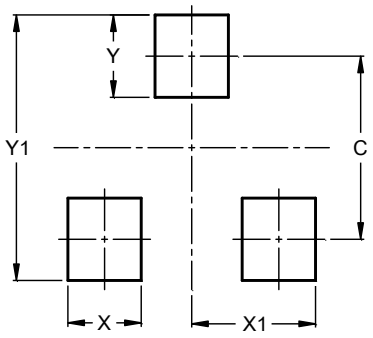

Dimensions	Value (in mm)
C	2.0
X	0.8
X1	1.35
Y	0.9
Y1	2.9

(2) Package Type: SOT25

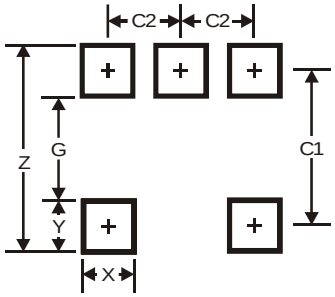

Dimensions	Value
Z	3.20
G	1.60
X	0.55
Y	0.80
C1	2.40
C2	0.95

© Diodes Incorporated

Suggested Pad Layout (continued)

Please see http://www.diodes.com/package-outlines.html for the latest version.

(3) Package Type: X2-DFN1010-4 (Type B)

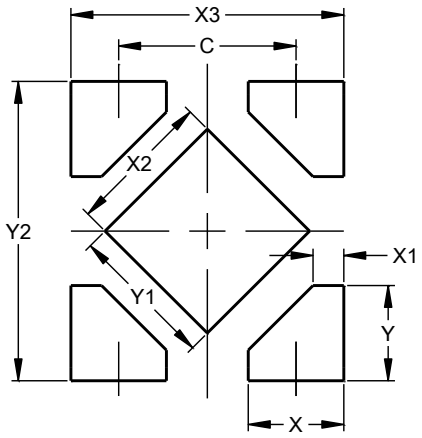

Dimensions	Value (in mm)
C	0.650
X	0.350
X1	0.112
X2	0.530
X3	1.00
Y	0.350
Y1	0.530
Y2	1.100

© Diodes Incorporated

IMPORTANT NOTICE

DIODES INCORPORATED MAKES NO WARRANTY OF ANY KIND, EXPRESS OR IMPLIED, WITH REGARDS TO THIS DOCUMENT, INCLUDING, BUT NOT LIMITED TO, THE IMPLIED WARRANTIES OF MERCHANTABILITY AND FITNESS FOR A PARTICULAR PURPOSE (AND THEIR EQUIVALENTS UNDER THE LAWS OF ANY JURISDICTION).

Diodes Incorporated and its subsidiaries reserve the right to make modifications, enhancements, improvements, corrections or other changes without further notice to this document and any product described herein. Diodes Incorporated does not assume any liability arising out of the application or use of this document or any product described herein; neither does Diodes Incorporated convey any license under its patent or trademark rights, nor the rights of others. Any Customer or user of this document or products described herein in such applications shall assume all risks of such use and will agree to hold Diodes Incorporated and all the companies whose products are represented on Diodes Incorporated website, harmless against all damages.

Diodes Incorporated does not warrant or accept any liability whatsoever in respect of any products purchased through unauthorized sales channel. Should Customers purchase or use Diodes Incorporated products for any unintended or unauthorized application, Customers shall indemnify and hold Diodes Incorporated and its representatives harmless against all claims, damages, expenses, and attorney fees arising out of, directly or indirectly, any claim of personal injury or death associated with such unintended or unauthorized application.

Products described herein may be covered by one or more United States, international or foreign patents pending. Product names and markings noted herein may also be covered by one or more United States, international or foreign trademarks.

This document is written in English but may be translated into multiple languages for reference. Only the English version of this document is the final and determinative format released by Diodes Incorporated.

LIFE SUPPORT

Diodes Incorporated products are specifically not authorized for use as critical components in life support devices or systems without the express written approval of the Chief Executive Officer of Diodes Incorporated. As used herein:

A. Life support devices or systems are devices or systems which:

1. are intended to implant into the body, or

2. support or sustain life and whose failure to perform when properly used in accordance with instructions for use provided in the labeling can be reasonably expected to result in significant injury to the user.

B. A critical component is any component in a life support device or system whose failure to perform can be reasonably expected to cause the failure of the life support device or to affect its safety or effectiveness.

Customers represent that they have all necessary expertise in the safety and regulatory ramifications of their life support devices or systems, and acknowledge and agree that they are solely responsible for all legal, regulatory and safety-related requirements concerning their products and any use of Diodes Incorporated products in such safety-critical, life support devices or systems, notwithstanding any devices- or systems-related information or support that may be provided by Diodes Incorporated. Further, Customers must fully indemnify Diodes Incorporated and its representatives against any damages arising out of the use of Diodes Incorporated products in such safety-critical, life support devices or systems.

Copyright © 2020, Diodes Incorporated

www.diodes.com

ENTEGRECİ

Bu belge www.entegreci.com üzerinden sunulmaktadır.

Elektronik komponent tedarikinde Entegreci

Entegreci, Eskişehir merkezli, Türkiye geneline satış yapan bir elektronik komponent mağazasıdır. Entegreler (IC), mikrodenetleyiciler, transistörler, diyotlar, pasif elemanlar, konnektörler, modüller ve geliştirme kartları tek adetten seri üretim adetlerine kadar satılır. Ürün sayfalarında güncel stok durumunu, fiyatı ve datasheet bağlantısını bulabilirsiniz.

Parça koduyla arama

Üretici parça numarasını yazın; stok ve fiyatı hemen görün.

www.entegreci.com

Ürün kategorileri

Entegreden kapasitöre tüm elektronik komponent kategorileri.

Kategorilere göz atın

Üreticiler

Aradığınız üreticinin ürünlerini tek sayfada inceleyin.

Üreticileri görün

Toplu alım ve teklif

Listede olmayan ya da yüksek adetli parçalar için teklif isteyin.

Teklif isteyin

www.entegreci.com | **destek@entegreci.com** | **0850 305 90 34**

Entegreci is an online electronic components store based in Türkiye. Search by manufacturer part number to see stock, prices and datasheets for integrated circuits, microcontrollers, transistors, passive components and connectors, or request a quote for parts that are not listed.

Bu sayfa Entegreci tarafından eklenmiştir. Belgenin önceki sayfaları asıl yayıncısına aittir ve içeriği değiştirilmemiştir; en güncel sürüm için belgenin yayıncısına başvurun.