Lead-free Green

**AP7361**

# 1A LOW DROPOUT ADJUSTABLE AND FIXED-MODE REGULATOR WITH ENABLE

## Description

The AP7361 is a 1A, adjustable and fixed output voltage, ultra-low dropout linear regulator with enable. The device includes pass element, error amplifier, band-gap reference, current limit and thermal shutdown circuitry. The device is turned on when the EN pin is set to logic high level.

The characteristics of the low dropout voltage and low quiescent current make it suitable for low to medium power applications, for example, laptop computers, audio and video applications, and battery powered devices. The typical quiescent current is approximately 70μA. Built-in current-limit and thermal-shutdown functions prevent IC from damage in fault conditions.

The AP7361 is available in U-DFN3030-8, SOT89-5, SOT223, TO252 and SO-8EP package.

## Features

- Wide input voltage range: 2.2V - 6V
- 150mV Very Low Dropout at 300mA Load
- 500mV Very Low Dropout at 1A Load
- Low Quiescent Current ($I_Q$): 70μA Typical
- Adjustable Output Voltage Range: 1V to 5.0V
- Fixed Output Options: 1V to 3.3V
- Very-Fast Transient Response
- High PSRR
- Accurate Voltage Regulation
- Current Limiting and Short Circuit Protection
- Thermal Shutdown Protection
- Stable with Ceramic Output Capacitor ≥ 2.2μF
- Ambient Temperature Range -40°C to +85°C
- U-DFN3030-8, SOT89-5, SOT223/SOT223R, TO252/TO252R and SO-8EP
- Available in "Green" Molding Compound (No Br, Sb)
- **Totally Lead-Free & Fully RoHS Compliant (Notes 1 & 2)**
- **Halogen and Antimony Free. "Green" Device (Note 3)**

## Pin Assignments

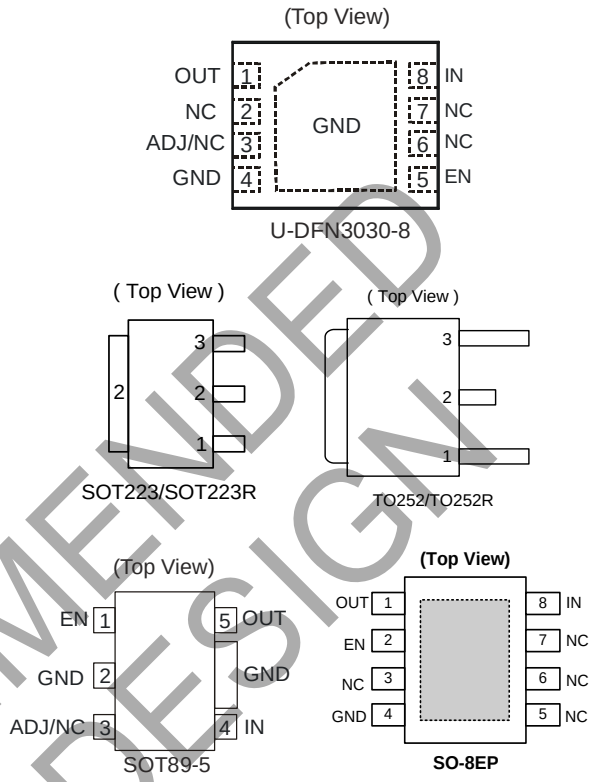


## Applications

- Servers and Laptops
- FPGA and DSP Core or I/O Power
- TV, and Home Electrical Appliances
- Battery-Powered Devices

Notes:
1. No purposely added lead. Fully EU Directive 2002/95/EC (RoHS) & 2011/65/EU (RoHS 2) compliant.
2. See http://www.diodes.com/quality/lead_free.html for more information about Diodes Incorporated's definitions of Halogen- and Antimony-free, "Green" and Lead-free.
3. Halogen- and Antimony-free "Green" products are defined as those which contain <900ppm bromine, <900ppm chlorine (<1500ppm total Br + Cl) and <1000ppm antimony compounds.

NOT RECOMMENDED FOR NEW DESIGN


© Diodes Incorporated

## Typical Applications Circuit

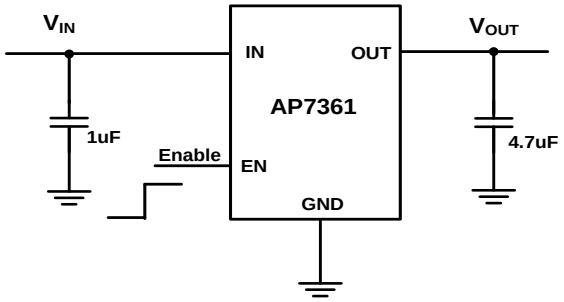


Fixed Version
U-DFN3030-8, SOT89-5 and SO-8EP

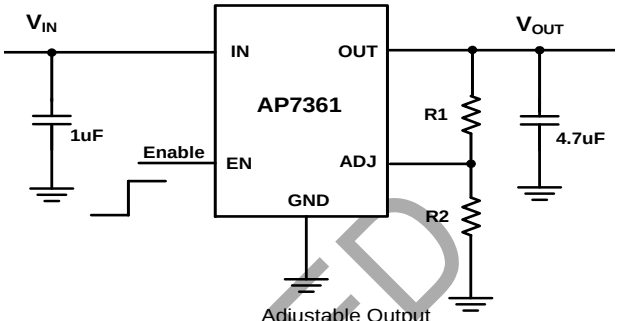


Adjustable Output
U-DFN3030-8 and SOT89-5

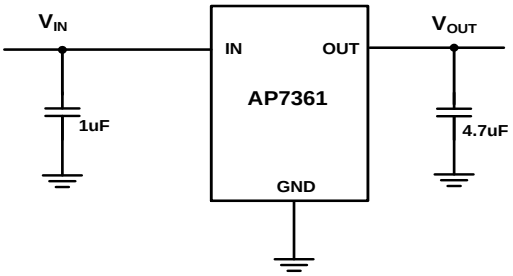


Fixed Version
TO252, SOT223

NOT RECOMMENDED FOR NEW DESIGN

## Pin Descriptions

| Pin Name | Pin Number | | | | | | | Function |
|---|---|---|---|---|---|---|---|---|
| | U-DFN3030-8 | SOT89-5 | TO252 | TO252R | SOT223 | SOT223R | SO-8EP | |
| IN | 8 | 4 | 1 | 3 | 1 | 3 | 8 | The input of the regulator. Bypass to ground through at least 1μF ceramic capacitor. |
| OUT | 1 | 5 | 3 | 2 | 3 | 2 | 1 | The output of the regulator. Bypass to ground through at least 2.2μF ceramic capacitor. For improved ac load response a larger capacitor is recommended. |
| GND | 4 | 2 | 2 | 1 | 2 | 1 | 4 | Ground |
| ADJ | 3 | 3 | NA | NA | NA | NA | NA | Adjustable voltage version only – a resistor divider from this pin to the OUT pin and ground sets the output voltage. |
| EN | 5 | 1 | NA | NA | NA | NA | 2 | Enable input, active high |
| NC | 2, 6, 7 | NA | NA | NA | NA | NA | 3, 5, 6, 7 | No connection |


© Diodes Incorporated

## Functional Block Diagram

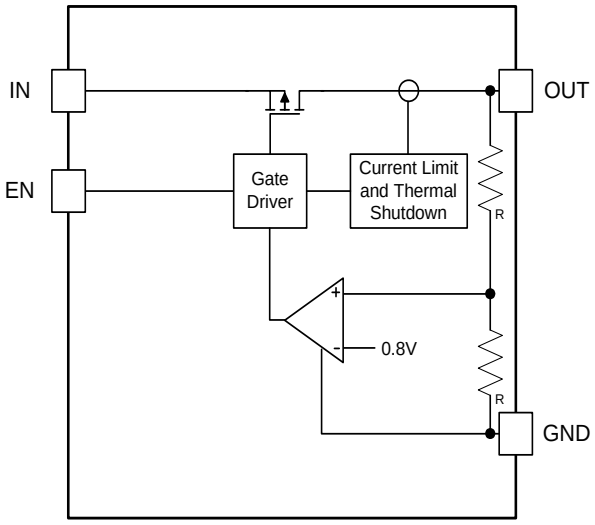


Fixed Version U-DFN3030-8, SOT89-5 and SO-8EP

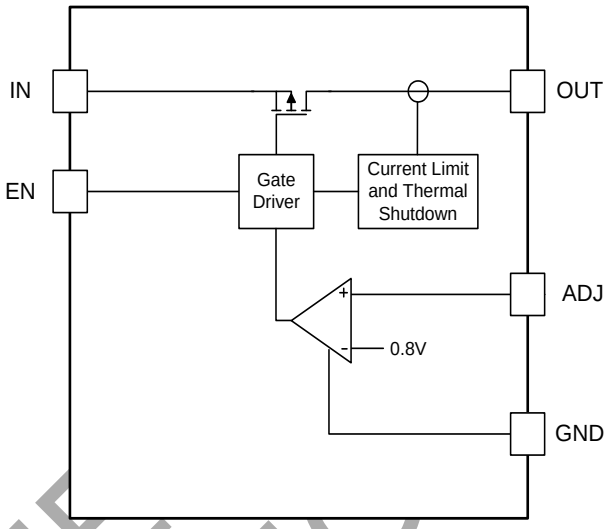


Adjustable Version U-DFN3030-8 and SOT89-5

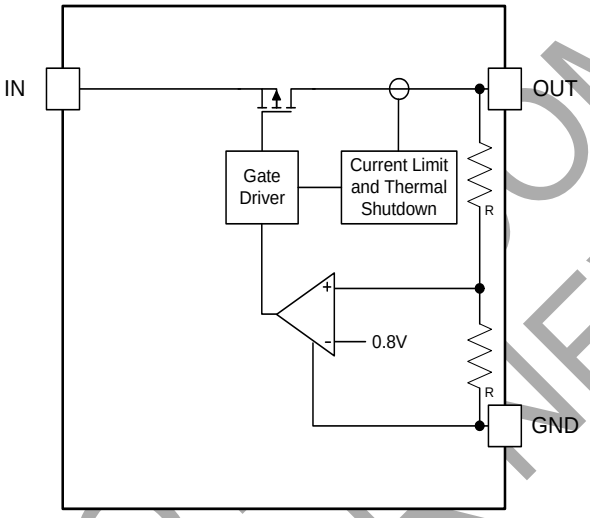


Fixed Version
TO252, SOT223

NOT RECOMMENDED FOR NEW DESIGN


© Diodes Incorporated

## Absolute Maximum Ratings (@$T_A$ = +25°C, unless otherwise specified.)

| Symbol | Parameter | | Ratings | Unit |
|---|---|---|---|---|
| ESD HBM | Human Body Model ESD Protection | | > 2 | KV |
| ESD MM | Machine Model ESD Protection (Note 5) | | > 200 | V |
| $V_{IN}$ | Input Voltage | | 6.5 | V |
| | OUT, ADJ, EN Voltage | | $V_{IN}$ +0.3 | V |
| $T_J$ | Operating Junction Temperature Range | | -40 to +150 | °C |
| $T_{ST}$ | Storage Temperature Range | | -65 to +150 | °C |
| $P_D$ | Power Dissipation (Note 4) | | Internally limited by maximum junction temperature of +150°C | |
| $P_D$ | Power Dissipation (Note 4) | U-DFN3030-8 | 1,700 | mW |
| | | TO252 | 1,250 | |
| | | SOT223 | 1,100 | |
| | | SOT89-5 | 800 | |
| | | SO-8EP | 1,190 | |

Notes: 4. Ratings apply to ambient temperature at +25°C.
5. ESD MM rating at 150V for EN pin.

Stresses greater than the 'Absolute Maximum Ratings' specified above, may cause permanent damage to the device. These are stress ratings only; functional operation of the device at these or any other conditions exceeding those indicated in this specification is not implied. Device reliability may be affected by exposure to absolute maximum rating conditions for extended periods of time.

## Recommended Operating Conditions (@$T_A$ = +25°C, unless otherwise specified.)

| Symbol | Parameter | Min | Max | Unit |
|---|---|---|---|---|
| $V_{IN}$ | Input Voltage | 2.2 | 6.0 | V |
| $I_{OUT}$ | Output Current (Note 6) | 0 | 1.0 | A |
| $T_A$ | Operating Ambient Temperature | -40 | +85 | °C |

Note: 6. The device maintains a stable, regulated output voltage without a load current. When the output current is large, attention should be given to the limitation of the package power dissipation.

NOT RECOMMENDED FOR NEW DESIGN


© Diodes Incorporated

## Electrical Characteristics (@$T_A$ = +25°C, $V_{IN}$ = $V_{OUT}$ +1V, $C_{IN}$ = 1µF, $C_{OUT}$ = 4.7µF, $V_{EN}$ = $V_{IN}$ unless otherwise specified.)

| Symbol | Parameter | Test Conditions | Min | Typ | Max | Unit |
|---|---|---|---|---|---|---|
| $V_{REF}$ | FB Reference Voltage | $I_{OUT}$ = 10mA, $T_A$ = +25°C | | 0.8 | | V |
| $I_{ADJ}$ | ADJ Pin Leakage | | | 0.1 | 0.5 | µA |
| $I_Q$ | Input Quiescent Current | Enabled, $I_{OUT}$ = 0A | | 70 | 90 | µA |
| $I_{SHDN}$ | Input Shutdown Current | $V_{EN}$ = 0V, $I_{OUT}$ = 0A | -1 | 0.05 | 1 | µA |
| $V_{OUT}$ | Output Voltage Accuracy | $I_{OUT}$ = 100mA, $T_A$ = +25°C | -1 | | 1 | % |
| | | $I_{OUT}$ = 100mA, -40°C ≤ $T_A$ ≤ +85°C | -2 | | 2 | |
| | | Over $V_{IN}$, $I_{OUT}$, and $T_A$ | -3 | ±0.5 | 3 | |
| $\frac{\Delta VOUT}{\Delta VIN \times V_{OUT}}$ | Line Regulation | $V_{IN}$ = $V_{OUT}$ +1V to 6V, $I_{OUT}$ = 100mA; $T_A$ = +25°C | | 0.01 | 0.1 | %/V |
| | | -40°C ≤$T_A$ ≤ +85°C | | | 0.2 | |
| $\Delta V_{OUT} / V_{OUT}$ | Load Regulation | $I_{OUT}$ from 1mA to 300mA | -1.0 | 0.5 | 1.0 | % |
| | | $I_{OUT}$ from 1mA to 1A | -1.0 | 0.5 | 1.0 | % |
| $V_{DROPOUT}$ | Dropout Voltage (Note 7) | $I_{OUT}$ = 300mA | | 150 | 200 | mV |
| | | $I_{OUT}$ = 500mA | | 250 | 350 | |
| | | $I_{OUT}$ = 1A | | 500 | 700 | |
| $V_{IL}$ | EN Input Logic Low Voltage | | 0 | | 0.3 | V |
| $V_{IH}$ | EN Input Logic High Voltage | | 1.0 | | $V_{IN}$ | V |
| $I_{EN}$ | EN Input Leakage | $V_{IN}$ = 6V, $V_{EN}$ = 0V or 6V | -0.1 | 0.01 | 0.1 | µA |
| $I_{LIMIT}$ | Current Limit | $V_{IN}$ = $V_{OUT}$ +1V | 1.1 | 1.5 | | A |
| $I_{SHORT}$ | Short-Circuit Current | $V_{IN}$ = $V_{OUT}$ +1V, Output Voltage < 15% $V_{OUT}$ | | 200 | | mA |
| PSRR | Power Supply Rejection Ratio (Note 8) | f = 1KHz, $I_{OUT}$ = 100mA | 60 | 65 | | dB |
| | | f = 10KHz, $I_{OUT}$ = 100mA | | 45 | | |
| $t_{ST}$ | Start-Up Time | $V_{OUT}$ = 3V, $C_{OUT}$ = 1µF, $R_L$ = 30Ω | | 200 | | µs |
| $\frac{\Delta VOUT}{\Delta T_A \times VOUT}$ | Output Voltage Temperature Coefficient | $I_{OUT}$ = 100mA, -40°C ≤ $T_A$ ≤ +85°C | | ±130 | | ppm/°C |
| $T_{SHDN}$ | Thermal Shutdown Threshold | | | 150 | | °C |
| $T_{HYS}$ | Thermal Shutdown Hysteresis | | | 20 | | °C |
| $\theta_{JA}$ | Thermal Resistance Junction-to-Ambient | U-DFN3030-8 (Note 9) | | 70 | | °C/W |
| | | TO252 (Note 9) | | 95 | | |
| | | SOT223 (Note 9) | | 110 | | |
| | | SOT89-5 (Note 9) | | 150 | | |
| | | SO-8EP (Note 9) | | 100 | | |

Notes:
7. Dropout voltage is the voltage difference between the input and the output at which the output voltage drops 2% below its nominal value. This parameter only applies to output voltages above 1.5V since minimum $V_{IN}$ = 2.2V.
8. For $V_{IN}$ ≥ 2.5V and $V_{IN}$ = $V_{OUT}$ +1V. For $V_{IN}$ < 2.5V, the PSRR performance may be reduced.
9. Test condition: DFN3030E-8, SO-8EP device mounted on 2"x2", FR-4 substrate PCB, with minimum recommended pad on top layer and thermal vias to bottom layer ground plane. TO252 device mounted on 2"x2" FR-4 substrate PC board, 2oz copper, with minimum recommended pad layout. SOT223 the device is mounted on FR-4 substrate PC board, with minimum recommended pad layout. SOT89-5L device mounted on 1"x1" FR-4 substrate PC board, with minimum recommended pad layout.

NOT RECOMMENDED FOR NEW DESIGN


© Diodes Incorporated

## Typical Performance Characteristics

**Start-up Time**

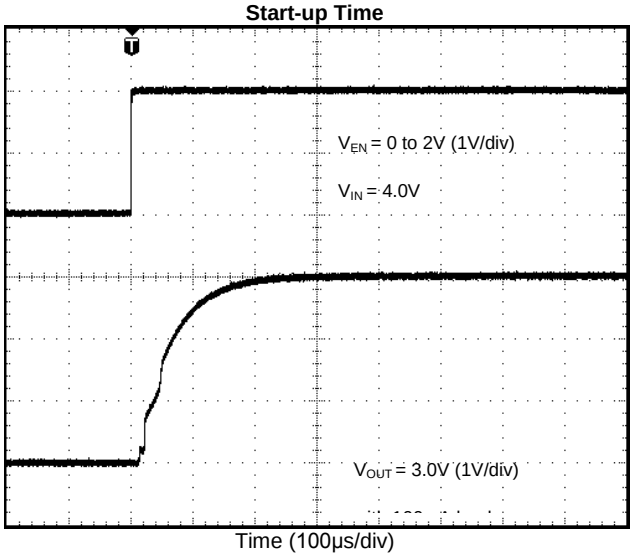


**Start-up Time**

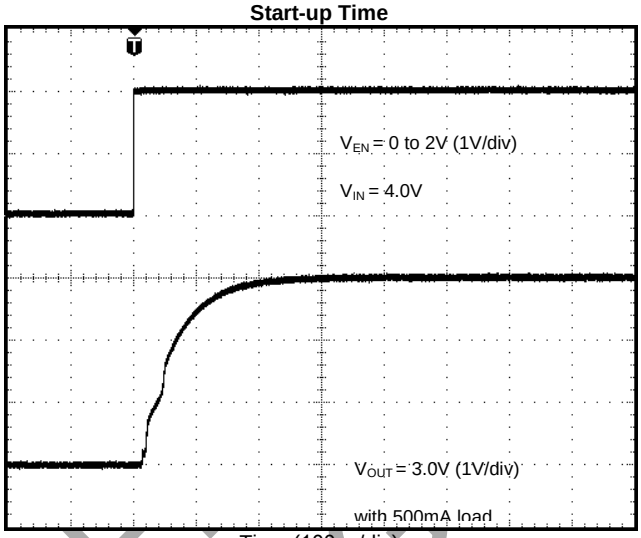


**Line Transient Response**

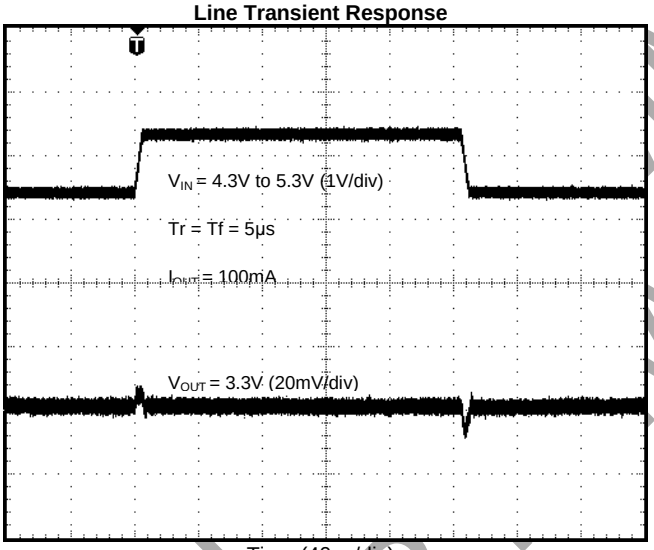


**Line Transient Response**

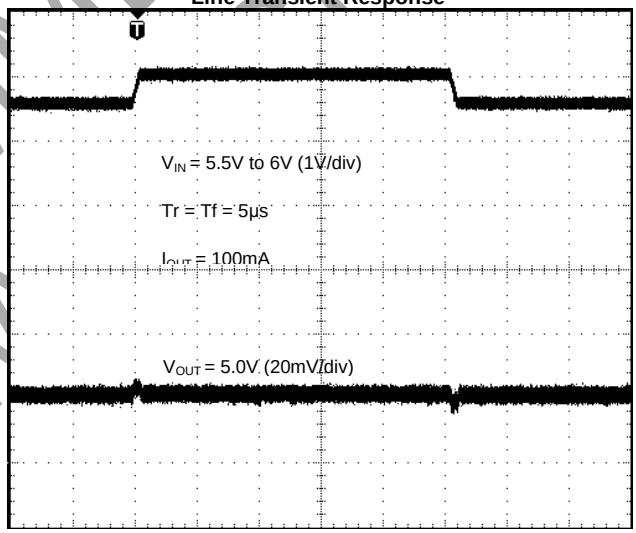


NOT RECOMMENDED FOR NEW DESIGN


© Diodes Incorporated

## Typical Performance Characteristics (cont.)

**Load Transient Response**

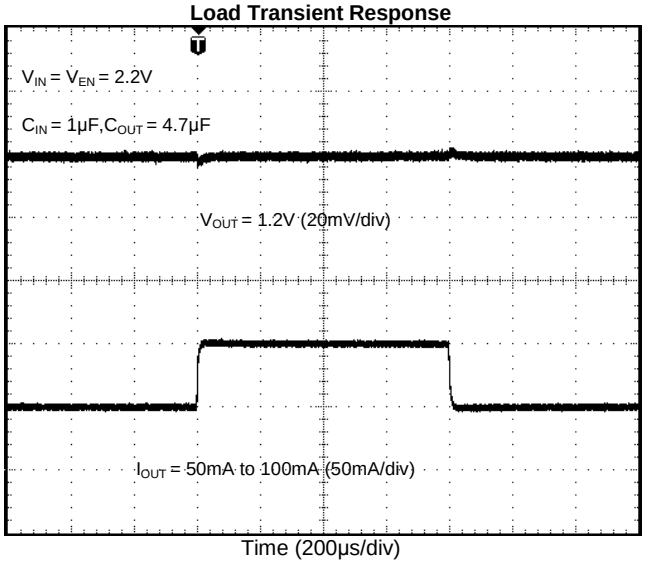


**Load Transient Response**

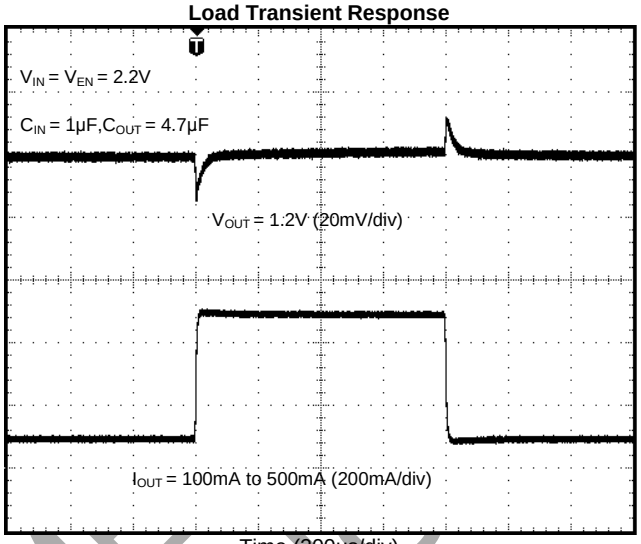


**Load Transient Response**

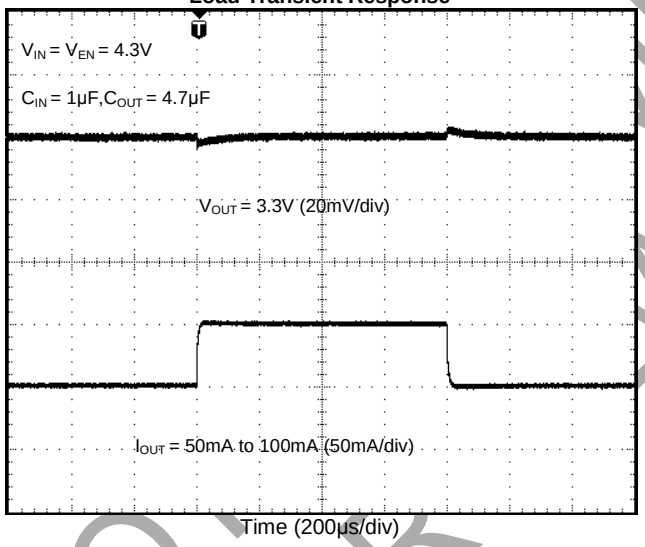


**Load Transient Response**

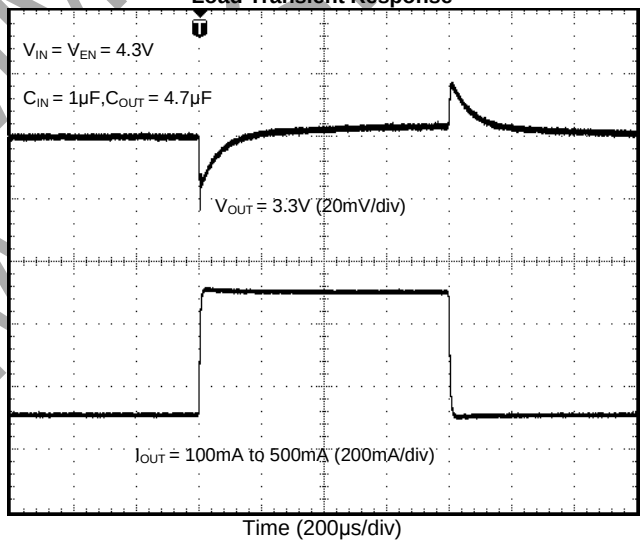


NOT RECOMMENDED FOR NEW DESIGN


© Diodes Incorporated

## Typical Performance Characteristics (cont.)

**Load Transient Response**

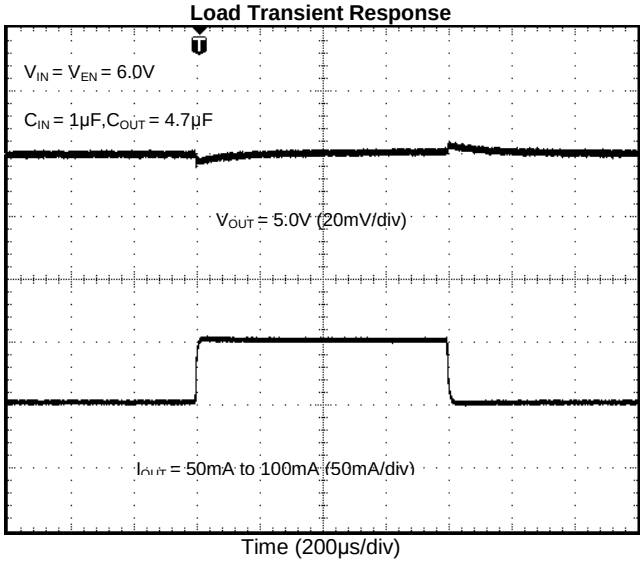


**Load Transient Response**

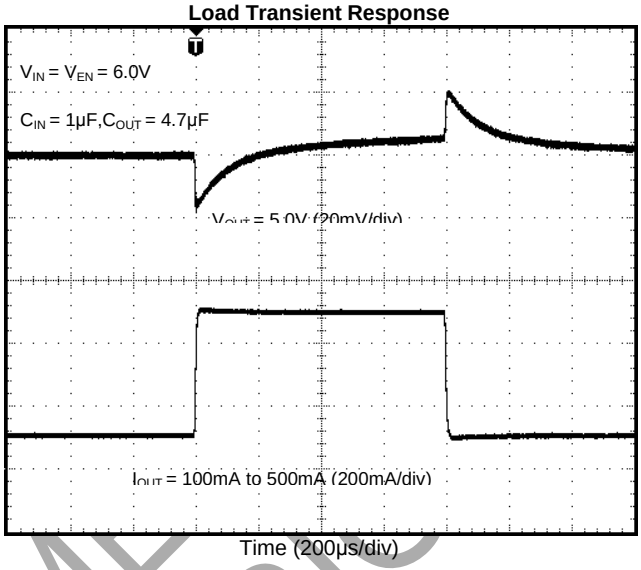


**PSRR vs Frequency**

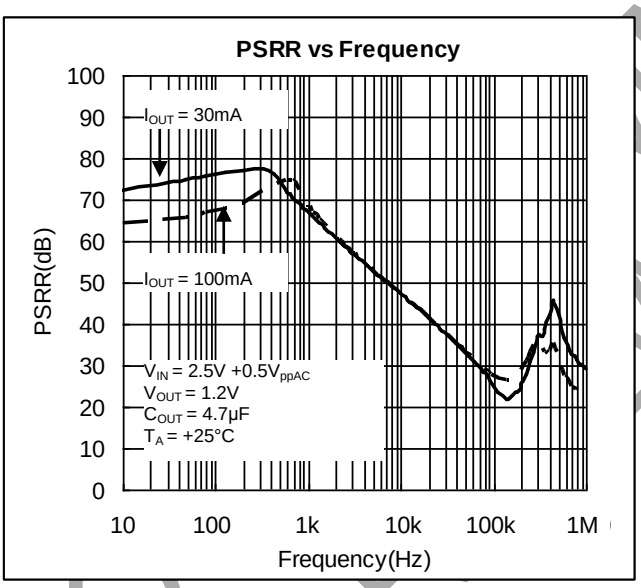


**PSRR vs Frequency**

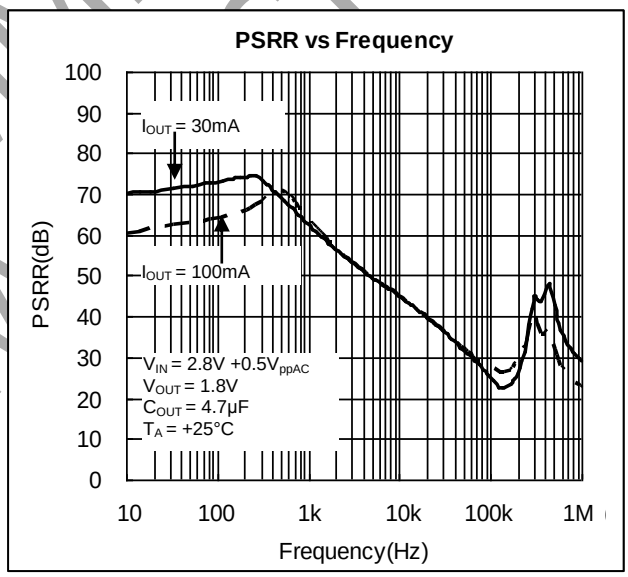


NOT RECOMMENDED FOR NEW DESIGN


© Diodes Incorporated

## Typical Performance Characteristics (cont.)

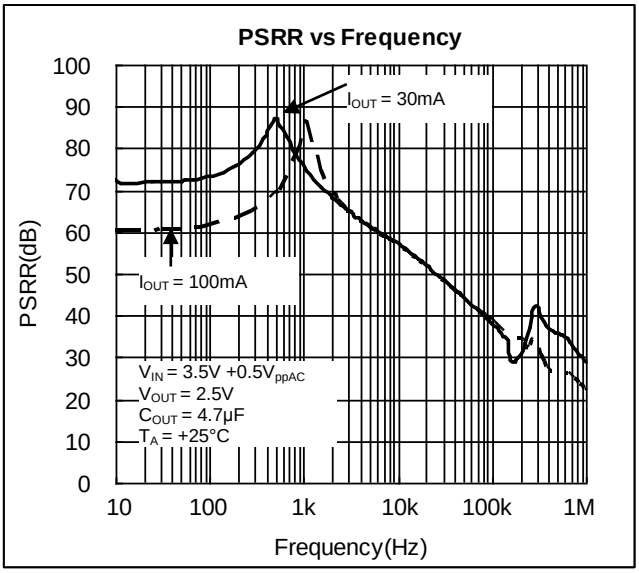


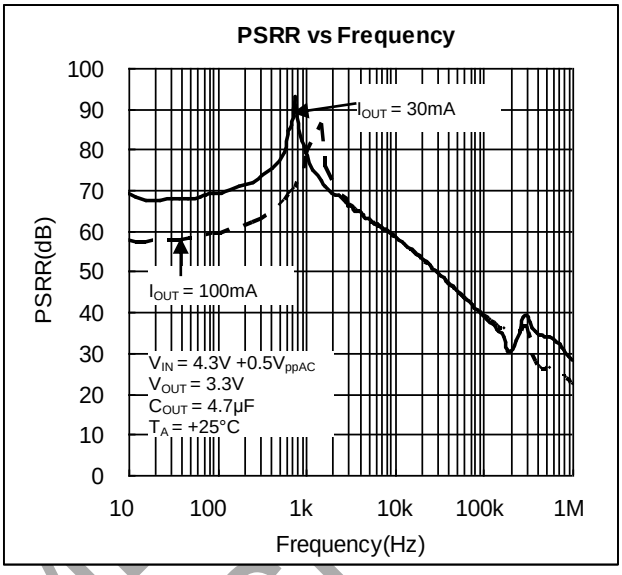


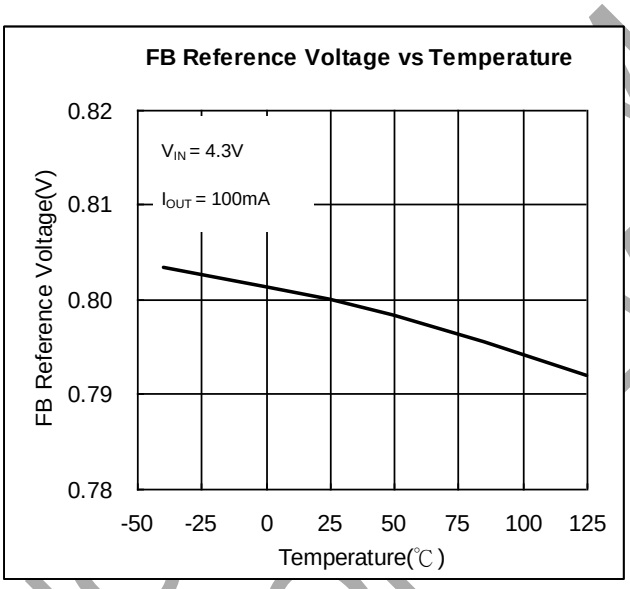


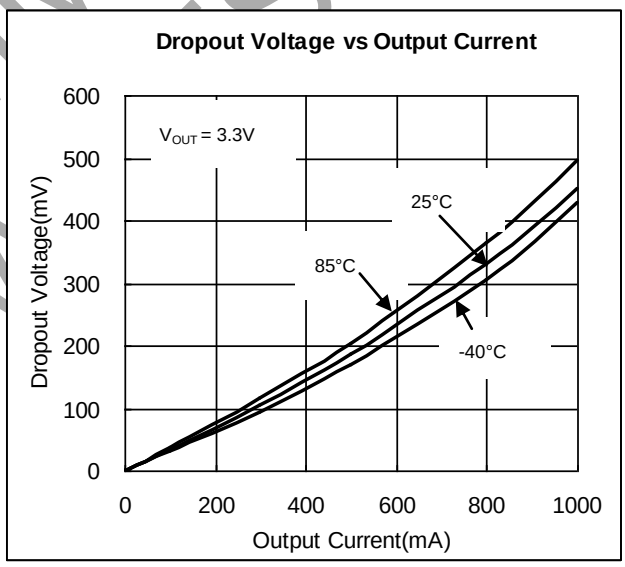


NOT RECOMMENDED FOR NEW DESIGN


© Diodes Incorporated

## Typical Performance Characteristics (cont.)

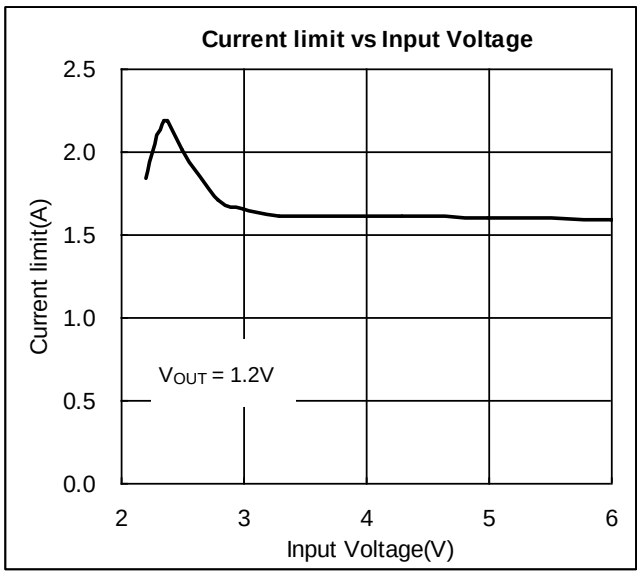


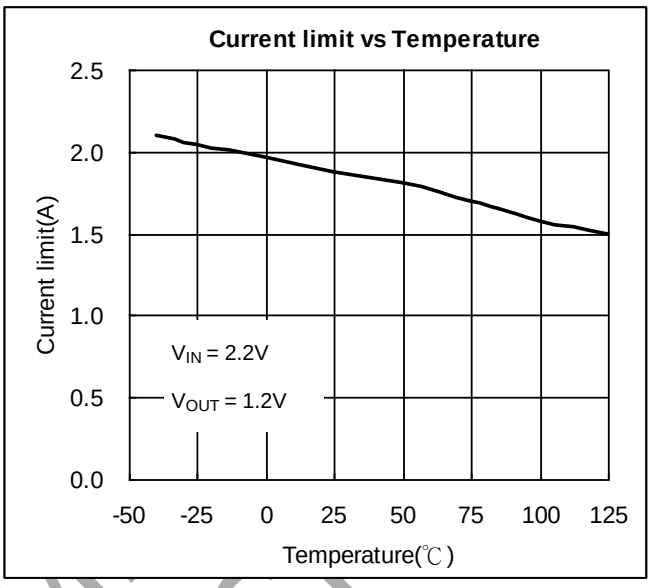


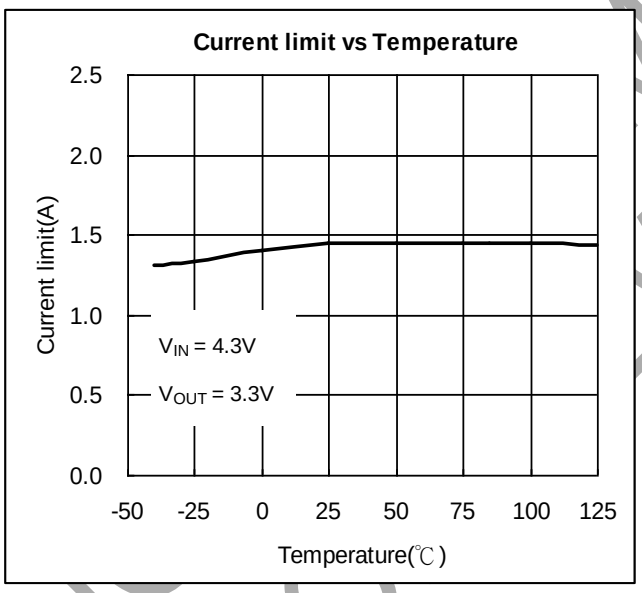


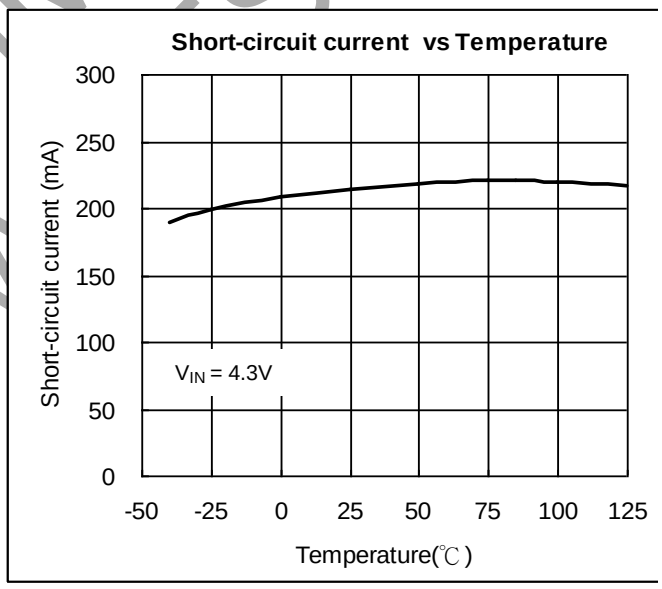


NOT RECOMMENDED FOR NEW DESIGN


© Diodes Incorporated

## Typical Performance Characteristics (cont.)

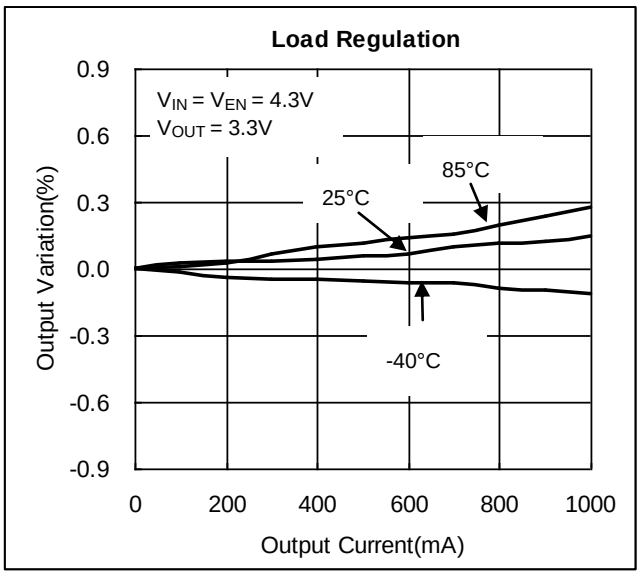


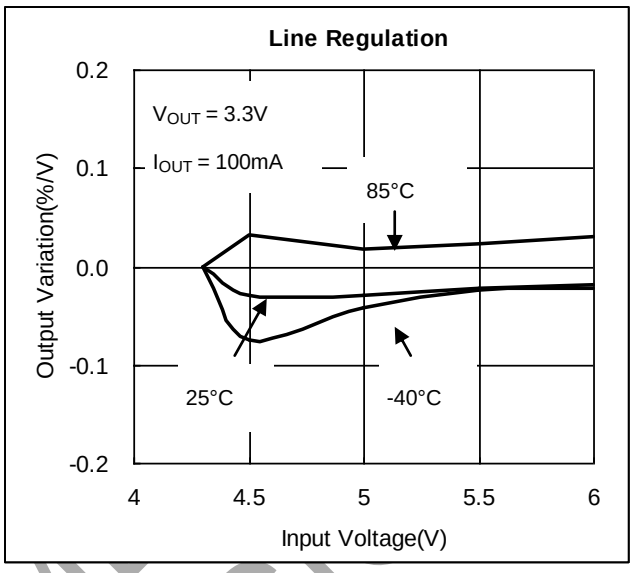


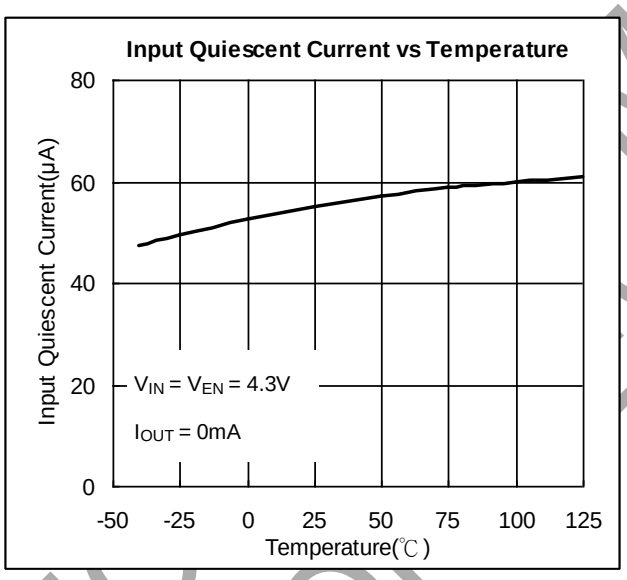


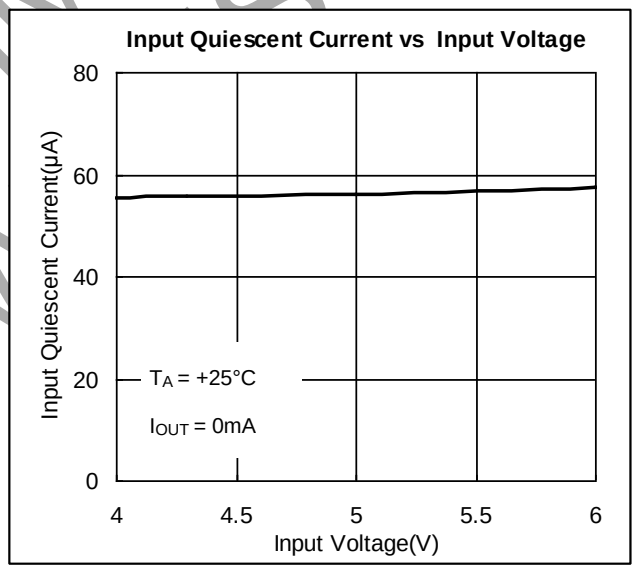


NOT RECOMMENDED FOR NEW DESIGN


© Diodes Incorporated

## Application Information

### Input Capacitor

A 1μF ceramic capacitor is recommended between IN and GND pins to decouple input power supply glitch and noise. The amount of the capacitance may be increased without limit. This input capacitor must be located as close as possible to the device to assure input stability and reduce noise. For PCB layout, a wide copper trace is required for both IN and GND pins. A lower ESR capacitor type allows the use of less capacitance, while a higher ESR type requires more capacitance.

### Output Capacitor

The output capacitor is required to stabilize and improve the transient response of the LDO. The AP7361 is stable with very small ceramic output capacitors. Using a ceramic capacitor value that is at least 2.2μF with 10mΩ ≦ ESR ≦ 300mΩ on the output ensures stability. Higher capacitance values help to improve line and load transient response. The output capacitance may be increased to keep low undershoot and overshoot. Output capacitor must be placed as close as possible to OUT and GND pins.

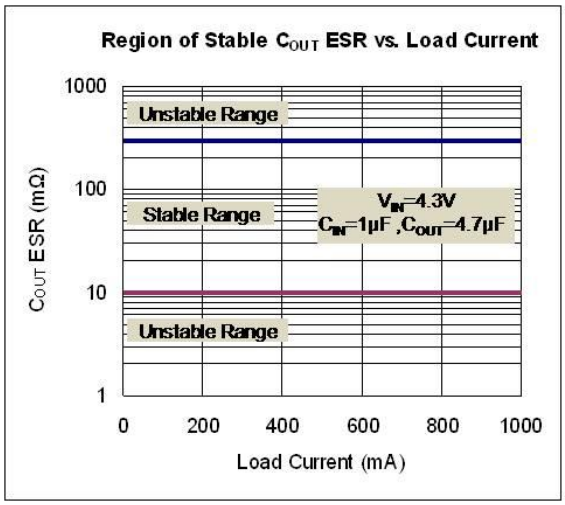


### Adjustable Operation

Adjustable operation is not available in the SOT223 TO252 and SO-8EP package. The AP7361 provides output voltage from 0.8V to 5.0V through external resistor divider as shown below.

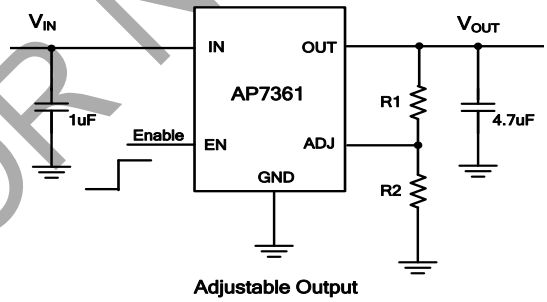


Adjustable Output

The output voltage is calculated by:

$$V_{OUT} = V_{REF}\left(1+\frac{R_1}{R_2}\right)$$

Where $V_{REF}$ = 0.8V (the internal reference voltage)

Rearranging the equation will give the following that is used for adjusting the output to a particular voltage:

$$R_1 = R_2\left(\frac{V_{OUT}}{V_{REF}}-1\right)$$

To maintain the stability of the internal reference voltage, $R_2$ need to be kept smaller than 80kΩ.

NOT RECOMMENDED FOR NEW DESIGN


© Diodes Incorporated

## Application Information

### No Load Stability

Other than external resistor divider, no minimum load is required to keep the device stable. The device will remain stable and regulated in no load condition.

### ON/OFF Input Operation

The ON/OFF feature is not available in the SOT223 and TO252 package.

The AP7361 is turned on by setting the EN pin high, and is turned off by pulling it low. If this feature is not used, the EN pin should be tied to IN pin to keep the regulator output on at all time. To ensure proper operation, the signal source used to drive the EN pin must be able to swing above and below the specified turn-on/off voltage thresholds listed in the Electrical Characteristics section under $V_{IL}$ and $V_{IH}$.

### Current Limit Protection

When output current at OUT pin is higher than current limit threshold, the current limit protection will be triggered and clamp the output current to prevent overcurrent and to protect the regulator from damage due to overheating.

### Short-Circuit Protection

When OUT pin is short-circuit to GND, short circuit protection will be triggered and clamp the output current to approximately 200mA. Full current is restored when the output voltage exceeds 15% of Vout. This feature protects the regulator from overcurrent and damage due to overheating.

### Thermal Shutdown Protection

Thermal protection disables the output when the junction temperature rises to approximately +150°C, allowing the device to cool down. When the junction temperature reduces to approximately +130°C the output circuitry is enabled again. Depending on power dissipation, thermal resistance, and ambient temperature, the thermal protection circuit may cycle on and off. This cycling limits the heat dissipation of the regulator, protecting it from damage due to overheating.

### Ultra Fast Start-up

After enabled, the AP7361 is able to provide full power in as little as tens of microseconds, typically 200µs, without sacrificing low ground current. This feature will help load circuitry move in and out of standby mode in real time, eventually extend battery life for mobile phones and other portable devices.

### Low Quiescent Current

The AP7361, consuming only around 70µA for all input range, provides great power saving in portable and low power applications.

### Power Dissipation

The device power dissipation and proper sizing of the thermal plane that is connected to the thermal pad is critical to avoid thermal shutdown and ensure reliable operation. Power dissipation of the device depends on input voltage and load conditions and can be calculated by:

$$P_D = (V_{IN} - V_{OUT}) \times I_{OUT}$$

The maximum power dissipation, handled by the device, depends on the maximum junction to ambient thermal resistance, maximum ambient temperature, and maximum device junction temperature, which can be calculated by the equation in the following:

$$P_D(max@T_A) = \frac{(+150°C - T_A)}{R_{\theta JA}}$$

NOT RECOMMENDED FOR NEW DESIGN


© Diodes Incorporated

## Ordering Information

**AP7361 - XX XXX - X**

| Output | Package | Packing |
|---|---|---|
| Blank : ADJ<br>10 : 1.0V<br>12 : 1.2V<br>15 : 1.5V<br>18 : 1.8V<br>25 : 2.5V<br>28 : 2.8V<br>33 : 3.3V | FGE : U-DFN3030-8 | 7 : Tape & Reel |

**AP7361 - XX X - XX**

| Output | Package | Packing |
|---|---|---|
| Blank : adj *<br>10 : 1.0V<br>12 : 1.2V<br>15 : 1.5V<br>18 : 1.8V<br>25 : 2.5V<br>28 : 2.8V<br>33 : 3.3V | DR : TO252R<br>ER : SOT223R | 13 : Tape & Reel |

**AP7361 - XX X - XX**

| Output | Package | Packing |
|---|---|---|
| Blank : ADJ *<br>10 : 1.0V<br>12 : 1.2V<br>15 : 1.5V<br>18 : 1.8V<br>25 : 2.5V<br>28 : 2.8V<br>33 : 3.3V | Y : SOT89-5<br>D : TO252<br>E : SOT223<br>SP : SO-8EP | 13 : Tape & Reel |

* adjustable only in SOT89-5

NOT RECOMMENDED FOR NEW DESIGN

| Part Number | Package Code | Packaging | 7"/13" Tape and Reel | |
|---|---|---|---|---|
| | | | Quantity | Part Number Suffix |
| AP7361-XXFGE-7 | FGE | U-DFN3030-8 | 3,000/Tape & Reel | -7 |
| AP7361-XXY-13 | Y | SOT89-5 | 2,500/Tape & Reel | -13 |
| AP7361-XXD-13 | D | TO252 | 2,500/Tape & Reel | -13 |
| AP7361-XXDR-13 | DR | TO252R | 2,500/Tape & Real | -13 |
| AP7361-XXE-13 | E | SOT223 | 2,500/Tape & Reel | -13 |
| AP7361-XXER-13 | ER | SOT223R | 2,500/Tape & Reel | -13 |
| AP7361-XXSP-13 | SP | SO-8EP | 2,500/Tape & Reel | -13 |


© Diodes Incorporated

## Marking Information

**(1) U-DFN3030-8**

**( Top View )**

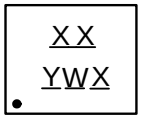


XX : Identification Code
Y : Year : 0~9
W : Week : A~Z : 1~26 week;
a~z : 27~52 week; z represents
52 and 53 week
X : A~Z : Internal code

| Device | Package | Identification Code |
|---|---|---|
| AP7361ADJ | U-DFN3030-8 | PA |
| AP7361-10 | U-DFN3030-8 | PB |
| AP7361-12 | U-DFN3030-8 | PC |
| AP7361-15 | U-DFN3030-8 | PD |
| AP7361-18 | U-DFN3030-8 | PE |
| AP7361-25 | U-DFN3030-8 | PF |
| AP7361-28 | U-DFN3030-8 | PG |
| AP7361-33 | U-DFN3030-8 | PH |

**(2) SOT89-5**

**(Top View)**

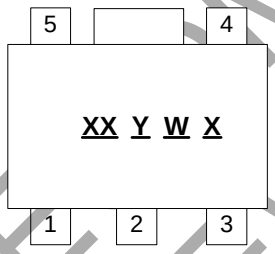


XX : Identification code
Y : Year : 0~9
W : Week : A~Z : 1~26 week;
a~z : 27~52 week;
z represents 52 and 53 week
X : A~Z : Internal code

| Device | Package | Identification Code |
|---|---|---|
| AP7361ADJ | SOT89-5 | PA |
| AP7361-10 | SOT89-5 | PB |
| AP7361-12 | SOT89-5 | PC |
| AP7361-15 | SOT89-5 | PD |
| AP7361-18 | SOT89-5 | PE |
| AP7361-25 | SOT89-5 | PF |
| AP7361-28 | SOT89-5 | PG |
| AP7361-33 | SOT89-5 | PH |

NOT RECOMMENDED FOR NEW DESIGN


© Diodes Incorporated

## Marking Information (cont.)

**(3) TO252**

Pin 1: $V_{IN}$, Pin 2: GND, Pin 3: $V_{OUT}$

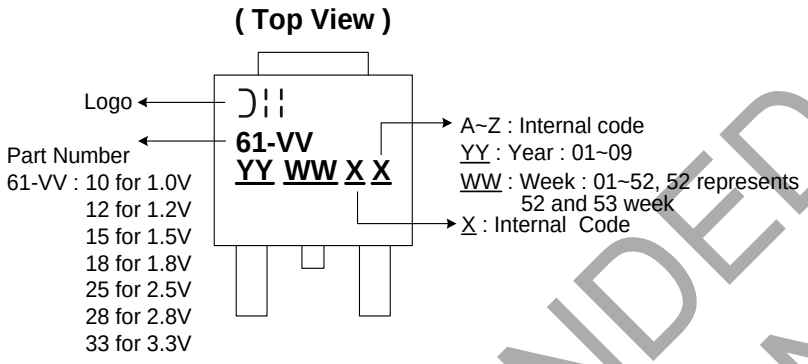


**(4) SOT223**

Pin 1: $V_{IN}$, Pin 2: GND, Pin 3: $V_{OUT}$

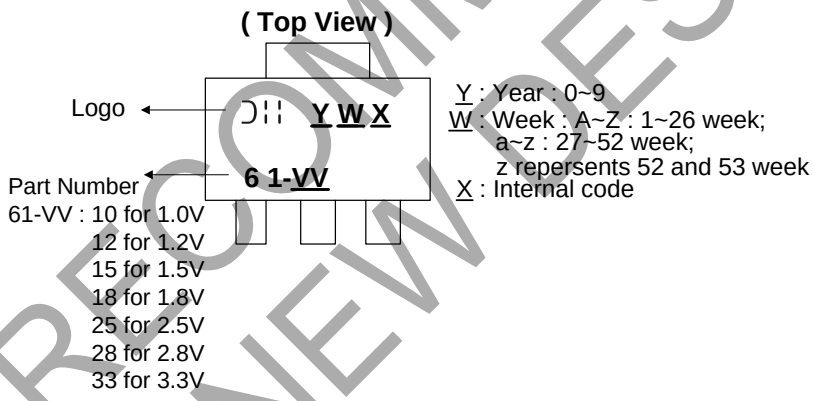


**(5) SOT223R**

Pin 1: GND, Pin 2: $V_{OUT}$, Pin 3: $V_{IN}$

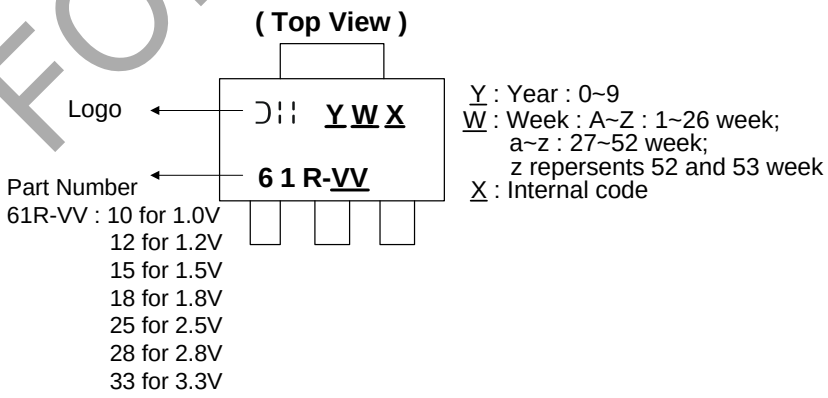


NOT RECOMMENDED FOR NEW DESIGN


© Diodes Incorporated

## Marking Information (cont.)

**(6) TO252-R**

Pin 1: GND, Pin 2: $V_{OUT}$, Pin 3: $V_{IN}$

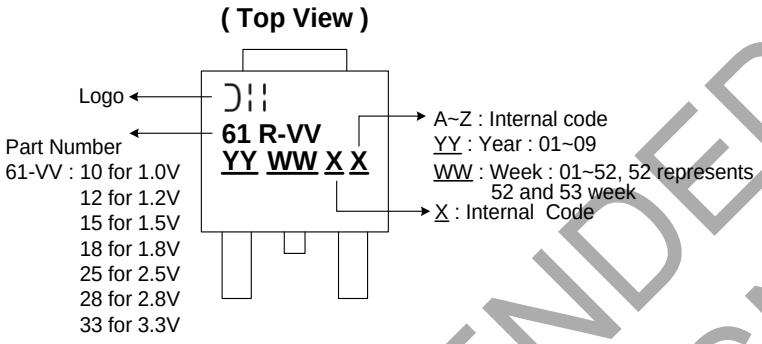


**(7) SO-8EP**

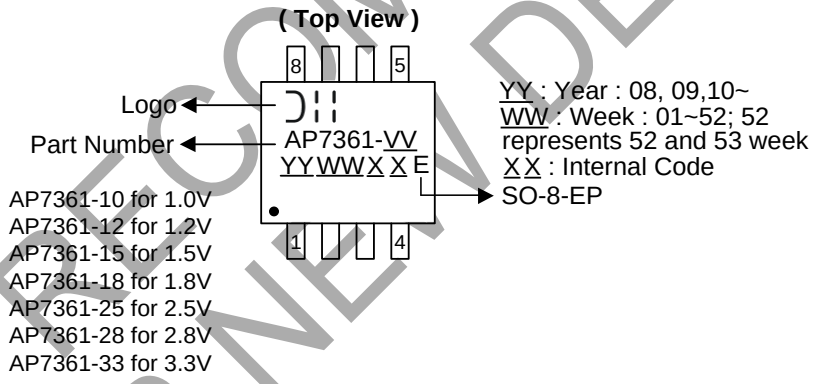


NOT RECOMMENDED FOR NEW DESIGN


© Diodes Incorporated

## Package Outline Dimensions (All dimensions in mm.)

Please see http://www.diodes.com/package-outlines.html for the latest version.

**(1): U-DFN3030-8**

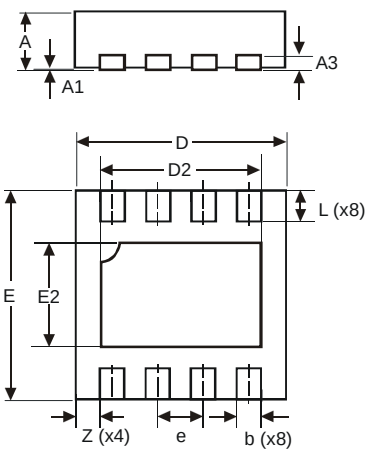


| U-DFN3030-8 Type E | | | |
|---|---|---|---|
| **Dim** | **Min** | **Max** | **Typ** |
| **A** | 0.57 | 0.63 | 0.60 |
| **A1** | 0 | 0.05 | 0.02 |
| **A3** | – | – | 0.15 |
| **b** | 0.20 | 0.30 | 0.25 |
| **D** | 2.95 | 3.05 | 3.00 |
| **D2** | 2.15 | 2.35 | 2.25 |
| **E** | 2.95 | 3.05 | 3.00 |
| **e** | – | – | 0.65 |
| **E2** | 1.40 | 1.60 | 1.50 |
| **L** | 0.30 | 0.60 | 0.45 |
| **Z** | – | – | 0.40 |
| **All Dimensions in mm** | | | |

**(2): SOT89-5**

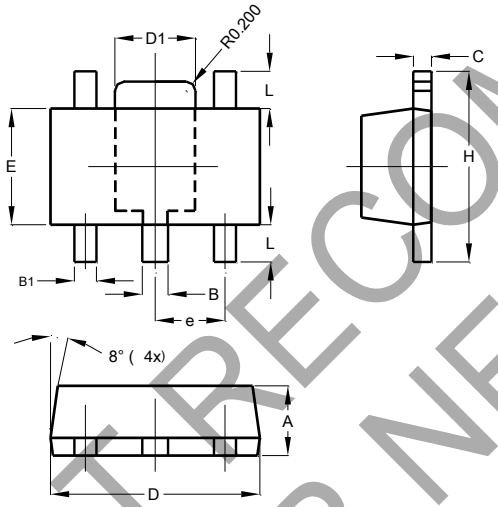


| SOT89-5 | | | |
|---|---|---|---|
| **Dim** | **Min** | **Max** | **Typ** |
| **A** | 1.40 | 1.60 | 1.50 |
| **B** | 0.50 | 0.62 | 0.56 |
| **B1** | 0.44 | 0.54 | 0.48 |
| **C** | 0.35 | 0.43 | 0.38 |
| **D** | 4.40 | 4.60 | 4.50 |
| **D1** | 1.62 | 1.83 | 1.733 |
| **E** | 2.40 | 2.60 | 2.50 |
| **e** | - | - | 1.50 |
| **H** | 3.95 | 4.25 | 4.10 |
| **L** | 0.65 | 0.95 | 0.80 |
| **All Dimensions in mm** | | | |

**(3): TO252**

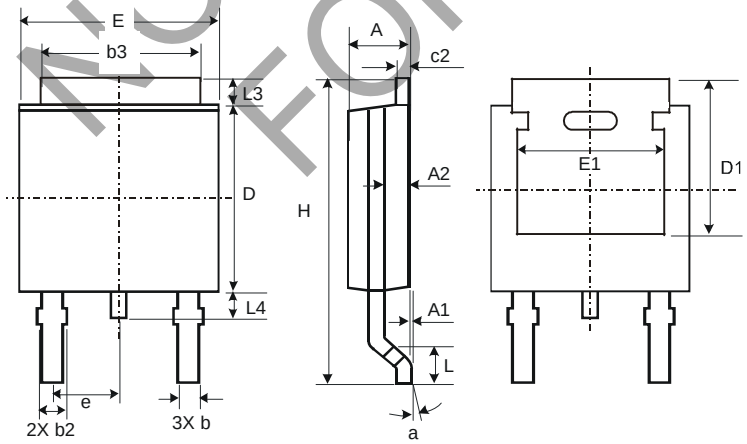


| TO252 | | | |
|---|---|---|---|
| **Dim** | **Min** | **Max** | **Typ** |
| **A** | 2.19 | 2.39 | 2.29 |
| **A1** | 0.00 | 0.13 | 0.08 |
| **A2** | 0.97 | 1.17 | 1.07 |
| **b** | 0.64 | 0.88 | 0.783 |
| **b2** | 0.76 | 1.14 | 0.95 |
| **b3** | 5.21 | 5.46 | 5.33 |
| **c2** | 0.45 | 0.58 | 0.531 |
| **D** | 6.00 | 6.20 | 6.10 |
| **D1** | 5.21 | – | – |
| **e** | – | – | 2.286 |
| **E** | 6.45 | 6.70 | 6.58 |
| **E1** | 4.32 | – | – |
| **H** | 9.40 | 10.41 | 9.91 |
| **L** | 1.40 | 1.78 | 1.59 |
| **L3** | 0.88 | 1.27 | 1.08 |
| **L4** | 0.64 | 1.02 | 0.83 |
| **a** | 0° | 10° | – |
| **All Dimensions in mm** | | | |

NOT RECOMMENDED FOR NEW DESIGN


© Diodes Incorporated

## Package Outline Dimensions (cont.) (All dimensions in mm.)

Please see http://www.diodes.com/package-outlines.html for the latest version.

**(4): SOT223 and SOT223R**

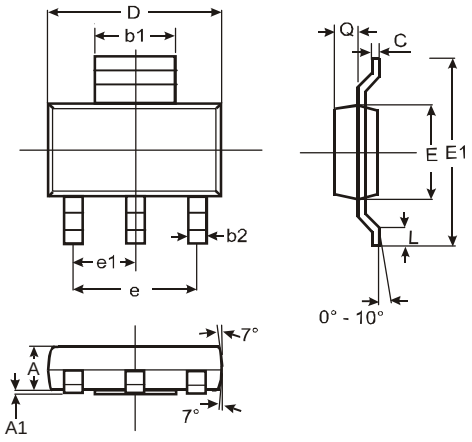


| SOT223 | | | |
|---|---|---|---|
| **Dim** | **Min** | **Max** | **Typ** |
| **A** | 1.55 | 1.65 | 1.60 |
| **A1** | 0.010 | 0.15 | 0.05 |
| **b1** | 2.90 | 3.10 | 3.00 |
| **b2** | 0.60 | 0.80 | 0.70 |
| **C** | 0.20 | 0.30 | 0.25 |
| **D** | 6.45 | 6.55 | 6.50 |
| **E** | 3.45 | 3.55 | 3.50 |
| **E1** | 6.90 | 7.10 | 7.00 |
| **e** | — | — | 4.60 |
| **e1** | — | — | 2.30 |
| **L** | 0.85 | 1.05 | 0.95 |
| **Q** | 0.84 | 0.94 | 0.89 |
| **All Dimensions in mm** | | | |

**(5): SO-8EP**

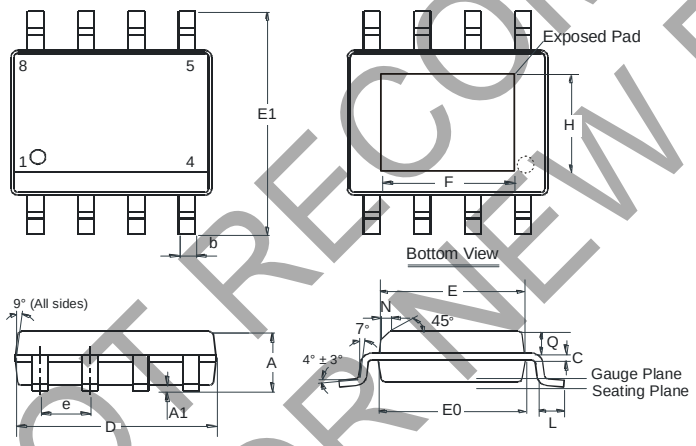


| SO-8EP (SOP-8L-EP) | | | |
|---|---|---|---|
| **Dim** | **Min** | **Max** | **Typ** |
| **A** | 1.40 | 1.50 | 1.45 |
| **A1** | 0.00 | 0.13 | - |
| **b** | 0.30 | 0.50 | 0.40 |
| **C** | 0.15 | 0.25 | 0.20 |
| **D** | 4.85 | 4.95 | 4.90 |
| **E** | 3.80 | 3.90 | 3.85 |
| **E0** | 3.85 | 3.95 | 3.90 |
| **E1** | 5.90 | 6.10 | 6.00 |
| **e** | - | - | 1.27 |
| **F** | 2.75 | 3.35 | 3.05 |
| **H** | 2.11 | 2.71 | 2.41 |
| **L** | 0.62 | 0.82 | 0.72 |
| **N** | - | - | 0.35 |
| **Q** | 0.60 | 0.70 | 0.65 |
| All Dimensions in mm | | | |

NOT RECOMMENDED FOR NEW DESIGN


© Diodes Incorporated

## Suggested Pad Layout

Please see http://www.diodes.com/package-outlines.html for the latest version.

**(1): U-DFN3030-8**

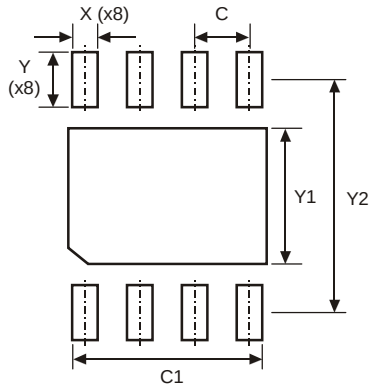


| Dimensions | Value (in mm) |
|---|---|
| C | 0.65 |
| C1 | 2.35 |
| X | 0.30 |
| Y | 0.65 |
| Y1 | 1.60 |
| Y2 | 2.75 |

**(2): SOT89-5**

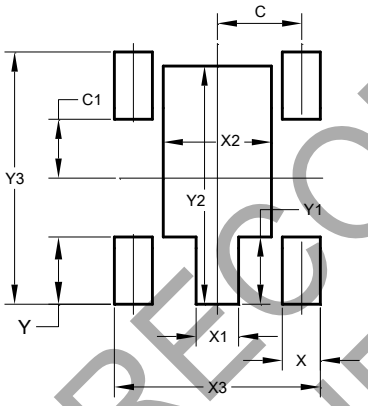


| Dimensions | Value (in mm) |
|---|---|
| C | 1.500 |
| C1 | 1.050 |
| X | 0.680 |
| X1 | 0.760 |
| X2 | 1.930 |
| X3 | 3.680 |
| Y | 1.200 |
| Y1 | 1.200 |
| Y2 | 4.250 |
| Y3 | 4.500 |

**(3): TO252**

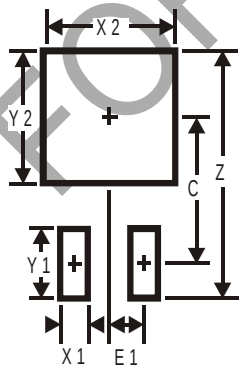


| Dimensions | Value (in mm) |
|---|---|
| Z | 11.6 |
| X1 | 1.5 |
| X2 | 7.0 |
| Y1 | 2.5 |
| Y2 | 7.0 |
| C | 6.9 |
| E1 | 2.3 |

NOT RECOMMENDED FOR NEW DESIGN


© Diodes Incorporated

## Suggested Pad Layout (cont.)

Please see http://www.diodes.com/package-outlines.html for the latest version.

**(4): SOT223 and SOT223R**

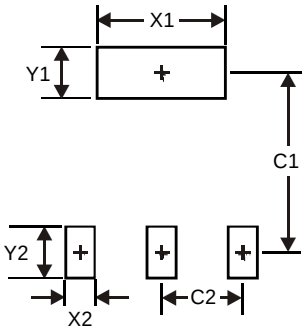


| Dimensions | Value (in mm) |
|---|---|
| X1 | 3.3 |
| X2 | 1.2 |
| Y1 | 1.6 |
| Y2 | 1.6 |
| C1 | 6.4 |
| C2 | 2.3 |

**(5): SO-8EP**

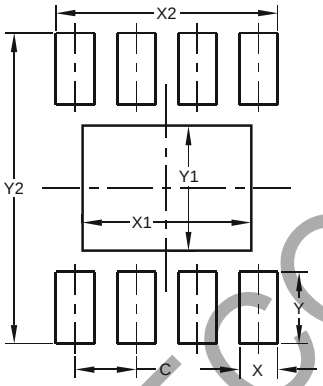


| Dimensions | Value(in mm) |
|---|---|
| C | 1.270 |
| X | 0.802 |
| X1 | 3.502 |
| X2 | 4.612 |
| Y | 1.505 |
| Y1 | 2.613 |
| Y2 | 6.500 |

NOT RECOMMENDED FOR NEW DESIGN


© Diodes Incorporated

**IMPORTANT NOTICE**

DIODES INCORPORATED MAKES NO WARRANTY OF ANY KIND, EXPRESS OR IMPLIED, WITH REGARDS TO THIS DOCUMENT, INCLUDING, BUT NOT LIMITED TO, THE IMPLIED WARRANTIES OF MERCHANTABILITY AND FITNESS FOR A PARTICULAR PURPOSE (AND THEIR EQUIVALENTS UNDER THE LAWS OF ANY JURISDICTION).

Diodes Incorporated and its subsidiaries reserve the right to make modifications, enhancements, improvements, corrections or other changes without further notice to this document and any product described herein. Diodes Incorporated does not assume any liability arising out of the application or use of this document or any product described herein; neither does Diodes Incorporated convey any license under its patent or trademark rights, nor the rights of others. Any Customer or user of this document or products described herein in such applications shall assume all risks of such use and will agree to hold Diodes Incorporated and all the companies whose products are represented on Diodes Incorporated website, harmless against all damages.

Diodes Incorporated does not warrant or accept any liability whatsoever in respect of any products purchased through unauthorized sales channel. Should Customers purchase or use Diodes Incorporated products for any unintended or unauthorized application, Customers shall indemnify and hold Diodes Incorporated and its representatives harmless against all claims, damages, expenses, and attorney fees arising out of, directly or indirectly, any claim of personal injury or death associated with such unintended or unauthorized application.

Products described herein may be covered by one or more United States, international or foreign patents pending. Product names and markings noted herein may also be covered by one or more United States, international or foreign trademarks.

This document is written in English but may be translated into multiple languages for reference. Only the English version of this document is the final and determinative format released by Diodes Incorporated.

**LIFE SUPPORT**

Diodes Incorporated products are specifically not authorized for use as critical components in life support devices or systems without the express written approval of the Chief Executive Officer of Diodes Incorporated. As used herein:

A. Life support devices or systems are devices or systems which:

1. are intended to implant into the body, or
2. support or sustain life and whose failure to perform when properly used in accordance with instructions for use provided in the labeling can be reasonably expected to result in significant injury to the user.

B. A critical component is any component in a life support device or system whose failure to perform can be reasonably expected to cause the failure of the life support device or to affect its safety or effectiveness.

Customers represent that they have all necessary expertise in the safety and regulatory ramifications of their life support devices or systems, and acknowledge and agree that they are solely responsible for all legal, regulatory and safety-related requirements concerning their products and any use of Diodes Incorporated products in such safety-critical, life support devices or systems, notwithstanding any devices- or systems-related information or support that may be provided by Diodes Incorporated. Further, Customers must fully indemnify Diodes Incorporated and its representatives against any damages arising out of the use of Diodes Incorporated products in such safety-critical, life support devices or systems.

Copyright © 2017, Diodes Incorporated

**www.diodes.com**

NOT RECOMMENDED FOR NEW DESIGN

ENTEGRECİ

Bu belge www.entegreci.com üzerinden sunulmaktadır.

# Elektronik komponent tedarikinde Entegreci

Entegreci, Eskişehir merkezli, Türkiye geneline satış yapan bir elektronik komponent mağazasıdır. Entegreler (IC), mikrodenetleyiciler, transistörler, diyotlar, pasif elemanlar, konnektörler, modüller ve geliştirme kartları tek adetten seri üretim adetlerine kadar satılır. Ürün sayfalarında güncel stok durumunu, fiyatı ve datasheet bağlantısını bulabilirsiniz.

### Parça koduyla arama

Üretici parça numarasını yazın; stok ve fiyatı hemen görün.

**www.entegreci.com**

### Ürün kategorileri

Entegreden kapasitöre tüm elektronik komponent kategorileri.

**Kategorilere göz atın**

### Üreticiler

Aradığınız üreticinin ürünlerini tek sayfada inceleyin.

**Üreticileri görün**

### Toplu alım ve teklif

Listede olmayan ya da yüksek adetli parçalar için teklif isteyin.

**Teklif isteyin**

**www.entegreci.com** | **destek@entegreci.com** | **0850 305 90 34**

Entegreci is an online electronic components store based in Türkiye. Search by manufacturer part number to see stock, prices and datasheets for integrated circuits, microcontrollers, transistors, passive components and connectors, or request a quote for parts that are not listed.

Bu sayfa Entegreci tarafından eklenmiştir. Belgenin önceki sayfaları asıl yayıncısına aittir ve içeriği değiştirilmemiştir; en güncel sürüm için belgenin yayıncısına başvurun.