1A LOW DROPOUT ADJUSTABLE AND FIXED-MODE REGULATOR WITH ENABLE

Description

The AP7361C is a 1A, adjustable and fixed output voltage, ultra-low dropout linear regulator with enable. The device includes pass element, error amplifier, band-gap reference, current limit and thermal shutdown circuitry. The device is turned on when EN pin is set to logic high level.

The characteristics of the low dropout voltage and low quiescent current make it suitable for low-to-medium power applications; for example, laptop computers, audio and video applications, and battery-powered devices. The typical quiescent current is approximately 60µA. Built-in current-limit and thermal-shutdown functions prevent IC from damage in fault conditions.

The AP7361C is available in U-DFN3030-8 (Type E), SOT89-5, SOT223, TO252 (DPAK) and SO-8EP packages.

Features

- Wide Input Voltage Range: 2.2V to 6.0V
- Output Voltage Accuracy: ±1%
- Very Low Dropout Voltage (3.3V): 360mV at 1A Typical
- Low Quiescent Current (I_Q): 60µA Typical
- Adjustable Output Voltage Range: 0.8V to 5.0V
- Fixed Output Options: 1.0V, 1.2V, 1.5V, 1.8V, 2.5V, 2.8V and 3.3V
- High PSRR: 75dB @ 1kHz
- Current Limit: 1.5A
- Fold-Back Short Circuit Protection: 400mA
- Thermal Shutdown Protection
- Stable with MLCC, E-Cap, Tan-Cap or Solid Capacitor ≥ 2.2µF
- Ambient Temperature Range: -40°C to +85°C
- Available in "Green" Molding Compound (No Br, Sb)
- Moisture Sensitivity: Level 1 Per J-STD-020
- Terminals:
  - SOT89-5/ SOT223/ SO-8EP/ TO252:
    Finish - Matte Tin Plated Leads, Solderable per MIL-STD-202, Method 208 e3
  - U-DFN3030-8:
    Finish - NiPdAu over Copper Leads, Solderable per MIL-STD-202, Method 208 e4
- Weight:
  - U-DFN3030-8: 0.017 grams (Approximate)
  - SOT89-5: 0.059 grams (Approximate)
  - SOT223: 0.113 grams (Approximate)
  - SO-8EP: 0.081 grams (Approximate)
  - TO252: 0.33 grams (Approximate)
- **Diodes automotive grade parts (Q-suffix) are suitable for automotive applications requiring specific change control; these parts are AEC-Q100/101/200 qualified, PPAP capable, and manufactured in IATF16949:2016 certified facilities. https://www.diodes.com/quality/product-definitions/**
- **Totally Lead-Free & Fully RoHS Compliant (Notes 1 & 2)**
- **Halogen- and Antimony-Free. "Green" Device (Note 3)**

Pin Assignments

(Top View)

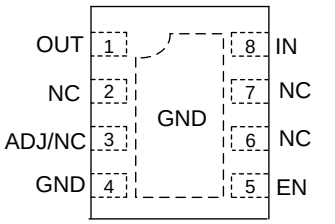

U-DFN3030-8 (Type E)

(Top View)

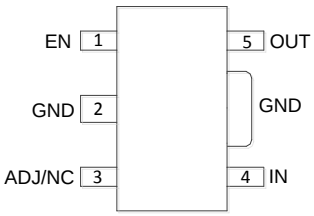

SOT89-5

(Top View)

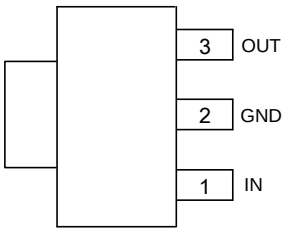

SOT223

(Top View)

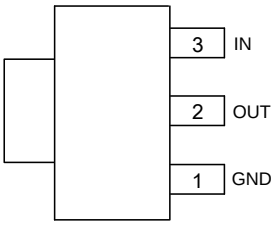

SOT223R

(Top View)

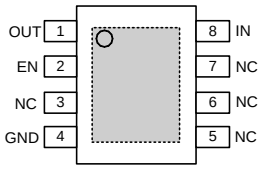

SO-8EP

(Top View)

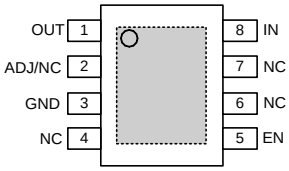

SO-8EPR

(Top View)

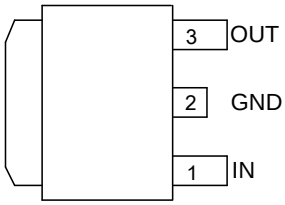

TO252 (DPAK)

(Top View)

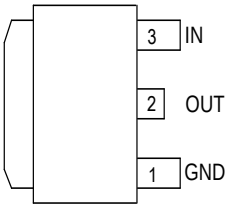

TO252 (DPAK) R

Applications

- LCD-TV, Monitor
- Set-Top-Box
- Home Electrical Appliances

Notes:
1. No purposely added lead. Fully EU Directive 2002/95/EC (RoHS), 2011/65/EU (RoHS 2) & 2015/863/EU (RoHS 3) compliant.
2. See https://www.diodes.com/quality/lead-free/ for more information about Diodes Incorporated's definitions of Halogen- and Antimony-free, "Green" and Lead-free.
3. Halogen- and Antimony-free "Green" products are defined as those which contain <900ppm bromine, <900ppm chlorine (<1500ppm total Br + Cl) and <1000ppm antimony compounds.

© Diodes Incorporated

Typical Applications Circuit

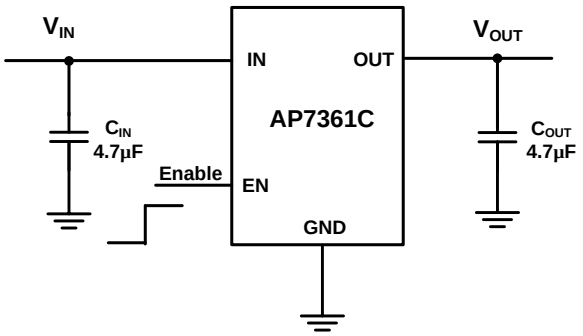

Fixed Version with EN

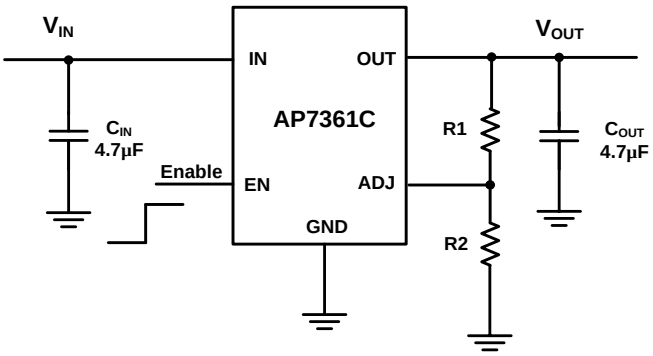

Adjustable Output

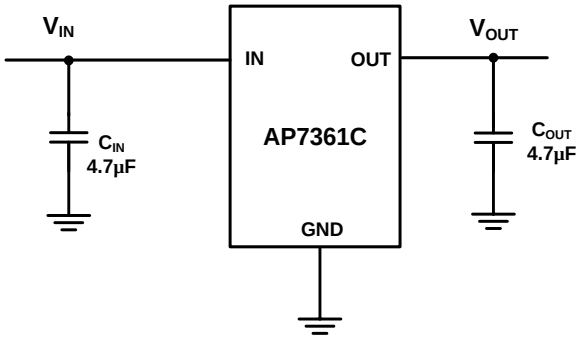

Fixed Version without EN

Pin Descriptions

Pin Number								Pin Name	Function
U-DFN3030-8 (Type E)	SOT89-5	TO252 (DPAK)	TO252 (DPAK)R	SOT223	SOT223R	SO-8EP	SO-8EPR		
8	4	1	3	1	3	8	8	IN	The input of the regulator. Bypass to ground through at least 1µF ceramic capacitor.
1	5	3	2	3	2	1	1	OUT	The output of the regulator. Bypass to ground through at least 2.2µF ceramic capacitor. For improved ac load response a larger capacitor is recommended.
4	2	2	1	2	1	4	3	GND	Ground
3	3	–	–	–	–	–	2	ADJ/NC	Adjustable voltage version only – a resistor divider from this pin to the OUT pin and ground sets the output voltage.
5	1	–	–	–	–	2	5	EN	Enable input, active high
2, 6, 7	–	–	–	–	–	3, 5, 6, 7	4, 6, 7	NC	No connection

© Diodes Incorporated

Functional Block Diagram

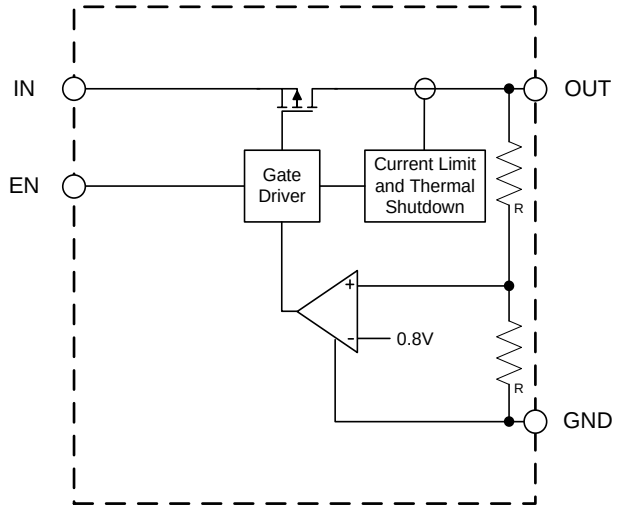

Fixed Version with EN

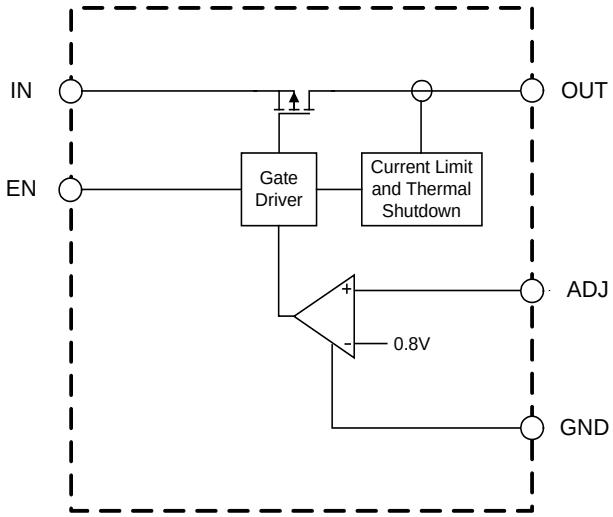

Adjustable Version

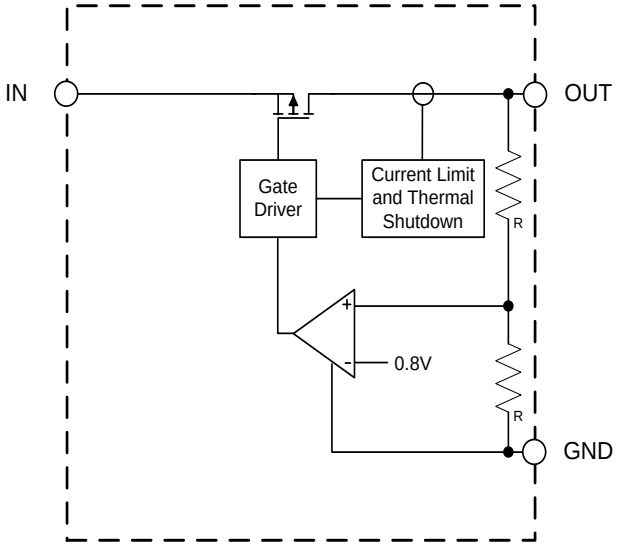

Fixed Version without EN

© Diodes Incorporated

Absolute Maximum Ratings (@ T_A = +25°C, unless otherwise specified.) (Note 4)

Symbol	Parameter		Rating	Unit
V_{IN}	Input Voltage		6.5	V
–	OUT, ADJ, EN Voltage		V_{IN} +0.3	V
T_J	Operating Junction Temperature Range		-40 to +150	°C
T_{STG}	Storage Temperature Range		-65 to +150	°C
P_D	Power Dissipation		Internally limited by maximum junction temperature of +150°C	–
P_D	Power Dissipation	U-DFN3030-8 (Type E)	1700	mW
		TO252 (DPAK)	1250	
		SOT223	1100	
		SOT89-5	800	
		SO-8EP	1190	
ESD HBM	Human Body Model ESD Protection		> 2	KV
ESD MM	Machine Model ESD Protection (Note 5)		> 200	V

Notes: 4. Stresses greater than the 'Absolute Maximum Ratings' specified above may cause permanent damage to the device. These are stress ratings only; functional operation of the device at these or any other conditions exceeding those indicated in this specification is not implied. Device reliability may be affected by exposure to absolute maximum rating conditions for extended periods of time.
5. ESD MM rating at 150V for EN pin in SOT89-5 package.

Recommended Operating Conditions (@ T_A = +25°C, unless otherwise specified.)

Symbol	Parameter	Min	Max	Unit
V_{IN}	Input Voltage	2.2	6.0	V
V_{OUT}	Output Voltage	0.8	5.0	V
I_{OUT}	Output Current (Note 6)	0	1.0	A
T_A	Operating Ambient Temperature	-40	+85	°C

Notes: 6. The device maintains a stable, regulated output voltage without a load current. When the output current is large, attention should be given to the limitation of the package power dissipation.

© Diodes Incorporated

Electrical Characteristics (@ T_A = +25°C, V_{IN} = V_{OUT} +1V, C_{IN} = 4.7μF, C_{OUT} = 4.7μF, V_{EN} = V_{IN}, unless otherwise specified.)

Symbol	Parameter	Test Conditions		Min	Typ	Max	Unit
V_{REF}	FB Reference Voltage, ADJ pin	I_{OUT} = 10mA, T_A = +25°C		0.792	0.8	0.808	V
I_{ADJ}	ADJ Pin Leakage Current	–		–	0.1	0.5	μA
I_Q	Input Quiescent Current	Enabled, I_{OUT} = 0A		–	60	80	μA
I_{SHDN}	Input Shutdown Current	V_{EN} = 0V, I_{OUT} = 0A		-1	0.05	1	μA
V_{OUT}	Output Voltage Accuracy	I_{OUT} = 100mA, T_A = +25°C	1.0V≤V_{OUT}<1.5V	V_{OUT}(s)-0.015	V_{OUT}(s)	V_{OUT}(s)+0.015	V
			1.5 V≤V_{OUT}≤3.3V	V_{OUT}(s)*0.99	V_{OUT}(s)	V_{OUT}(s)*1.01	
$\frac{\Delta V_{OUT}}{\Delta V_{IN} \times V_{OUT}}$	Line Regulation	V_{IN} = V_{OUT} +1V to 5.5V, I_{OUT} = 100mA	T_A = +25°C	–	0.01	0.1	%/V
			-40°C ≤T_A ≤ +85°C	–	–	0.2	
ΔV_{OUT} / V_{OUT}	Load Regulation	I_{OUT} from 1.0mA to 1A	1.2V<V_{OUT}≤ 3.3V	-1.0	–	1.0	%
			1.0V≤V_{OUT} ≤1.2V	-1.5	–	1.5	%
$V_{DROPOUT}$	Dropout Voltage (Note 7)	I_{OUT} = 300mA	1.0V≤V_{OUT}<1.1V	–	710	750	mV
			1.1V≤V_{OUT}<1.2V	–	600	640	
			1.2V≤V_{OUT}<1.3V	–	500	540	
			1.3V≤V_{OUT}<1.4V	–	400	440	
			1.4V≤V_{OUT}<1.5V	–	300	340	
			1.5V≤V_{OUT}<2.6V	–	200	250	
			2.6V≤V_{OUT}≤3.3V	–	90	140	
		I_{OUT} = 1A	1.0V≤V_{OUT}<1.1V	–	840	–	
			1.1V≤V_{OUT}<1.2V	–	780	–	
			1.2V≤V_{OUT}<1.3V	–	710	–	
			1.3V≤V_{OUT}<1.4V	–	660	–	
			1.4V≤V_{OUT}<1.5V	–	610	–	
			1.5V≤V_{OUT}<2.0V	–	570	–	
			2.0V≤V_{OUT}<2.6V	–	440	–	
			2.6V≤V_{OUT}≤3.3V	–	340	–	
V_{IL}	EN Input Logic Low Voltage	–		0	–	0.3	V
V_{IH}	EN Input Logic High Voltage	–		1.0	–	V_{IN}	V
R_{ENPD}	EN Pull-Down Resistor	–		–	3.0	–	MΩ
I_{EN}	EN Input Leakage Current	V_{IN} = 5.5V, V_{EN} = 0V		-0.1	–	0.1	μA
R_{PD}	Output Discharge Resistor	V_{OL}=1V		–	100	–	Ω
I_{OUT}	Maximum Output Current	V_{IN} = V_{OUT} +1V		1.0	–	–	A
I_{LIMIT}	Current Limit	V_{IN} = V_{OUT} +1V($V_{IN\ MINI}$=2.2V)		1.1	1.5	–	A
I_{SHORT}	Short-Circuit Current	V_{IN} = V_{OUT} +1V, Output Voltage < 15% V_{OUT}		–	400	–	mA
PSRR	Power Supply Rejection Ratio (Note 8)	f = 1kHz, I_{OUT} = 100mA		–	75	–	dB
		f = 10kHz, I_{OUT} = 100mA		–	55	–	
t_{ST}	Start-Up Time	V_{OUT} = 3V, C_{OUT} = 2.2μF, R_L = 30Ω		–	150	–	μs
$\frac{\Delta V_{OUT}}{\Delta T_A \times V_{OUT}}$	Output Voltage Temperature Coefficient	I_{OUT} = 100mA, -40°C ≤ T_A ≤ +85°C		–	±100	–	ppm/°C
T_{SHDN}	Thermal Shutdown Threshold	–		–	150	–	°C
T_{HYS}	Thermal Shutdown Hysteresis	–		–	20	–	°C

Notes: 7. Dropout voltage is the voltage difference between the input and the output at which the output voltage drops 2% below its nominal value. This parameter only applies to output voltages above 1.2V since minimum V_{IN} = 2.2V.
8. For V_{IN} ≥ 2.5V and V_{IN} = V_{OUT} +1V. For V_{IN} < 2.5V, the PSRR performance may be reduced.

© Diodes Incorporated

Electrical Characteristics (@ T_A = +25°C, V_{IN} = V_{OUT} +1V, C_{IN} = 4.7µF, C_{OUT} = 4.7µF, V_{EN} = V_{IN}, unless otherwise specified.) (Cont.)

Symbol	Parameter	Test Conditions	Min	Typ	Max	Unit
θ_{JA}	Thermal Resistance Junction-to-Ambient	U-DFN3030-8 (Type E) (Note 9)	–	70	–	°C/W
		TO252 (DPAK) (Note 9)	–	95	–	
		SOT223 (Note 9)	–	110	–	
		SOT89-5 (Note 9)	–	150	–	
		SO-8EP (Note 9)	–	100	–	

Notes: 9. Test condition: U-DFN3030-8 (Type E), SO-8EP devices are mounted on 2"x2", FR-4 substrate PCB, with minimum recommended pad on top layer and thermal vias to bottom layer ground plane. TO252(DPAK) devices are mounted on 2"x2" FR-4 substrate PC board, 2oz copper, with minimum recommended pad layout. For SOT223, the device is mounted on FR-4 substrate PC board, with minimum recommended pad layout. SOT89-5 devices are mounted on 1"x1" FR-4 substrate PC board, with minimum recommended pad layout.

Performance Characteristics

Start-up Time

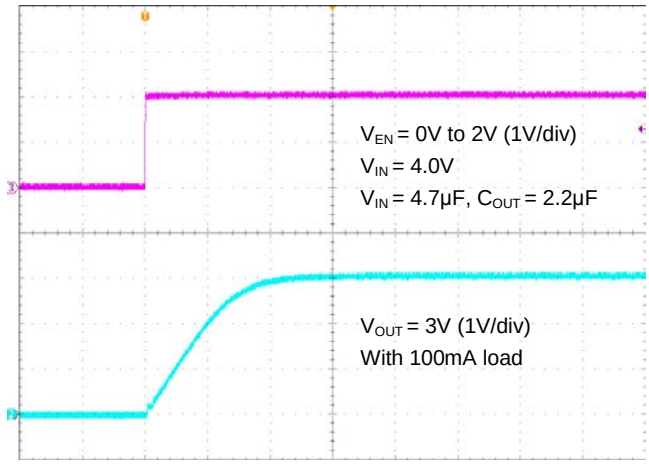

Time (100µs/div)

Start-up Time

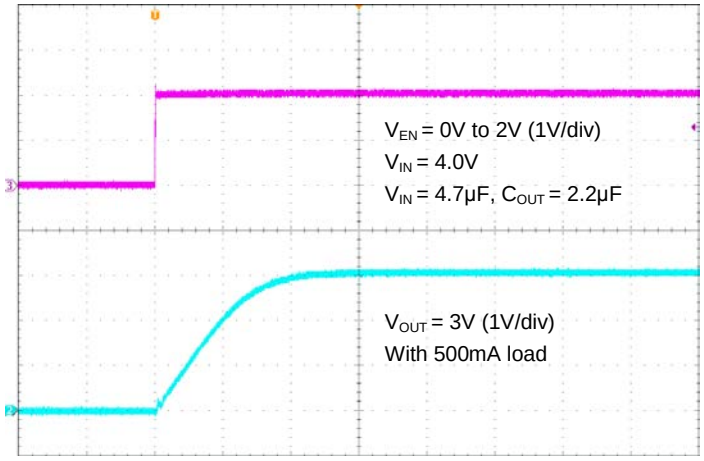

Time (100µs/div)

Line Transient Response

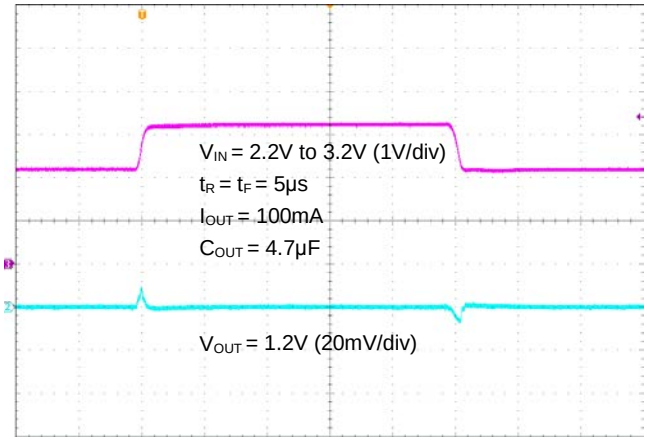

Time (40µs/div)

Line Transient Response

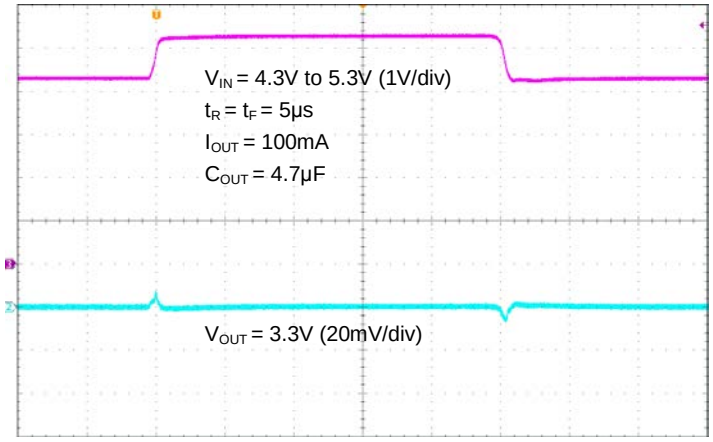

Time (40µs/div)

© Diodes Incorporated

Performance Characteristics (Cont.)

Load Transient Response

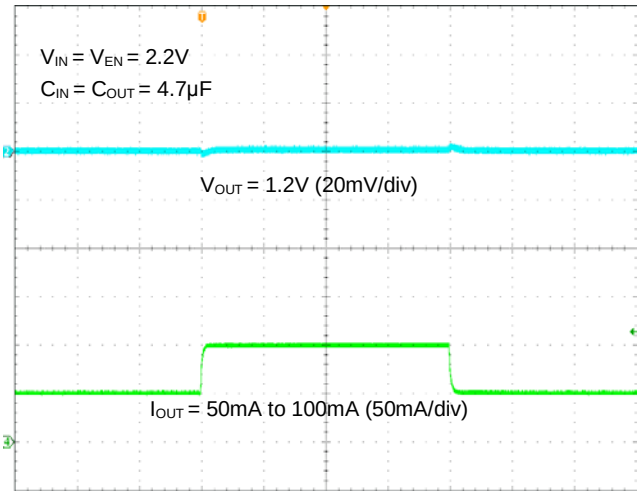

Load Transient Response

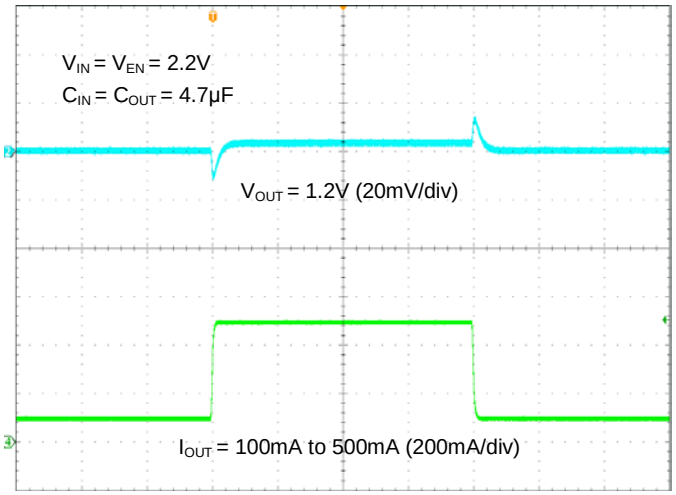

Load Transient Response

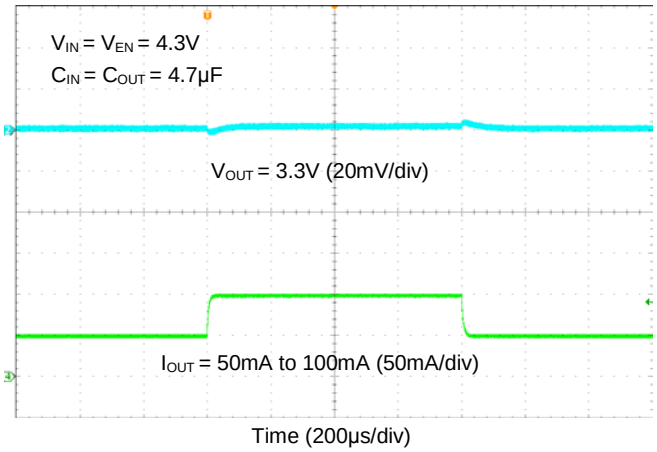

Load Transient Response

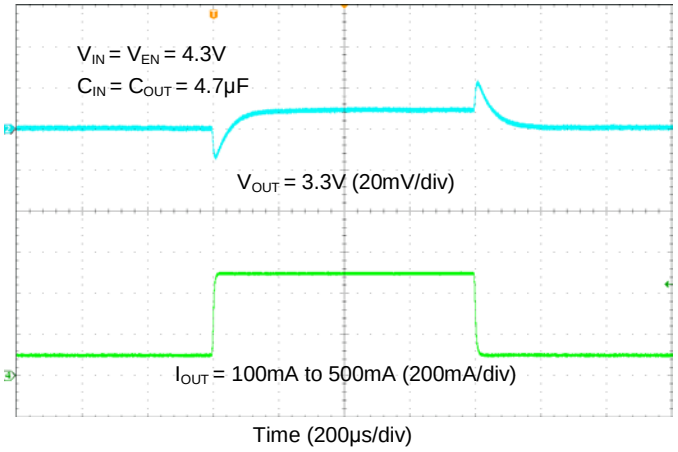

Load Transient Response

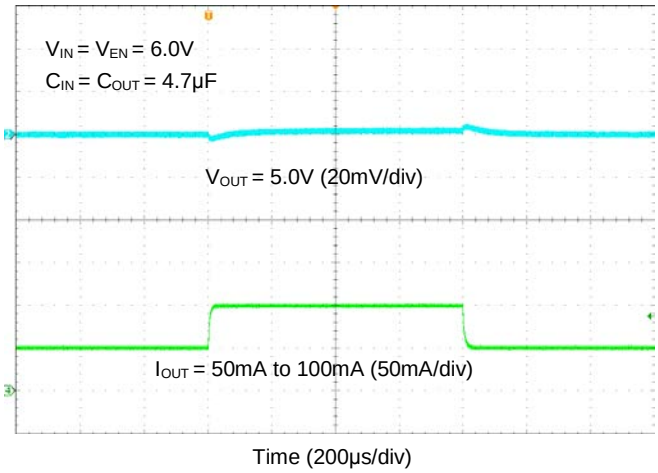

Load Transient Response

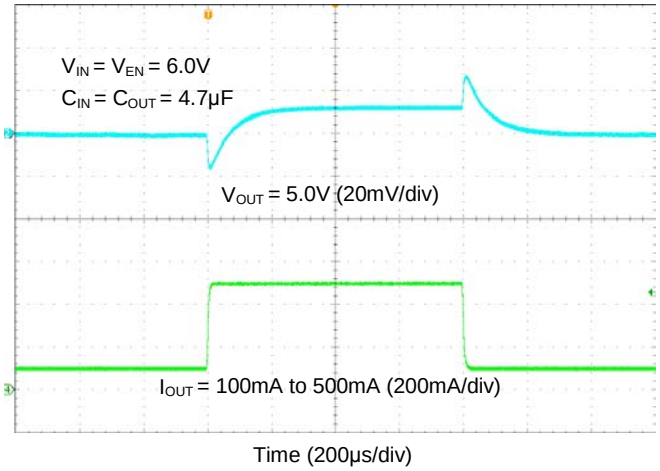

© Diodes Incorporated

Performance Characteristics (Cont.)

FB Reference Voltage vs Temperature

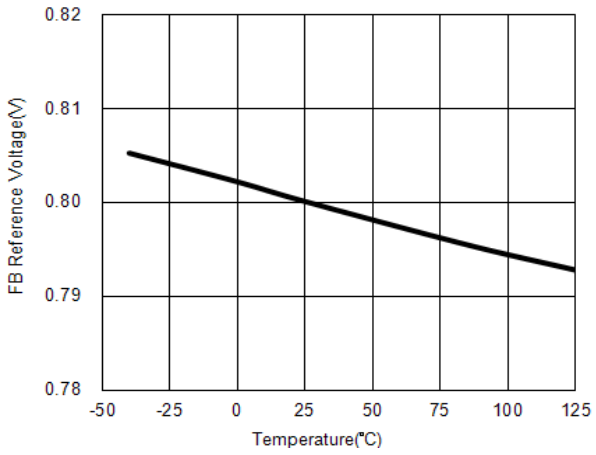

Dropout Voltage vs Output Current

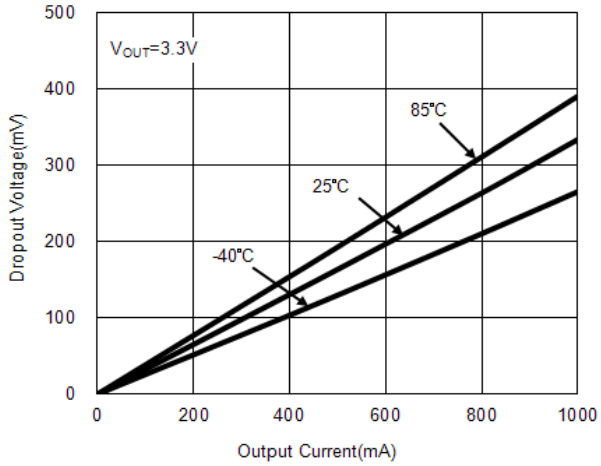

Current Limit vs Input Voltage

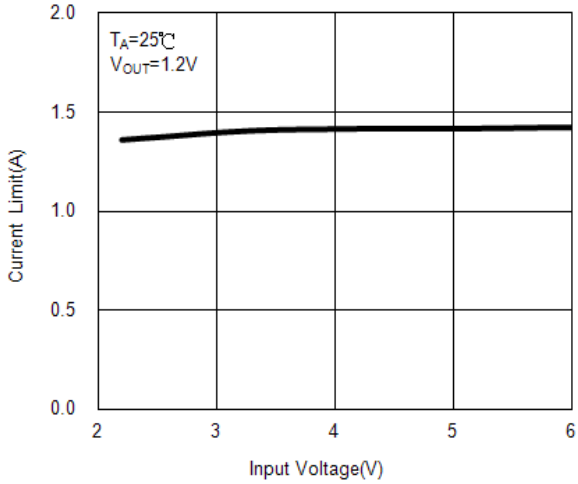

Current Limit vs Temperature

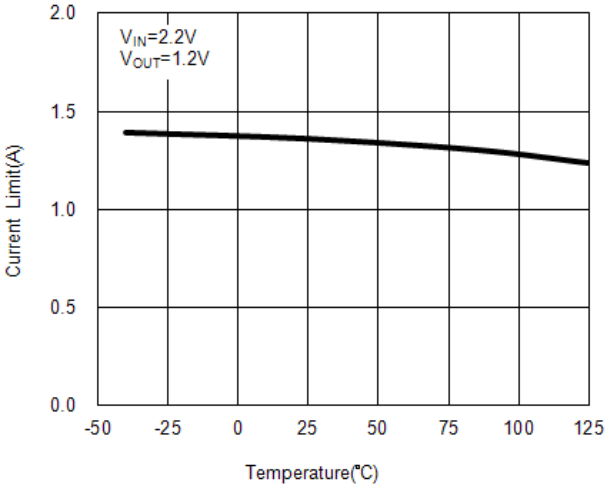

Current Limit vs Temperature

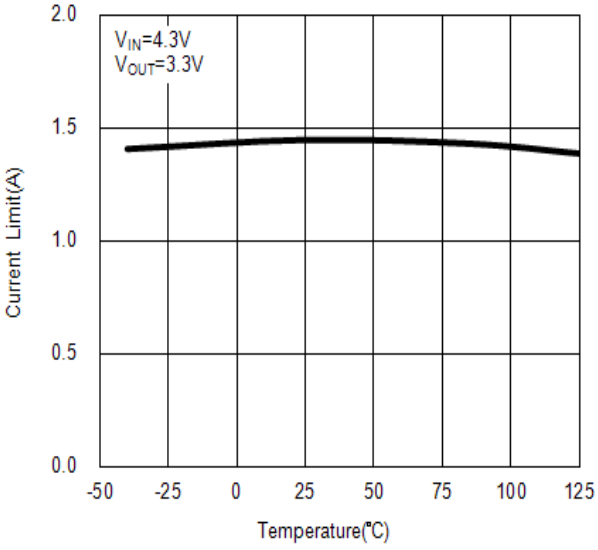

Short-circuit Current vs Temperature

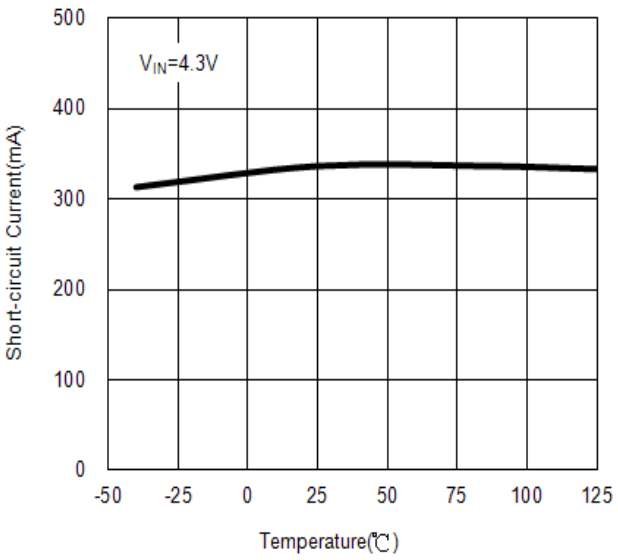

© Diodes Incorporated

Performance Characteristics (Cont.)

Load Regulation

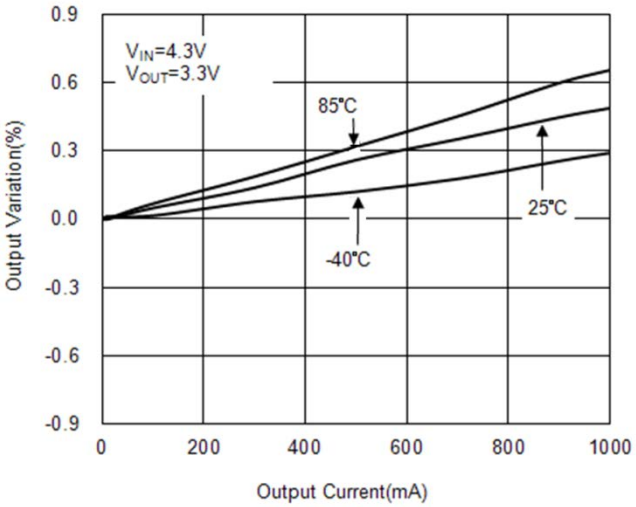

Line Regulation

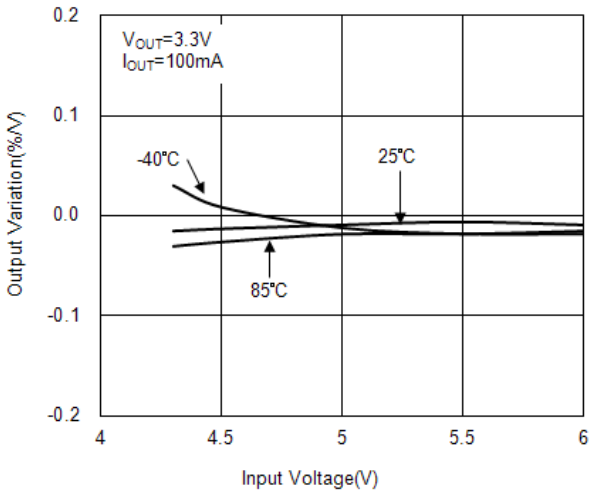

Input Quiescent Current vs Input Voltage

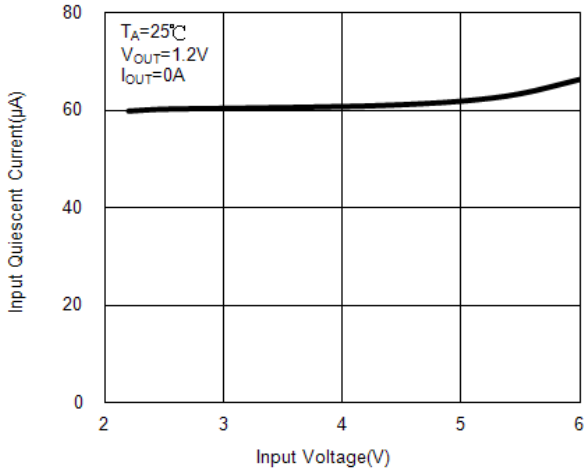

Input Quiescent Current vs Temperature

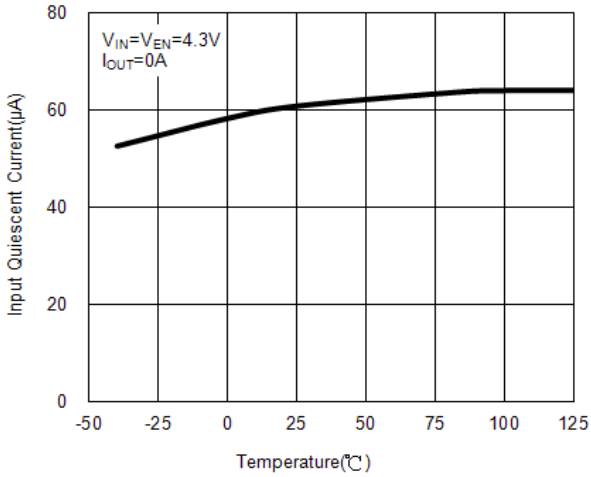

© Diodes Incorporated

Performance Characteristics (Cont.)

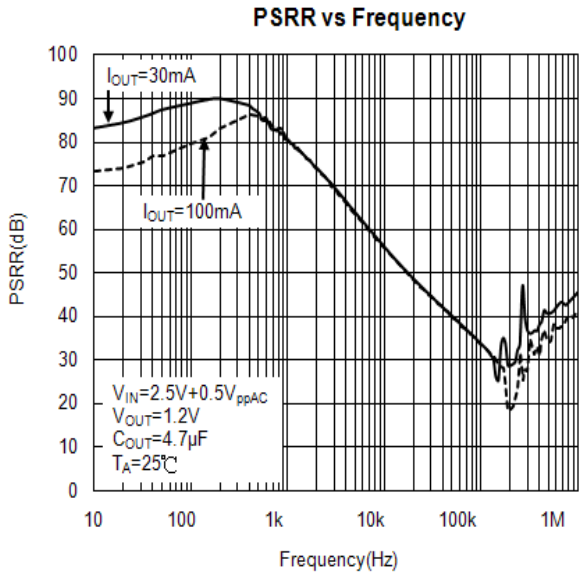

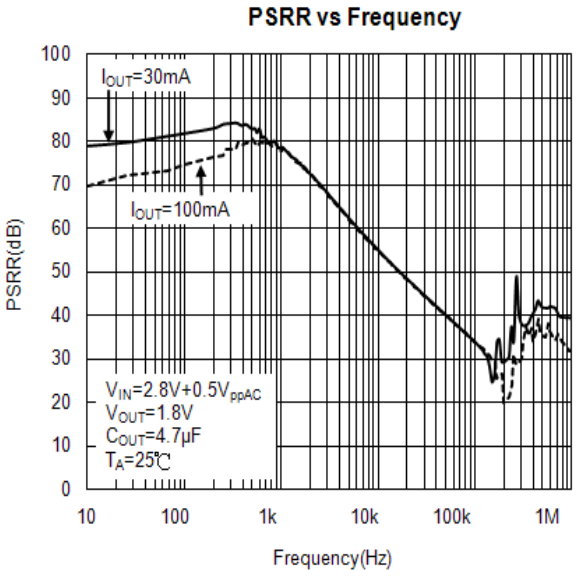

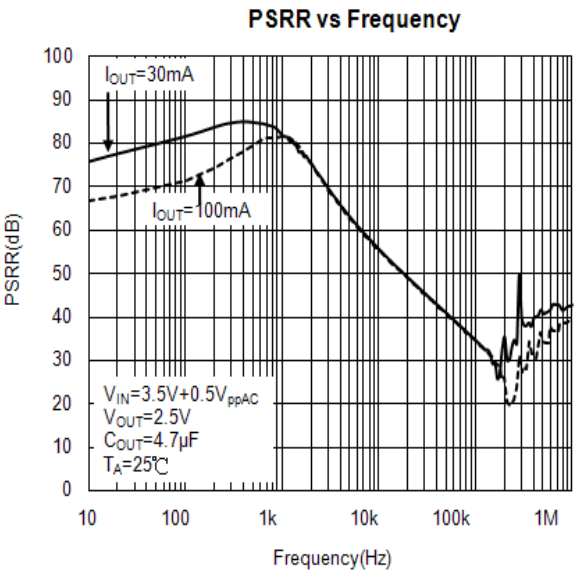

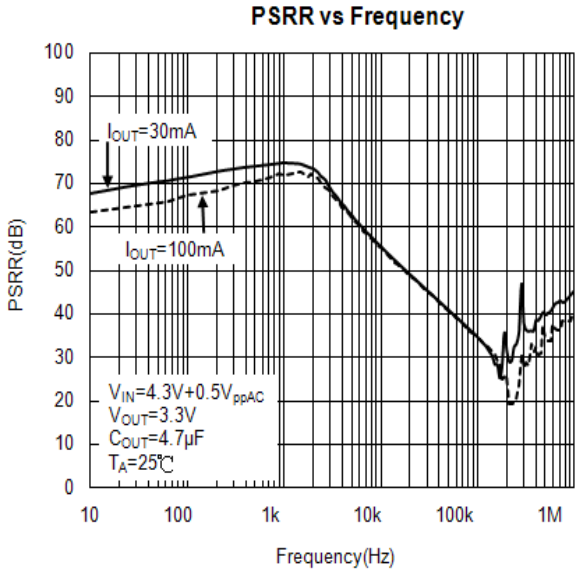

Application Information

Input Capacitor

A 1μF ceramic capacitor is recommended between the IN and GND pins to decouple input power supply glitch and noise. The amount of the capacitance may be increased without limit. This input capacitor must be located as close as possible to the device to assure input stability and reduce noise. For PCB layout, a wide copper trace is required for both IN and GND pins. A lower ESR capacitor type allows the use of less capacitance, while higher ESR type requires more capacitance.

Output Capacitor

The output capacitor is required to stabilize and improve the transient response of the LDO. The AP7361C is stable with very small ceramic output capacitors. Using a ceramic capacitor value that is at least 2.2μF on the output ensures stability. Higher capacitance values help to improve line and load transient response. The output capacitance may be increased to keep low undershoot and overshoot. Output capacitor must be placed as close as possible to OUT and GND pins.

© Diodes Incorporated

Application Information (Cont.)

Adjustable Operation

The AP7361C provides output voltage from 0.8V to 5.0V through external resistor divider as shown below.

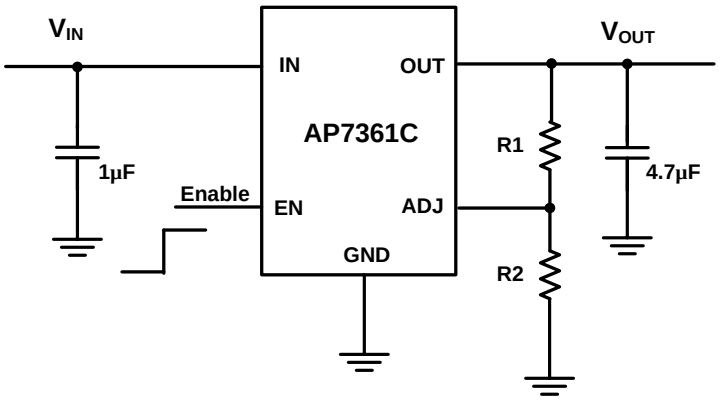

Adjustable Output

The output voltage is calculated by:

$$V_{OUT} = V_{REF}\left(1+\frac{R_1}{R_2}\right)$$

Where V_{REF} = 0.8V (the internal reference voltage)

Rearranging the equation will give the following that is used for adjusting the output to a particular voltage:

$$R1 = R2\left(\frac{V_{OUT}}{V_{REF}}-1\right)$$

To maintain the stability of the internal reference voltage, R2 needs to be kept smaller than 80kΩ.

No Load Stability

Other than external resistor divider, no minimum load is required to keep the device stable. The device will remain stable and regulated in no load condition.

ON/OFF Input Operation

The ON/OFF feature is not available in the SOT223 and TO252 (DPAK) packages.

The AP7361C is turned on by setting the EN pin high, and is turned off by pulling it low. If this feature is not used, the EN pin should be tied to IN pin to keep the regulator output on at all time. To ensure proper operation, the signal source used to drive the EN pin must be able to swing above and below the specified turn-on/off voltage thresholds listed in the Electrical Characteristics section under V_{IL} and V_{IH}.

Current Limit Protection

When output current at OUT pin is higher than current limit threshold, the current limit protection will be triggered and clamp the output current to prevent over-current and to protect the regulator from damage due to overheating.

Short Circuit Protection

When OUT pin is short-circuit to GND, short circuit protection will be triggered and clamp the output current to approximately 400mA. Full current is restored when the output voltage exceeds 15% of V_{OUT}. This feature protects the regulator from over-current and damage due to overheating.

© Diodes Incorporated

Application Information (Cont.)

Thermal Shutdown Protection

Thermal protection disables the output when the junction temperature rises to approximately +150°C, allowing the device to cool down. When the junction temperature reduces to approximately +130°C the output circuitry is enabled again. Depending on power dissipation, thermal resistance, and ambient temperature, the thermal protection circuit may cycle on and off. This cycling limits the heat dissipation of the regulator, protecting it from damage due to overheating.

Ultra Fast Start-up

After enabled, the AP7361C is able to provide full power in as little as tens of microseconds, typically 200µs, without sacrificing low ground current. This feature will help load circuitry move in and out of standby mode in real time, eventually extend battery life for mobile phones and other portable devices.

Low Quiescent Current

The AP7361C, consuming only around 60µA for all input range, provides great power saving in portable and low power applications.

Power Dissipation

The device power dissipation and proper sizing of the thermal plane that is connected to the thermal pad is critical to avoid thermal shutdown and ensure reliable operation. Power dissipation of the device depends on input voltage and load conditions and can be calculated by:

$$P_D = (V_{IN} - V_{OUT}) \times I_{OUT}$$

The maximum power dissipation, handled by the device, depends on the maximum junction to ambient thermal resistance, maximum ambient temperature, and maximum device junction temperature, which can be calculated by the equation in the following:

$$P_D(max@T_A) = \frac{(+150°C - T_A)}{R_{\theta JA}}$$

ESR vs. Output Current

Ceramic type output capacitor is recommended for this series; however, the other output capacitors with low ESR also can be used. The relations between I_{OUT} (Output Current) and ESR of an output capacitor are shown below. The stable region for the safety operating temperature (-40°C ~ +85°C) is marked as the gray area in the graph.

Measurement conditions: Frequency Band: 10Hz to 2MHz, Temperature: -40°C to +85°C.

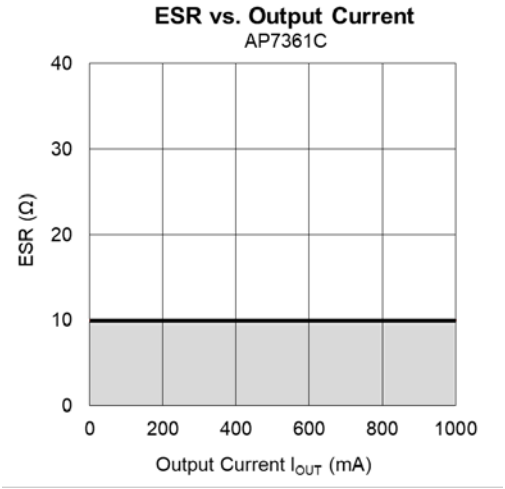

© Diodes Incorporated

Ordering Information

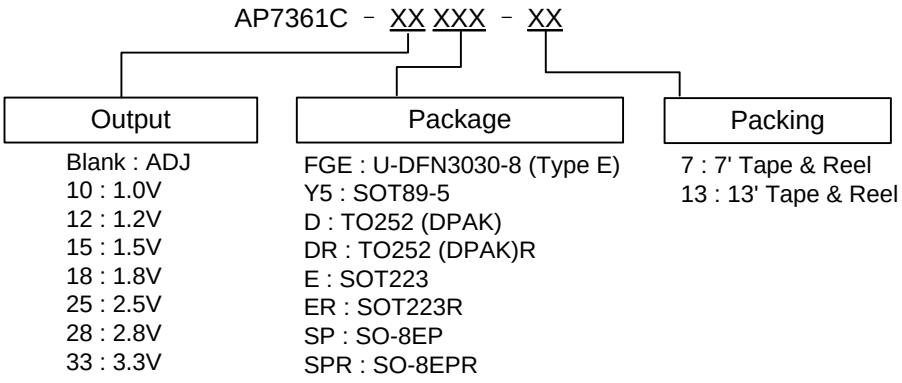

Part Number	Package Code	Packaging	7"/13" Tape and Reel	
			Quantity	Part Number Suffix
AP7361C-XXFGE-7	FGE	U-DFN3030-8 (Type E)	3000/Tape & Reel	-7
AP7361C-XXY5-13	Y5	SOT89-5	2500/Tape & Reel	-13
AP7361C-XXD-13	D	TO252 (DPAK)	2500/Tape & Reel	-13
AP7361C-XXDR-13	DR	TO252 (DPAK)R	2500/Tape & Real	-13
AP7361C-XXE-13	E	SOT223	2500/Tape & Reel	-13
AP7361C-XXER-13	ER	SOT223R	2500/Tape & Reel	-13
AP7361C-XXSP-13	SP	SO-8EP	2500/Tape & Reel	-13
AP7361C-XXSPR-13	SPR	SO-8EPR	2500/Tape & Reel	-13

© Diodes Incorporated

Marking Information

(1) U-DFN3030-8 (Type E)

(Top View)

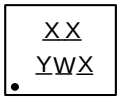

XX : Identification Code
Y : Year : 0~9
W : Week : A~Z : 1~26 week;
a~z : 27~52 week; z represents
52 and 53 week
X : Internal Code

Device	Package	Identification Code
AP7361C-ADJ	U-DFN3030-8 (Type E)	SH
AP7361C-10	U-DFN3030-8 (Type E)	SJ
AP7361C-12	U-DFN3030-8 (Type E)	SK
AP7361C-15	U-DFN3030-8 (Type E)	SV
AP7361C-18	U-DFN3030-8 (Type E)	SW
AP7361C-25	U-DFN3030-8 (Type E)	SX
AP7361C-28	U-DFN3030-8 (Type E)	SY
AP7361C-33	U-DFN3030-8 (Type E)	SZ

(2) SOT89-5

(Top View)

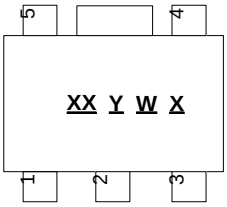

XX : Identification Code
Y : Year : 0~9
W : Week : A~Z : 1~26 week;
a~z : 27~52 week;
z represents 52 and 53 week
X : Internal Code

Device	Package	Identification Code
AP7361C-ADJ	SOT89-5	KR
AP7361C-10	SOT89-5	KS
AP7361C-12	SOT89-5	KT
AP7361C-15	SOT89-5	KU
AP7361C-18	SOT89-5	KV
AP7361C-25	SOT89-5	KW
AP7361C-28	SOT89-5	KX
AP7361C-33	SOT89-5	KZ

© Diodes Incorporated

Marking Information (Cont.)

(3) TO252 (DPAK)

Pin 1: IN, Pin 2: GND, Pin 3: OUT

(Top View)

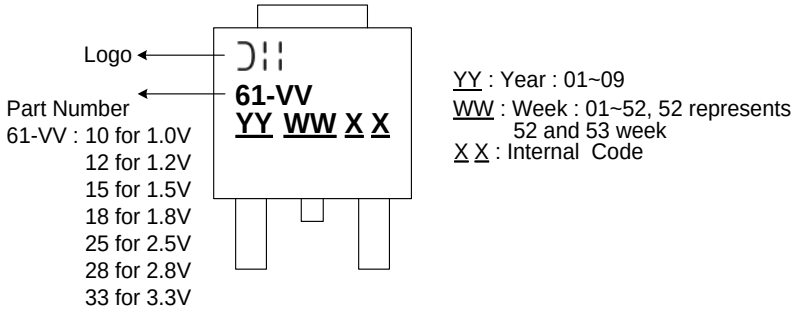

(4) SOT223

Pin 1: IN, Pin 2: GND, Pin 3: OUT

(Top View)

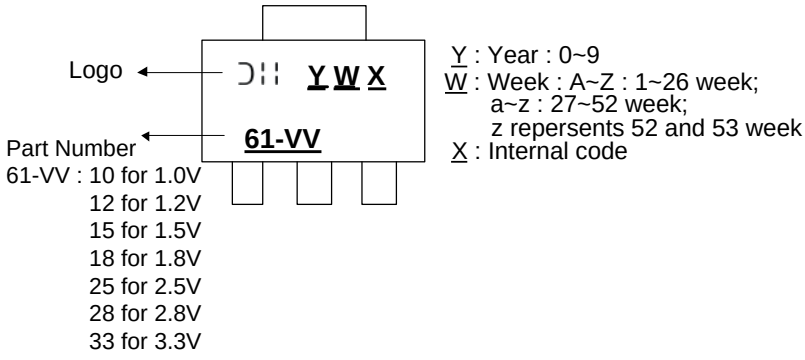

(5) SOT223R

Pin 1: GND, Pin 2: OUT, Pin 3: IN

(Top View)

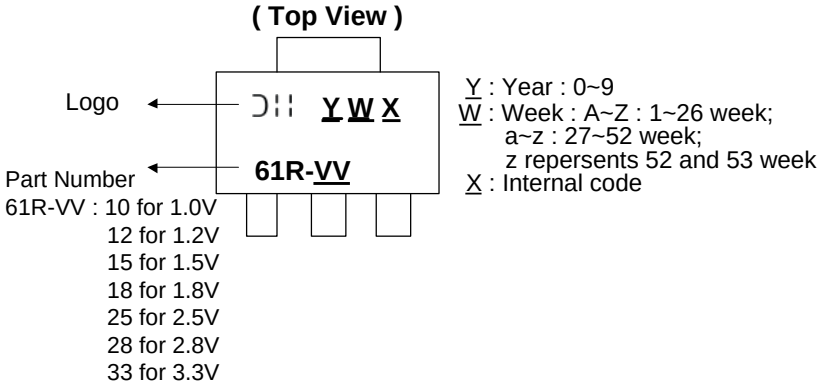

© Diodes Incorporated

Marking Information (Cont.)

(6) TO252 (DPAK)R

Pin 1: GND, Pin 2: OUT, Pin 3: IN

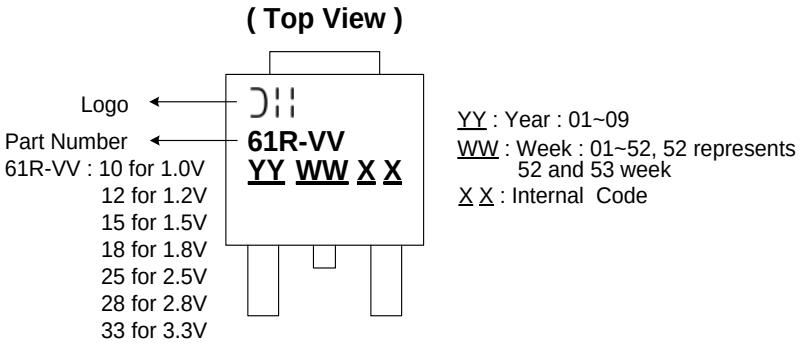

(7) SO-8EP

Pin 1: OUT, Pin 2: EN, Pins 3, 5, 6 and 7: NC, Pin 4: GND, Pin 8: IN

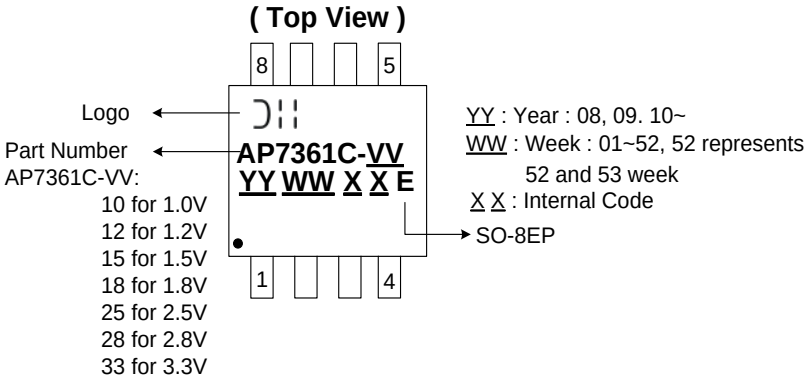

(8) SO-8EPR

Pin 1: OUT, Pin 2: ADJ/NC, Pin 3: GND, Pins 4, 6 and 7: NC, Pin 5: EN, Pin 8: IN

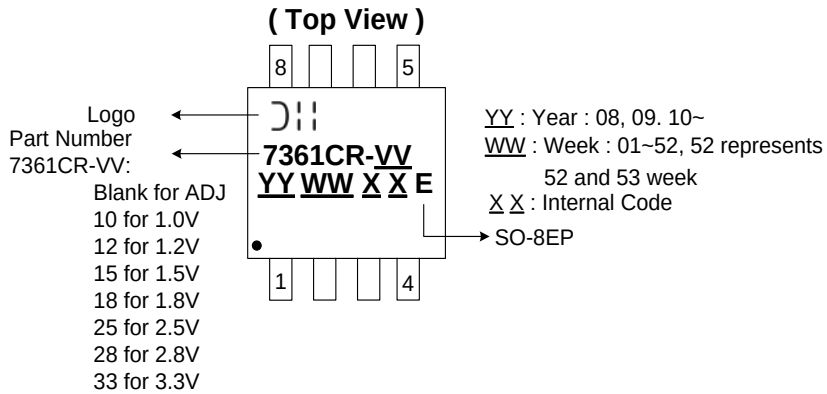

© Diodes Incorporated

Package Outline Dimensions (All dimensions in mm.)

Please see http://www.diodes.com/package-outlines.html for the latest version.

(1) Package Type: U-DFN3030-8 (Type E)

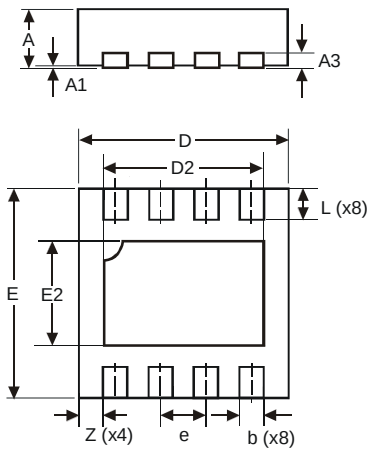

U-DFN3030-8 Type E			
Dim	**Min**	**Max**	**Typ**
A	0.57	0.63	0.60
A1	0	0.05	0.02
A3	–	–	0.15
b	0.20	0.30	0.25
D	2.95	3.05	3.00
D2	2.15	2.35	2.25
E	2.95	3.05	3.00
e	–	–	0.65
E2	1.40	1.60	1.50
L	0.30	0.60	0.45
Z	–	–	0.40
All Dimensions in mm			

(2) Package Type: SOT89-5

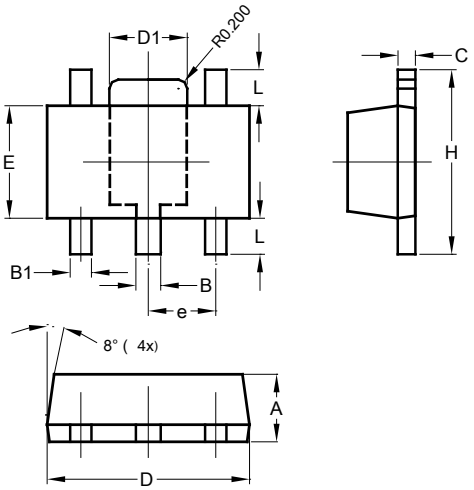

SOT89-5			
Dim	**Min**	**Max**	**Typ**
A	1.40	1.60	1.50
B	0.50	0.62	0.56
B1	0.44	0.54	0.48
C	0.35	0.43	0.38
D	4.40	4.60	4.50
D1	1.62	1.83	1.733
E	2.40	2.60	2.50
e	-	-	1.50
H	3.95	4.25	4.10
L	0.65	0.95	0.80
All Dimensions in mm			

© Diodes Incorporated

Package Outline Dimensions (Cont.) (All dimensions in mm.)

Please see http://www.diodes.com/package-outlines.html for the latest version.

(3) Package Type: TO252 (DPAK)

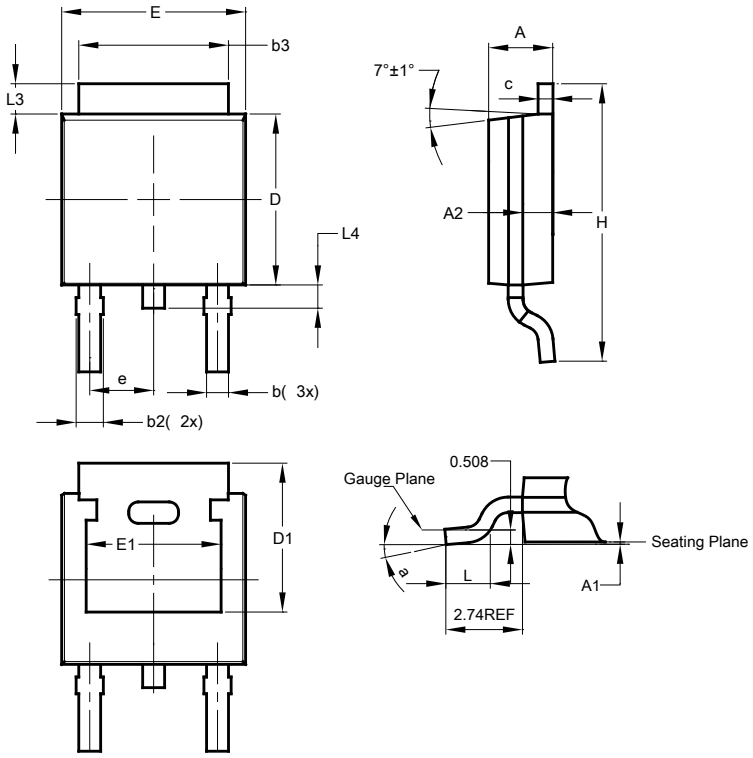

TO252 (DPAK)			
Dim	**Min**	**Max**	**Typ**
A	2.19	2.39	2.29
A1	0.00	0.13	0.08
A2	0.97	1.17	1.07
b	0.64	0.88	0.783
b2	0.76	1.14	0.95
b3	5.21	5.46	5.33
c	0.45	0.58	0.531
D	6.00	6.20	6.10
D1	5.21	-	-
e	-	-	2.286
E	6.45	6.70	6.58
E1	4.32	-	-
H	9.40	10.41	9.91
L	1.40	1.78	1.59
L3	0.88	1.27	1.08
L4	0.64	1.02	0.83
a	0°	10°	-
All Dimensions in mm			

© Diodes Incorporated

Package Outline Dimensions (Cont.) (All dimensions in mm.)

Please see http://www.diodes.com/package-outlines.html for the latest version.

(4) Package Type: SOT223

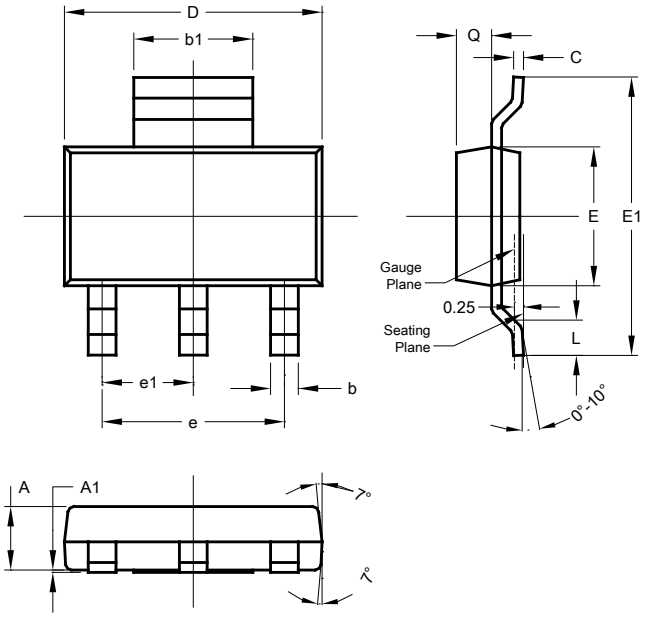

SOT223			
Dim	**Min**	**Max**	**Typ**
A	1.55	1.65	1.60
A1	0.010	0.15	0.05
b	0.60	0.80	0.70
b1	2.90	3.10	3.00
C	0.20	0.30	0.25
D	6.45	6.55	6.50
E	3.45	3.55	3.50
E1	6.90	7.10	7.00
e	-	-	4.60
e1	-	-	2.30
L	0.85	1.05	0.95
Q	0.84	0.94	0.89
All Dimensions in mm			

(5) Package Type: SO-8EP

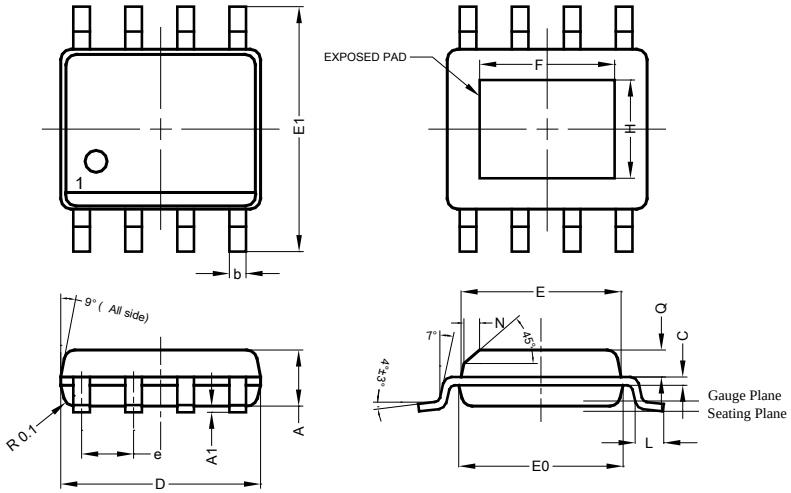

SO-8EP			
Dim	**Min**	**Max**	**Typ**
A	1.40	1.50	1.45
A1	0.00	0.13	-
b	0.30	0.50	0.40
C	0.15	0.25	0.20
D	4.85	4.95	4.90
E	3.80	3.90	3.85
E0	3.85	3.95	3.90
E1	5.90	6.10	6.00
e	-	-	1.27
F	2.75	3.35	3.05
H	2.11	2.71	2.41
L	0.62	0.82	0.72
N	-	-	0.35
Q	0.60	0.70	0.65
All Dimensions in mm			

© Diodes Incorporated

Suggested Pad Layout

Please see http://www.diodes.com/package-outlines.html for the latest version.

(1) Package Type: U-DFN3030-8 (Type E)

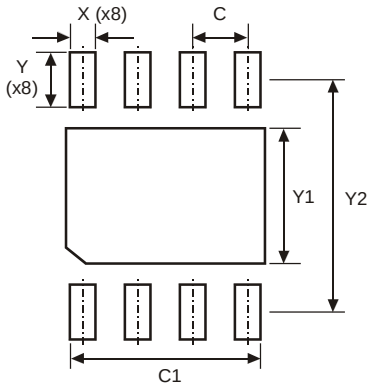

Dimensions	Value (in mm)
C	0.65
C1	2.35
X	0.30
Y	0.65
Y1	1.60
Y2	2.75

(2) Package Type: SOT89-5

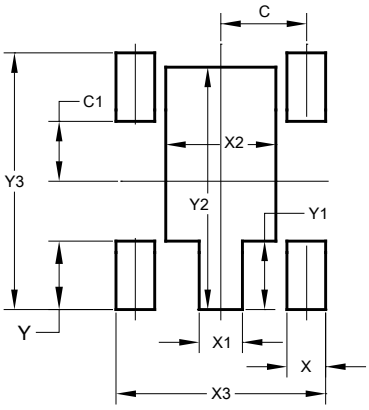

Dimensions	Value (in mm)
C	1.500
C1	1.050
X	0.680
X1	0.760
X2	1.930
X3	3.680
Y	1.200
Y1	1.200
Y2	4.250
Y3	4.500

(3) Package Type: TO252 (DPAK)

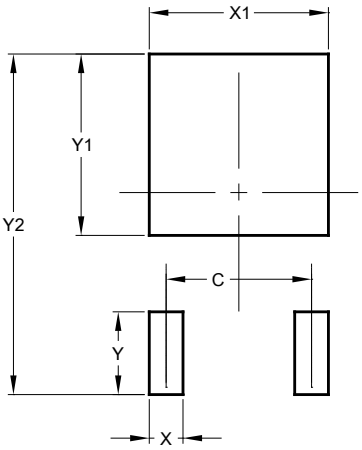

Dimensions	Value (in mm)
C	4.572
X	1.060
X1	5.632
Y	2.600
Y1	5.700
Y2	10.700

© Diodes Incorporated

Suggested Pad Layout (Cont.)

Please see http://www.diodes.com/package-outlines.html for the latest version.

(4) Package Type: SOT223

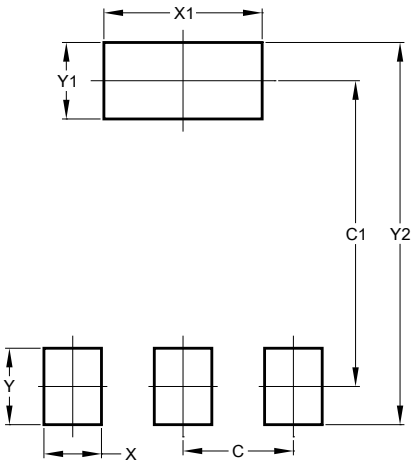

Dimensions	Value (in mm)
C	2.30
C1	6.40
X	1.20
X1	3.30
Y	1.60
Y1	1.60
Y2	8.00

(5) Package Type: SO-8EP

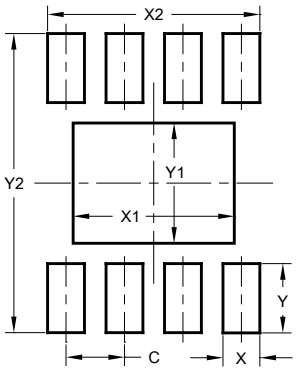

Dimensions	Value (in mm)
C	1.270
X	0.802
X1	3.502
X2	4.612
Y	1.505
Y1	2.613
Y2	6.500

© Diodes Incorporated

IMPORTANT NOTICE

DIODES INCORPORATED MAKES NO WARRANTY OF ANY KIND, EXPRESS OR IMPLIED, WITH REGARDS TO THIS DOCUMENT, INCLUDING, BUT NOT LIMITED TO, THE IMPLIED WARRANTIES OF MERCHANTABILITY AND FITNESS FOR A PARTICULAR PURPOSE (AND THEIR EQUIVALENTS UNDER THE LAWS OF ANY JURISDICTION).

Diodes Incorporated and its subsidiaries reserve the right to make modifications, enhancements, improvements, corrections or other changes without further notice to this document and any product described herein. Diodes Incorporated does not assume any liability arising out of the application or use of this document or any product described herein; neither does Diodes Incorporated convey any license under its patent or trademark rights, nor the rights of others. Any Customer or user of this document or products described herein in such applications shall assume all risks of such use and will agree to hold Diodes Incorporated and all the companies whose products are represented on Diodes Incorporated website, harmless against all damages.

Diodes Incorporated does not warrant or accept any liability whatsoever in respect of any products purchased through unauthorized sales channel. Should Customers purchase or use Diodes Incorporated products for any unintended or unauthorized application, Customers shall indemnify and hold Diodes Incorporated and its representatives harmless against all claims, damages, expenses, and attorney fees arising out of, directly or indirectly, any claim of personal injury or death associated with such unintended or unauthorized application.

Products described herein may be covered by one or more United States, international or foreign patents pending. Product names and markings noted herein may also be covered by one or more United States, international or foreign trademarks.

This document is written in English but may be translated into multiple languages for reference. Only the English version of this document is the final and determinative format released by Diodes Incorporated.

LIFE SUPPORT

Diodes Incorporated products are specifically not authorized for use as critical components in life support devices or systems without the express written approval of the Chief Executive Officer of Diodes Incorporated. As used herein:

A. Life support devices or systems are devices or systems which:

1. are intended to implant into the body, or
2. support or sustain life and whose failure to perform when properly used in accordance with instructions for use provided in the labeling can be reasonably expected to result in significant injury to the user.

B. A critical component is any component in a life support device or system whose failure to perform can be reasonably expected to cause the failure of the life support device or to affect its safety or effectiveness.

Customers represent that they have all necessary expertise in the safety and regulatory ramifications of their life support devices or systems, and acknowledge and agree that they are solely responsible for all legal, regulatory and safety-related requirements concerning their products and any use of Diodes Incorporated products in such safety-critical, life support devices or systems, notwithstanding any devices- or systems-related information or support that may be provided by Diodes Incorporated. Further, Customers must fully indemnify Diodes Incorporated and its representatives against any damages arising out of the use of Diodes Incorporated products in such safety-critical, life support devices or systems.

Copyright © 2020, Diodes Incorporated

www.diodes.com

ENTEGRECİ

Bu belge www.entegreci.com üzerinden sunulmaktadır.

Elektronik komponent tedarikinde Entegreci

Entegreci, Eskişehir merkezli, Türkiye geneline satış yapan bir elektronik komponent mağazasıdır. Entegreler (IC), mikrodenetleyiciler, transistörler, diyotlar, pasif elemanlar, konnektörler, modüller ve geliştirme kartları tek adetten seri üretim adetlerine kadar satılır. Ürün sayfalarında güncel stok durumunu, fiyatı ve datasheet bağlantısını bulabilirsiniz.

Parça koduyla arama

Üretici parça numarasını yazın; stok ve fiyatı hemen görün.

www.entegreci.com

Ürün kategorileri

Entegreden kapasitöre tüm elektronik komponent kategorileri.

Kategorilere göz atın

Üreticiler

Aradığınız üreticinin ürünlerini tek sayfada inceleyin.

Üreticileri görün

Toplu alım ve teklif

Listede olmayan ya da yüksek adetli parçalar için teklif isteyin.

Teklif isteyin

www.entegreci.com | **destek@entegreci.com** | **0850 305 90 34**

Entegreci is an online electronic components store based in Türkiye. Search by manufacturer part number to see stock, prices and datasheets for integrated circuits, microcontrollers, transistors, passive components and connectors, or request a quote for parts that are not listed.

Bu sayfa Entegreci tarafından eklenmiştir. Belgenin önceki sayfaları asıl yayıncısına aittir ve içeriği değiştirilmemiştir; en güncel sürüm için belgenin yayıncısına başvurun.