NOT RECOMMENDED FOR NEW DESIGN
USE AP7366EA

Lead-free Green

AP7366

600mA, LOW QUIESCENT CURRENT FAST TRANSIENT LOW DROPOUT LINEAR REGULATOR

Description

The DIODES™ AP7366 is a 600mA, adjustable and fixed output voltage, low-dropout linear regulator. This device includes pass element, error amplifier, band-gap, current limit and thermal-shutdown circuitry. The device is turned on when EN pin is set to logic-high level.

The characteristics of low-dropout voltage and low quiescent current make it suitable for low-power applications such as battery-powered devices. The typical quiescent current is approximately 60µA. Built-in current-limit and thermal-shutdown functions prevent IC from damage in fault conditions.

This device is available with adjustable output from 0.8V to 5.0V, and fixed version with 1.0V, 1.2V, 1.5V, 1.8V, 2.0V, 2.5V, 2.8V, 3.0V, 3.3V, 3.6V and 3.9V outputs. Please contact your local sales office for other voltage options.

The AP7366 is available in SOT25 and U-DFN2020-6 packages.

Features

- 600mA Low-Dropout Regulator with EN
- Low I_Q: 60µA
- Wide Input Voltage Range: 2.2V to 6V
- Wide Adjustable Output: 0.8V to 5.0V
- Fixed Output Options: 1.0V, 1.2V, 1.5V, 1.8V, 2.0V, 2.5V, 2.8V, 3.0V, 3.3V, 3.6V, 3.9V
- High PSRR: 75dB at 1kHz
- Fast Start-Up Time: 150µs
- Stable with Low ESR, 1µF Ceramic Output Capacitor
- Excellent Load/Line Transient Response
- Low Dropout: 300mV at 600mA
- Current-Limit and Short-Circuit Protection
- Thermal-Shutdown Protection
- Ambient Temperature Range: -40°C to +85°C
- **Totally Lead-Free & Fully RoHS Compliant (Notes 1 & 2)**
- **Halogen and Antimony Free. "Green" Device (Note 3)**
- **For automotive applications requiring specific change control (i.e. parts qualified to AEC-Q100/101/104/200, PPAP capable, and manufactured in IATF 16949 certified facilities), please contact us or your local Diodes representative. https://www.diodes.com/quality/product-definitions/**

Pin Assignments

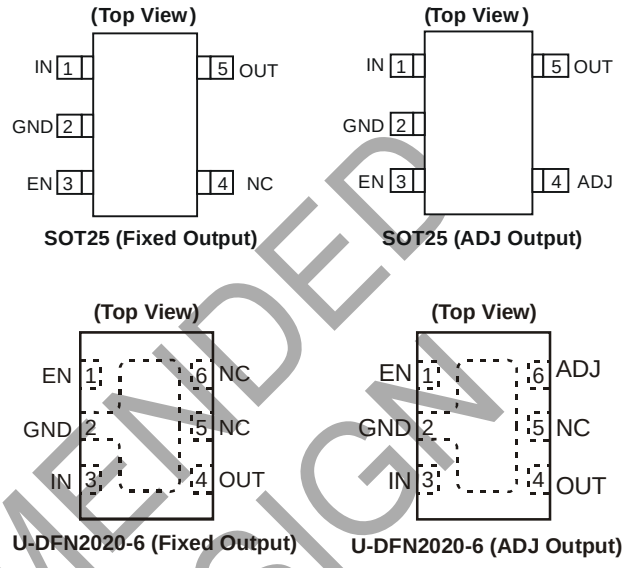

Applications

- Servers and notebook computers
- Low and medium power applications
- FPGA and DSP core or I/O power
- Consumer electronics

NOT RECOMMENDED FOR NEW DESIGN

Notes:
1. No purposely added lead. Fully EU Directive 2002/95/EC (RoHS), 2011/65/EU (RoHS 2) & 2015/863/EU (RoHS 3) compliant.
2. See https://www.diodes.com/quality/lead-free/ for more information about Diodes Incorporated's definitions of Halogen- and Antimony-free, "Green" and Lead-free.
3. Halogen- and Antimony-free "Green" products are defined as those which contain <900ppm bromine, <900ppm chlorine (<1500ppm total Br + Cl) and <1000ppm antimony compounds.

© 2023 Copyright Diodes Incorporated. All Rights Reserved.

Typical Applications Circuit

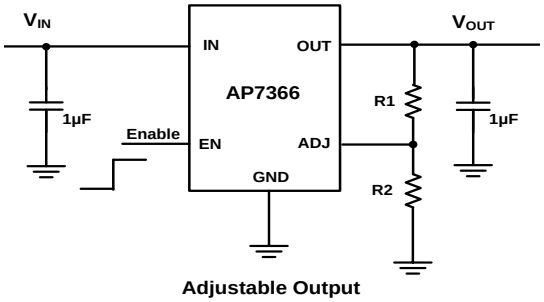

Adjustable Output

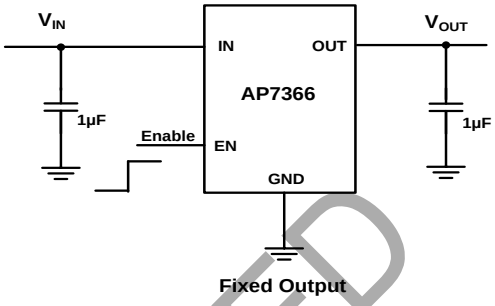

Fixed Output

$$V_{OUT} = V_{REF}\left(1+\frac{R_1}{R_2}\right) \text{ where } R_2 \le 80k\Omega$$

Pin Descriptions

Pin Name	Pin Number				Functions
	SOT25 (Fixed Output)	SOT25 (ADJ Output)	U-DFN2020-6 (Fixed Output)	U-DFN2020-6 (ADJ Output)	
IN	1	1	3	3	Voltage Input Pin. Bypass to ground through at least 1µF MLCC capacitor
GND	2	2	2	2	Ground
EN	3	3	1	1	Enable Input, Active High
ADJ	—	4	—	6	Output Feedback Pin
NC	4	—	5, 6	5	No Connection
OUT	5	5	4	4	Voltage Output Pin. Bypass to ground through 1µF MLCC capacitor

NOT RECOMMENDED FOR NEW DESIGN

Functional Block Diagram

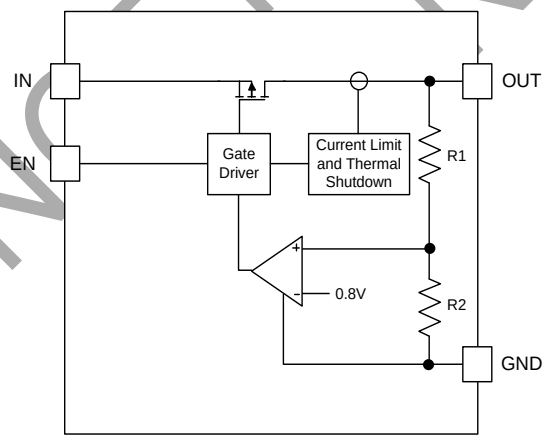

Fixed Output

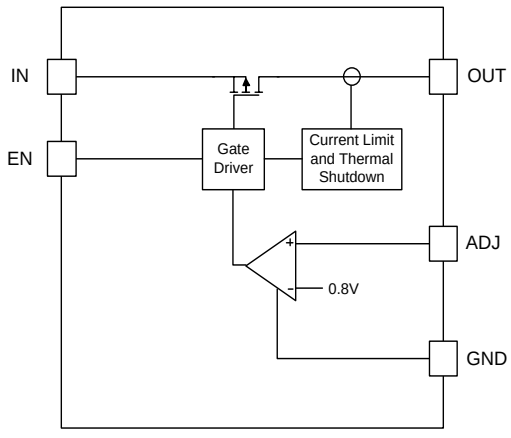

Adjustable Output

© 2023 Copyright Diodes Incorporated. All Rights Reserved.

Absolute Maximum Ratings (@T_A = +25°C, unless otherwise specified.)

Symbol	Parameter	Ratings	Unit
ESD HBM	Human Body Model ESD Protection	2000	V
ESD CDM	Charged Device Model	±1000	V
V_{IN}	Input Voltage	6.5	V
—	OUT, EN Voltage	V_{IN} +0.3	V
T_{ST}	Storage Temperature Range	-65 to +150	°C
T_J	Maximum Junction Temperature	+150	°C

Recommended Operating Conditions (@T_A = +25°C, unless otherwise specified.)

Symbol	Parameter	Min	Max	Unit
V_{IN}	Input Voltage	2.2	6	V
V_{OUT}	Output Voltage	0.8	5	V
I_{OUT}	Output Current (Note 4)	0	600	mA
T_A	Operating Ambient Temperature	-40	+85	°C

Note: 4. The device maintains a stable, regulated output voltage without a load current.

NOT RECOMMENDED FOR NEW DESIGN

© 2023 Copyright Diodes Incorporated. All Rights Reserved.

Electrical Characteristics (@T_A = +25°C, V_{IN} = V_{OUT} +1V, C_{OUT} = 1µF, C_{IN} = 1µF, V_{EN} = V_{IN}, unless otherwise specified.)

Symbol	Parameter	Test Conditions		Min	Typ	Max	Unit
V_{REF}	ADJ Reference Voltage (Adjustable Version)	I_{OUT} = 10mA		0.788	0.8	0.812	V
I_{ADJ}	ADJ Leakage (Adjustable Version)	—		—	0.1	0.5	µA
I_Q	Input Quiescent Current	V_{EN} = V_{IN}, I_{OUT} = 0mA		—	60	80	µA
V_{OUT}	Output Voltage Accuracy	I_{OUT} = 10mA	1.0V ≦ V_{OUT} < 1.5V	V_{OUT} - 0.015	V_{OUT}	V_{OUT} + 0.015	V
			1.5V ≦ V_{OUT} ≦ 3.9V	V_{OUT} * 0.99	V_{OUT}	V_{OUT} * 1.01	%
I_{SHDN}	Input Shutdown Current	V_{EN} = 0V, I_{OUT} = 0mA		-1.0	0.05	1.0	µA
ΔV_{OUT} /ΔV_{IN}/V_{OUT}	Line Regulation	V_{IN} = (V_{OUT} +1V) to 5.5V, I_{OUT} = 10mA	T_A = +25°C	—	0.01	0.1	%/V
			-40°C ≦ T_A ≦ +85°C	—	—	0.2	
ΔV_{OUT}/V_{OUT}	Load Regulation	I_{OUT} = 1mA to 600mA	1.2V < V_{OUT} ≦ 3.9V	-1.0	—	+1.0	%
			1.0V ≦ V_{OUT} ≦ 1.2V	-1.5	—	+1.5	
$V_{DROPOUT}$	Dropout Voltage (Note 5)	V_{OUT} = 1.0V, I_{OUT} = 300mA		—	650	900	mV
		V_{OUT} = 1.2V, I_{OUT} = 300mA		—	480	700	
		V_{OUT} = 1.5V, I_{OUT} = 300mA		—	200	340	
		V_{OUT} = 1.8V, I_{OUT} = 300mA		—	160	250	
		V_{OUT} = 2.0V, I_{OUT} = 300mA		—	140	200	
		V_{OUT} = 2.5V, I_{OUT} = 300mA		—	125	190	
		V_{OUT} = 2.8V, I_{OUT} = 300mA		—	115	180	
		V_{OUT} = 3.0V, I_{OUT} = 300mA		—	110	170	
		V_{OUT} = 3.3V, I_{OUT} = 300mA		—	105	160	
		V_{OUT} = 3.6V, I_{OUT} = 300mA		—	105	160	
		V_{OUT} = 3.9V, I_{OUT} = 300mA		—	100	150	
$V_{DROPOUT}$	Dropout Voltage (Note 5)	V_{OUT} = 1.0V, I_{OUT} = 600mA		—	850	1200	mV
		V_{OUT} = 1.2V, I_{OUT} = 600mA		—	800	1000	
		V_{OUT} = 1.5V, I_{OUT} = 600mA		—	450	700	
		V_{OUT} = 1.8V, I_{OUT} = 600mA		—	320	420	
		V_{OUT} = 2.0V, I_{OUT} = 600mA		—	285	400	
		V_{OUT} = 2.5V, I_{OUT} = 600mA		—	250	380	
		V_{OUT} = 2.8V, I_{OUT} = 600mA		—	230	350	
		V_{OUT} = 3.0V, I_{OUT} = 600mA		—	220	330	
		V_{OUT} = 3.3V, I_{OUT} = 600mA		—	210	320	
		V_{OUT} = 3.6V, I_{OUT} = 600mA		—	210	320	
		V_{OUT} = 3.9V, I_{OUT} = 600mA		—	190	290	
PSRR	PSRR (Note 6)	f = 1kHz, I_{OUT} = 100mA		—	75	—	dB
		f = 10kHz, I_{OUT} = 100mA		—	55	—	dB
I_{SHORT}	Short-Circuit Current	V_{IN} = V_{OUT} + 1V, Output Voltage <15% of V_{OUT}		—	250	—	mA
t_{ST}	Start-Up Time	V_{OUT} = 0V to 3.0V, R_L = 30Ω		—	150	—	µs
I_{LIMIT}	Current Limit	V_{IN} = V_{OUT} + 1V		0.66	1.0	—	A
V_{IL}	EN Input Logic-Low Voltage	V_{IN} = V_{IN-Min} to V_{IN-Max}		—	—	0.3	V
V_{IH}	EN Input Logic-High Voltage	V_{IN} = V_{IN-Min} to V_{IN-Max}		1.0	—	V_{IN}	V
I_{EN}	EN Input Leakage Current	V_{IN} = 5.5V or V_{EN} = 0V		-0.1	—	+0.1	µA
T_{SHDN}	Thermal Shutdown Threshold	—		—	+150	—	°C
T_{HYS}	Thermal Shutdown Hysteresis	—		—	+20	—	°C

Notes: 5. Dropout voltage is the voltage difference between the input and the output at which the output voltage drops 2% below its nominal value. This parameter only applies to input voltages above minimum V_{IN} = 2.0V.
6. At V_{IN} < 2.3V, the PSRR performance may be reduced.

NOT RECOMMENDED FOR NEW DESIGN

© 2023 Copyright Diodes Incorporated. All Rights Reserved.

Electrical Characteristics (continued) (@T_A = +25°C, V_{IN} = V_{OUT} +1V, C_{OUT} = 1µF, C_{IN} = 1µF, V_{EN} = V_{IN}, unless otherwise specified.)

Symbol	Parameter	Test Conditions	Min	Typ	Max	Unit
R_{ENPD}	EN Pulldown Resistor	—	—	3	—	MΩ
R_{PD}	Output Discharge Resistor	V_{OL} = 1V	—	100	—	Ω
ΔV_{OUT} /ΔT_A/V_{OUT}	Output Voltage Temperature Coefficient	I_{OUT} = 100mA, -40°C ≤ T_A ≤ +85°C	—	±100	—	ppm/°C
θ_{JA}	Thermal Resistance Junction-to-Ambient	SOT25 (Note 7)	—	169	—	°C/W
		U-DFN2020-6 (Note 7)	—	132	—	
θ_{JC}	Thermal Resistance Junction-to-Case	SOT25 (Note 7)	—	31	—	°C/W
		U-DFN2020-6 (Note 7)	—	48	—	

Note: 7. Test condition for all packages: Device mounted on FR-4 substrate PC board, 1oz copper, with minimum recommended pad layout.

Typical Performance Characteristics

Start-up Time

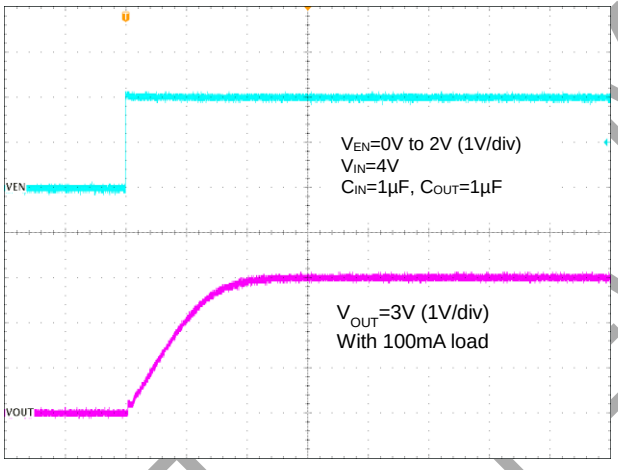

Time (100µs/div)

Start-up Time

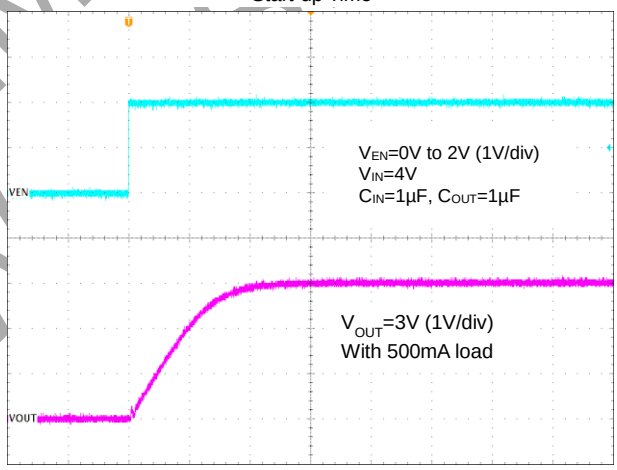

Time (100µs/div)

Line Transient Response

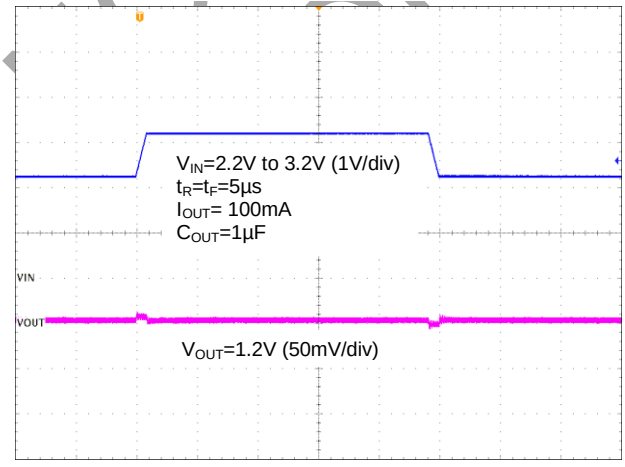

Time (40µs/div)

Line Transient Response

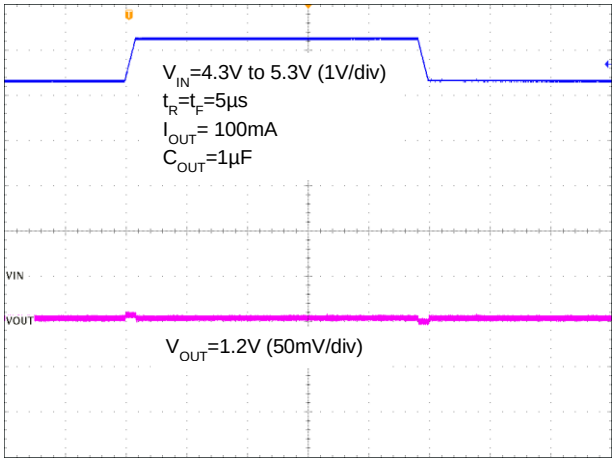

Time (40µs/div)

NOT RECOMMENDED FOR NEW DESIGN

© 2023 Copyright Diodes Incorporated. All Rights Reserved.

Typical Performance Characteristics (continued)

Load Transient Response

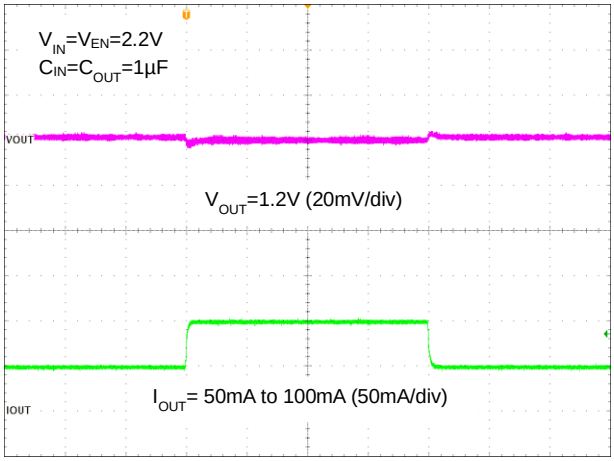

Time (200µs/div)

Load Transient Response

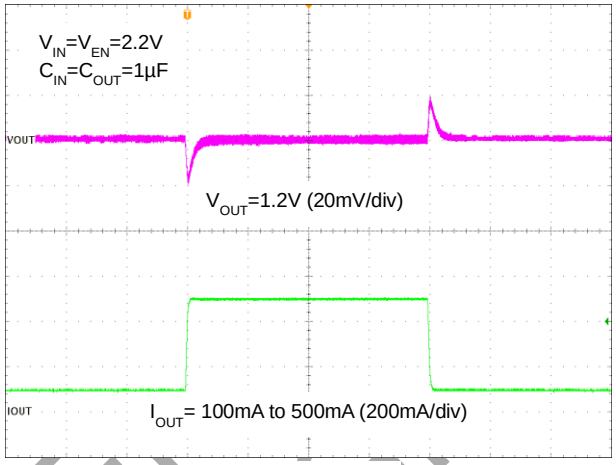

Time (200µs/div)

Load Transient Response

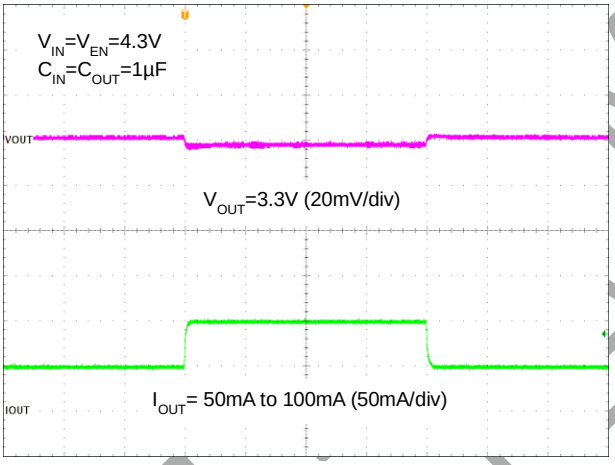

Time (200µs/div)

Load Transient Response

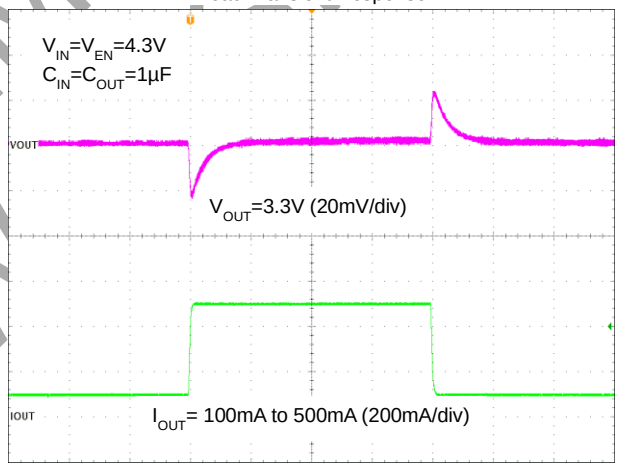

Time (200µs/div)

Load Transient Response

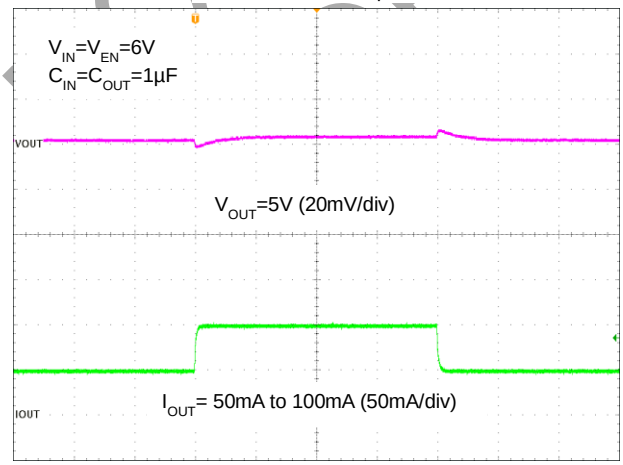

Time (200µs/div)

Load Transient Response

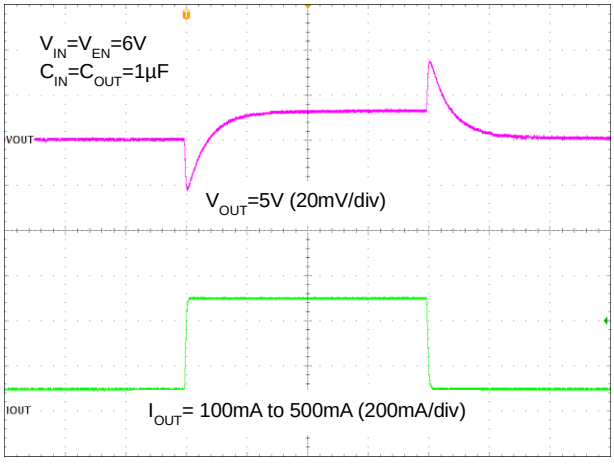

Time (200µs/div)

NOT RECOMMENDED FOR NEW DESIGN

© 2023 Copyright Diodes Incorporated. All Rights Reserved.

Typical Performance Characteristics (continued)

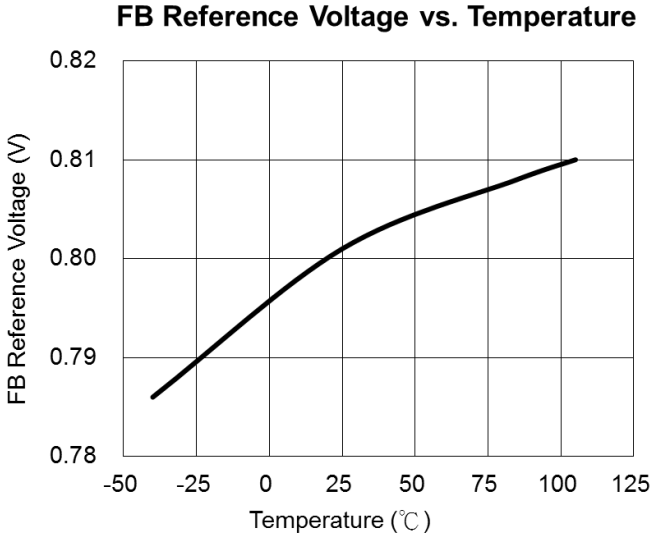

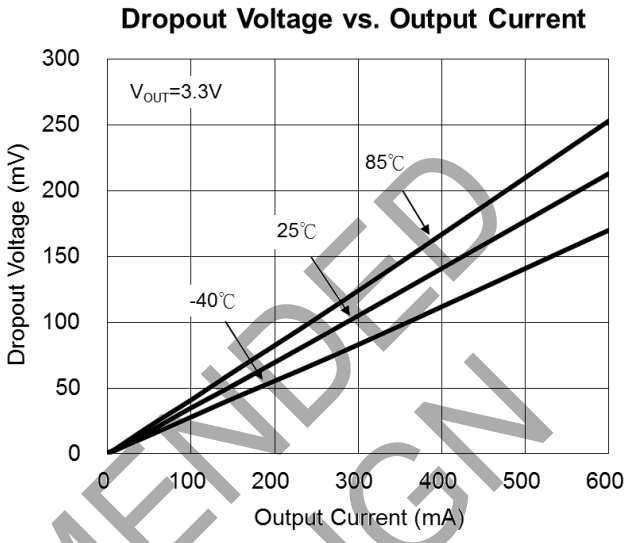

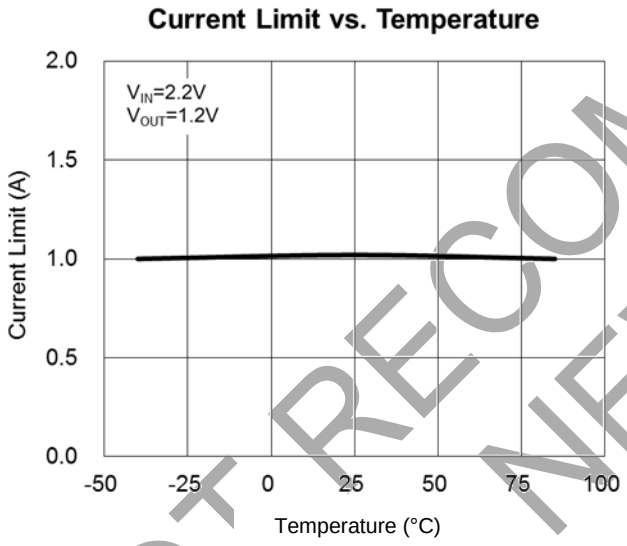

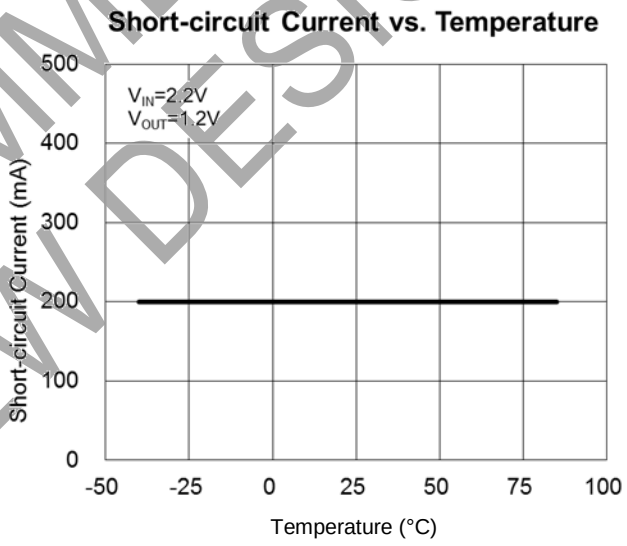

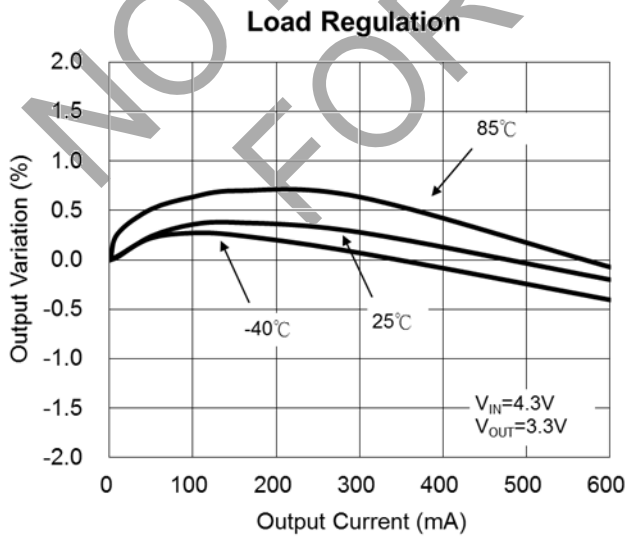

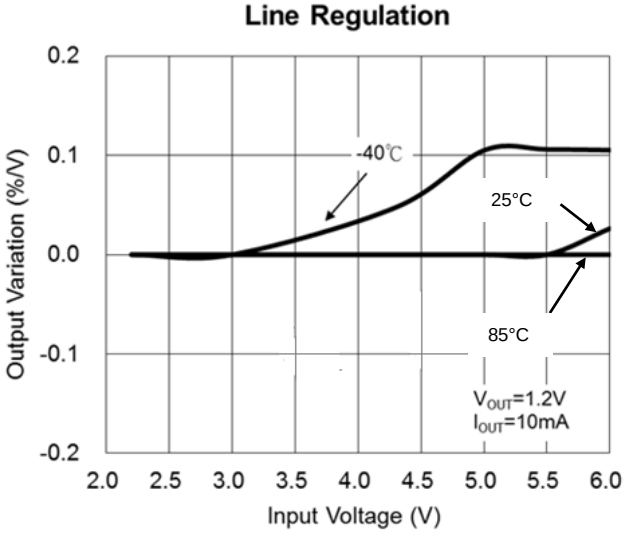

NOT RECOMMENDED FOR NEW DESIGN

© 2023 Copyright Diodes Incorporated. All Rights Reserved.

Typical Performance Characteristics (continued)

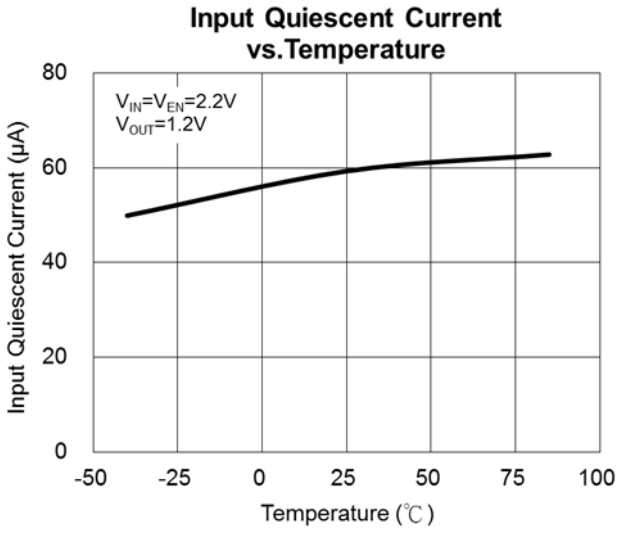

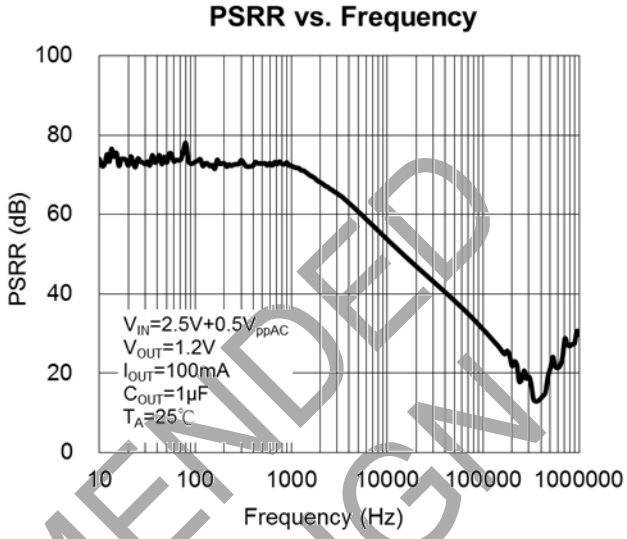

Application Information

Input Capacitor

A 1μF ceramic capacitor is recommended between IN and GND pins to decouple input power supply glitch and noise. The amount of the capacitance may be increased without limit. This input capacitor must be located as close as possible to the device to assure input stability and reduce noise. For PCB layout, a wide copper trace is required for both IN and GND pins. A lower ESR capacitor type allows the use of less capacitance, while higher ESR type requires more capacitance.

Output Capacitor

The output capacitor is required to stabilize and improve the transient response of the LDO. The AP7366 is stable with very small ceramic output capacitors. Using a ceramic capacitor value that is at least 2.2μF with 10mΩ ≦ ESR ≦ 300mΩ on the output ensures stability. Higher capacitance values help to improve line- and load-transient response. The output capacitance may be increased to keep low undershoot and overshoot. Output capacitor must be placed as close as possible to OUT and GND pins.

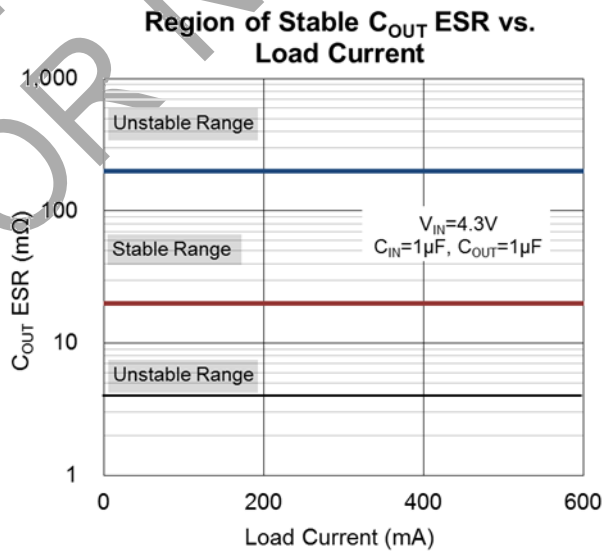

NOT RECOMMENDED FOR NEW DESIGN

© 2023 Copyright Diodes Incorporated. All Rights Reserved.

Application Information (continued)

Adjustable Operation

The AP7366 provides output voltage from 0.8V to 5.0V through external resistor divider as shown below.

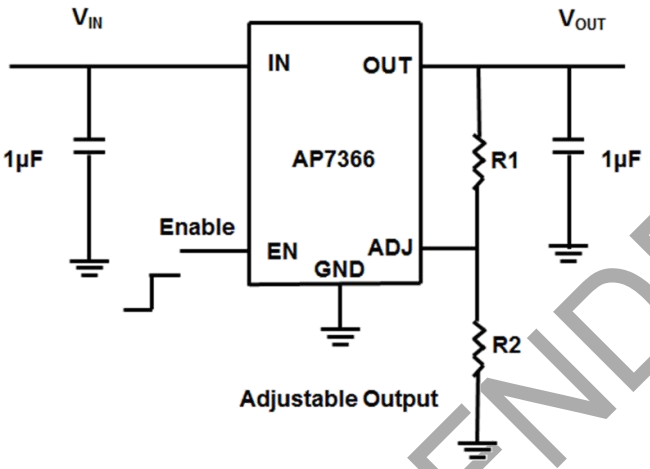

The output voltage is calculated by:

$$V_{OUT} = V_{REF}\left(1 + \frac{R_1}{R_2}\right)$$

Where V_{REF} = 0.8V (the internal reference voltage)

Rearranging the equation will give the following that is used for adjusting the output to a particular voltage:

$$R_1 = R_2\left(\frac{V_{OUT}}{V_{REF}} - 1\right)$$

To maintain the stability of the internal reference voltage, R2 needs to be kept smaller than 80kΩ.

No Load Stability

Other than external resistor divider, no minimum load is required to keep the device stable. The device will remain stable and regulated in no load condition.

ON/OFF Input Operation

The AP7366 is turned on by setting the EN pin high, and is turned off by pulling it low. If this feature is not used, the EN pin should be tied to IN pin to keep the regulator output on at all time. To ensure proper operation, the signal source used to drive the EN pin must be able to swing above and below the specified turn-on/off voltage thresholds listed in the *Electrical Characteristics* section under V_{IL} and V_{IH}.

Current-Limit Protection

When output current at OUT pin is higher than current-limit threshold, the current-limit protection will be triggered and clamp the output current to prevent overcurrent and to protect the regulator from damage due to overheating.

Short-Circuit Protection

When OUT pin is short-circuit to GND, short circuit protection will be triggered and clamp the output current to approximately 250mA. Full current is restored when the output voltage exceeds 15% of V_{OUT}. This feature protects the regulator from overcurrent and damage due to overheating.

Thermal-Shutdown Protection

Thermal protection disables the output when the junction temperature rises to approximately +150°C, allowing the device to cool down. When the junction temperature reduces to approximately +130°C, the output circuitry is enabled again. Depending on power dissipation, thermal resistance, and ambient temperature, the thermal protection circuit may cycle on and off. This cycling limits the heat dissipation of the regulator, protecting it from damage due to overheating.

NOT RECOMMENDED FOR NEW DESIGN

© 2023 Copyright Diodes Incorporated. All Rights Reserved.

Application Information (continued)

Ultra Fast Start-Up

After enabled, the AP7366 is able to provide full power in as little as tens of microseconds, typically 200μs, without sacrificing low ground current. This feature will help load circuitry move in and out of standby mode in real time, eventually extend battery life for mobile phones and other portable devices.

Low Quiescent Current

The AP7366, consuming only around 60μA for all input range, provides great power saving in portable and low-power applications.

Power Dissipation

The device power dissipation and proper sizing of the thermal plane that is connected to the thermal pad is critical to avoid thermal shutdown and ensure reliable operation. Power dissipation of the device depends on input voltage and load conditions and can be calculated by:

$$P_D = (V_{IN} - V_{OUT}) \times I_{OUT}$$

The maximum power dissipation, handled by the device, depends on the maximum junction to ambient thermal resistance, maximum ambient temperature, and maximum device junction temperature, which can be calculated by the equation in the following:

$$P_D(\max@T_A) = \frac{(+150°C - T_A)}{R_{\theta JA}}$$

Ordering Information

AP7366 - X X - X

Output	Package	Packing
Blank : ADJ 10 : 1.0V 12 : 1.2V 15 : 1.5V 18 : 1.8V 20 : 2.0V 25 : 2.5V 28 : 2.8V 30 : 3.0V 33 : 3.3V 36 : 3.6V 39 : 3.9V	W5 : SOT25 SN : U-DFN2020-6	7 : 7" Tape & Reel

Part Number	Package Code	Package	Packing	
			Qty.	Carrier
AP7366-W5-7	W5	SOT25	3,000	7'' Tape & Reel
AP7366-XXW5-7	W5	SOT25	3,000	7'' Tape & Reel
AP7366-SN-7	SN	U-DFN2020-6	3,000	7'' Tape & Reel
AP7366-XXSN-7	SN	U-DFN2020-6	3,000	7'' Tape & Reel

NOT RECOMMENDED FOR NEW DESIGN

© 2023 Copyright Diodes Incorporated. All Rights Reserved.

Marking Information

(1) SOT25

(Top View)

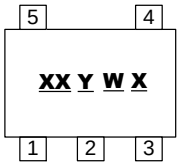

XX : Identification code
Y : Year 0~9
W : Week : A~Z : 1~26 week;
a~z : 27~52 week; z represents
52 and 53 week
X : Internal code

Part Number	Package	Identification Code
AP7366-W5-7	SOT25	Y2
AP7366-10W5-7	SOT25	Y4
AP7366-12W5-7	SOT25	Y5
AP7366-15W5-7	SOT25	Y6
AP7366-18W5-7	SOT25	Y7
AP7366-20W5-7	SOT25	Y8
AP7366-25W5-7	SOT25	Y9
AP7366-28W5-7	SOT25	YC
AP7366-30W5-7	SOT25	YD
AP7366-33W5-7	SOT25	YE
AP7366-36W5-7	SOT25	WZ
AP7366-39W5-7	SOT25	YF

(2) U-DFN2020-6

(Top View)

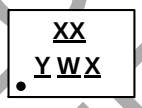

XX : Identification Code
Y : Year : 0~9
W : Week : A~Z : 1~26 week;
a~z : 27~52 week; z represents
52 and 53 week
X : Internal code

Part Number	Package	Identification Code
AP7366-SN-7	U-DFN2020-6	Y2
AP7366-10SN-7	U-DFN2020-6	Y4
AP7366-12SN-7	U-DFN2020-6	Y5
AP7366-15SN-7	U-DFN2020-6	Y6
AP7366-18SN-7	U-DFN2020-6	Y7
AP7366-20SN-7	U-DFN2020-6	Y8
AP7366-25SN-7	U-DFN2020-6	Y9
AP7366-28SN-7	U-DFN2020-6	YC
AP7366-30SN-7	U-DFN2020-6	YD
AP7366-33SN-7	U-DFN2020-6	YE
AP7366-36SN-7	U-DFN2020-6	WZ
AP7366-39SN-7	U-DFN2020-6	YF

NOT RECOMMENDED FOR NEW DESIGN

© 2023 Copyright Diodes Incorporated. All Rights Reserved.

Package Outline Dimensions

Please see http://www.diodes.com/package-outlines.html for the latest version.

(1) Package Type: SOT25

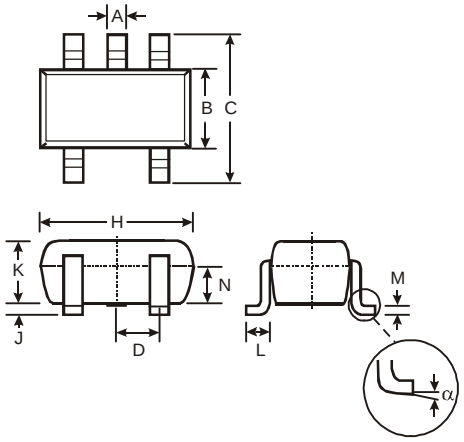

SOT25			
Dim	Min	Max	Typ
A	0.35	0.50	0.38
B	1.50	1.70	1.60
C	2.70	3.00	2.80
D	-	-	0.95
H	2.90	3.10	3.00
J	0.013	0.10	0.05
K	1.00	1.30	1.10
L	0.35	0.55	0.40
M	0.10	0.20	0.15
N	0.70	0.80	0.75
α	0°	8°	-
All Dimensions in mm			

(2) Package Type: U-DFN2020-6

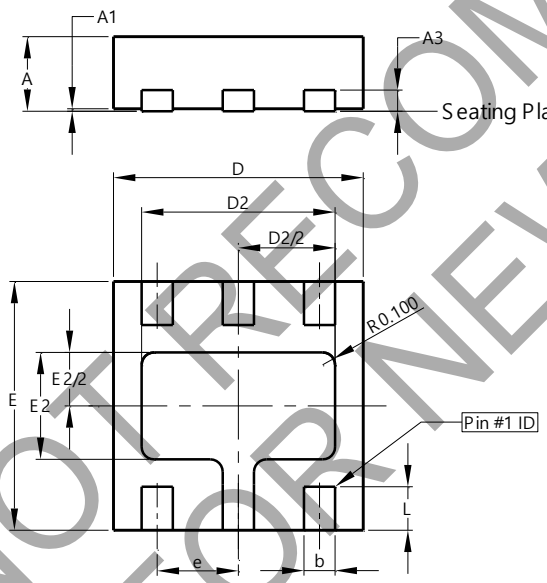

U-DFN2020-6			
Dim	Min	Max	Typ
A	0.57	0.63	0.60
A1	0	0.05	0.03
A3	-	-	0.15
b	0.20	0.30	0.25
D	1.95	2.075	2.00
D2	1.45	1.65	1.55
e	-	-	0.65
E	1.95	2.075	2.00
E2	0.76	0.96	0.86
L	0.30	0.40	0.35
All Dimensions in mm			

NOT RECOMMENDED FOR NEW DESIGN

© 2023 Copyright Diodes Incorporated. All Rights Reserved.

Suggested Pad Layout

Please see http://www.diodes.com/package-outlines.html for the latest version.

(1) Package Type: SOT25

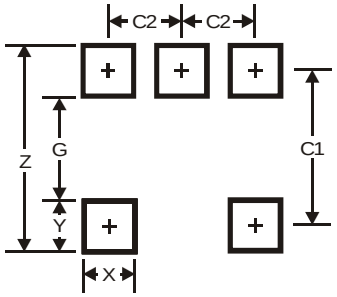

Dimensions	Value
Z	3.20
G	1.60
X	0.55
Y	0.80
C1	2.40
C2	0.95

(2) Package Type: U-DFN2020-6

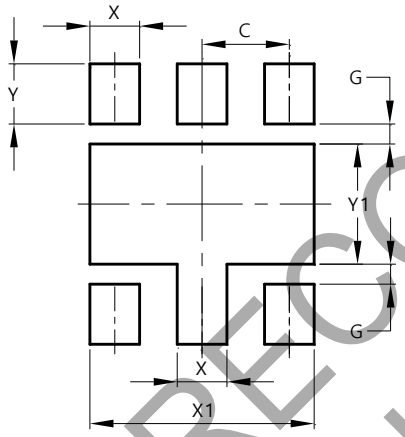

Dimensions	Value (in mm)
C	0.65
G	0.15
X	0.37
X1	1.67
Y	0.45
Y1	0.90

NOT RECOMMENDED FOR NEW DESIGN

© 2023 Copyright Diodes Incorporated. All Rights Reserved.

Tape Orientation (Note 8)

For U-DFN2020-6

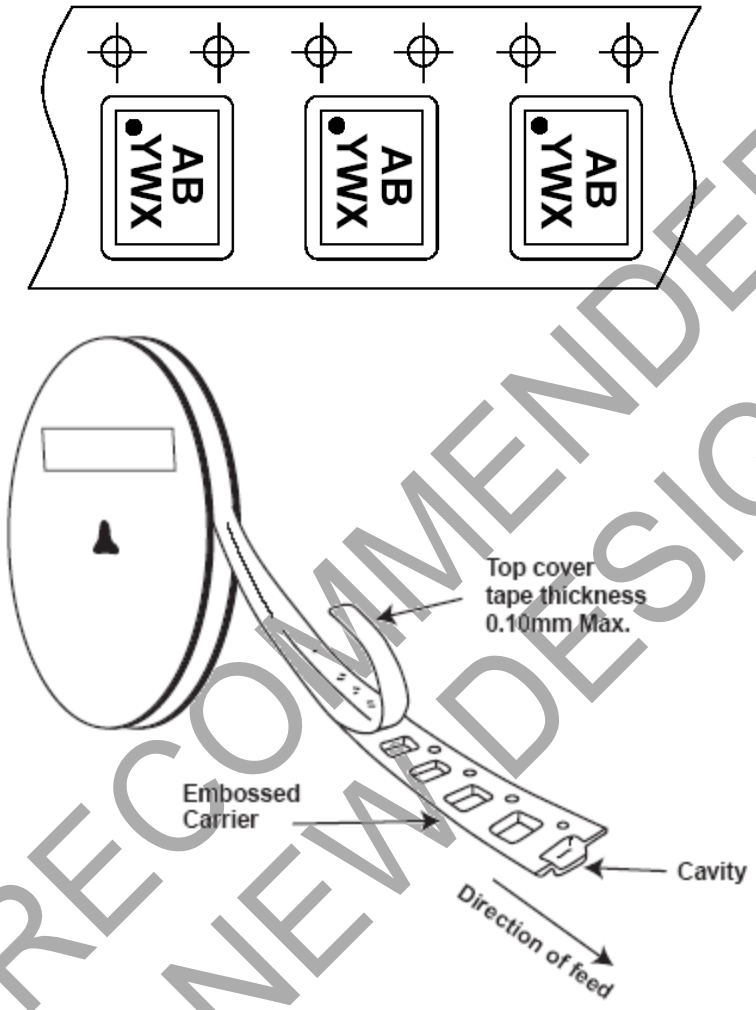

NOT RECOMMENDED FOR NEW DESIGN

Note: 8. The taping orientation of the other package type can be found on our website at http://www.diodes.com/package-outlines.html.

© 2023 Copyright Diodes Incorporated. All Rights Reserved.

IMPORTANT NOTICE

1. DIODES INCORPORATED (Diodes) AND ITS SUBSIDIARIES MAKE NO WARRANTY OF ANY KIND, EXPRESS OR IMPLIED, WITH REGARDS TO ANY INFORMATION CONTAINED IN THIS DOCUMENT, INCLUDING, BUT NOT LIMITED TO, THE IMPLIED WARRANTIES OF MERCHANTABILITY, FITNESS FOR A PARTICULAR PURPOSE OR NON-INFRINGEMENT OF THIRD PARTY INTELLECTUAL PROPERTY RIGHTS (AND THEIR EQUIVALENTS UNDER THE LAWS OF ANY JURISDICTION).

2. The Information contained herein is for informational purpose only and is provided only to illustrate the operation of Diodes' products described herein and application examples. Diodes does not assume any liability arising out of the application or use of this document or any product described herein. This document is intended for skilled and technically trained engineering customers and users who design with Diodes' products. Diodes' products may be used to facilitate safety-related applications; however, in all instances customers and users are responsible for (a) selecting the appropriate Diodes products for their applications, (b) evaluating the suitability of Diodes' products for their intended applications, (c) ensuring their applications, which incorporate Diodes' products, comply the applicable legal and regulatory requirements as well as safety and functional-safety related standards, and (d) ensuring they design with appropriate safeguards (including testing, validation, quality control techniques, redundancy, malfunction prevention, and appropriate treatment for aging degradation) to minimize the risks associated with their applications.

3. Diodes assumes no liability for any application-related information, support, assistance or feedback that may be provided by Diodes from time to time. Any customer or user of this document or products described herein will assume all risks and liabilities associated with such use, and will hold Diodes and all companies whose products are represented herein or on Diodes' websites, harmless against all damages and liabilities.

4. Products described herein may be covered by one or more United States, international or foreign patents and pending patent applications. Product names and markings noted herein may also be covered by one or more United States, international or foreign trademarks and trademark applications. Diodes does not convey any license under any of its intellectual property rights or the rights of any third parties (including third parties whose products and services may be described in this document or on Diodes' website) under this document.

5. Diodes' products are provided subject to Diodes' Standard Terms and Conditions of Sale (https://www.diodes.com/about/company/terms-and-conditions/terms-and-conditions-of-sales/) or other applicable terms. This document does not alter or expand the applicable warranties provided by Diodes. Diodes does not warrant or accept any liability whatsoever in respect of any products purchased through unauthorized sales channel.

6. Diodes' products and technology may not be used for or incorporated into any products or systems whose manufacture, use or sale is prohibited under any applicable laws and regulations. Should customers or users use Diodes' products in contravention of any applicable laws or regulations, or for any unintended or unauthorized application, customers and users will (a) be solely responsible for any damages, losses or penalties arising in connection therewith or as a result thereof, and (b) indemnify and hold Diodes and its representatives and agents harmless against any and all claims, damages, expenses, and attorney fees arising out of, directly or indirectly, any claim relating to any noncompliance with the applicable laws and regulations, as well as any unintended or unauthorized application.

7. While efforts have been made to ensure the information contained in this document is accurate, complete and current, it may contain technical inaccuracies, omissions and typographical errors. Diodes does not warrant that information contained in this document is error-free and Diodes is under no obligation to update or otherwise correct this information. Notwithstanding the foregoing, Diodes reserves the right to make modifications, enhancements, improvements, corrections or other changes without further notice to this document and any product described herein. This document is written in English but may be translated into multiple languages for reference. Only the English version of this document is the final and determinative format released by Diodes.

8. Any unauthorized copying, modification, distribution, transmission, display or other use of this document (or any portion hereof) is prohibited. Diodes assumes no responsibility for any losses incurred by the customers or users or any third parties arising from any such unauthorized use.

9. This Notice may be periodically updated with the most recent version available at https://www.diodes.com/about/company/terms-and-conditions/important-notice

The Diodes logo is a registered trademark of Diodes Incorporated in the United States and other countries.
DIODES is a trademark of Diodes Incorporated in the United States and other countries.
All other trademarks are the property of their respective owners.
© 2023 Diodes Incorporated. All Rights Reserved.

www.diodes.com

NOT RECOMMENDED FOR NEW DESIGN

© 2023 Copyright Diodes Incorporated. All Rights Reserved.

ENTEGRECİ

Bu belge www.entegreci.com üzerinden sunulmaktadır.

Elektronik komponent tedarikinde Entegreci

Entegreci, Eskişehir merkezli, Türkiye geneline satış yapan bir elektronik komponent mağazasıdır. Entegreler (IC), mikrodenetleyiciler, transistörler, diyotlar, pasif elemanlar, konnektörler, modüller ve geliştirme kartları tek adetten seri üretim adetlerine kadar satılır. Ürün sayfalarında güncel stok durumunu, fiyatı ve datasheet bağlantısını bulabilirsiniz.

Parça koduyla arama

Üretici parça numarasını yazın; stok ve fiyatı hemen görün.

www.entegreci.com

Ürün kategorileri

Entegreden kapasitöre tüm elektronik komponent kategorileri.

Kategorilere göz atın

Üreticiler

Aradığınız üreticinin ürünlerini tek sayfada inceleyin.

Üreticileri görün

Toplu alım ve teklif

Listede olmayan ya da yüksek adetli parçalar için teklif isteyin.

Teklif isteyin

www.entegreci.com | **destek@entegreci.com** | **0850 305 90 34**

Entegreci is an online electronic components store based in Türkiye. Search by manufacturer part number to see stock, prices and datasheets for integrated circuits, microcontrollers, transistors, passive components and connectors, or request a quote for parts that are not listed.

Bu sayfa Entegreci tarafından eklenmiştir. Belgenin önceki sayfaları asıl yayıncısına aittir ve içeriği değiştirilmemiştir; en güncel sürüm için belgenin yayıncısına başvurun.