NOT RECOMMENDED FOR NEW DESIGN
USE AP7375

Lead-free Green

AP7370

WIDE INPUT VOLTAGE RANGE, 300mA ULDO REGULATOR

Description

The AP7370 series is a positive voltage regulator IC.

The AP7370 has features of wide input voltage range, high accuracy, low dropout voltage, current limit, reverse current protection, and ultra-low quiescent current which make it ideal for use in various USB and portable devices and instrument application.

The IC consists of a voltage reference, an error amplifier, a resistor network for setting output voltage, a current limit circuit for current protection, and a chip enable circuit.

The AP7370 is available in 1.2V, 1.5V, 1.8V, 2.8V, 3.0V, 3.3V, 3.6V and 5.0V fixed output voltage versions.

The AP7370 is available in space-saving SOT23, SOT25, SOT89 and U-DFN2020-6 (Type C) packages.

Features

- Wide Input Voltage Range: Up to 18V
- Low Dropout Voltage: V_{DROP} = 500mV @ I_{OUT} = 100mA
- Low Ground Current
- High Output Voltage Accuracy
- Compatible with Low ESR Ceramic Capacitor
- Excellent Line/Load Regulation
- Thermal Shutdown Function
- Short Current Protection
- Reverse Current Protection

Applications

- Battery-Powered Equipment
- Laptop, Palmtops, Notebook Computers
- Portable Information Appliances
- Metering
- Weighing Scales

Pin Assignments

(Top View)

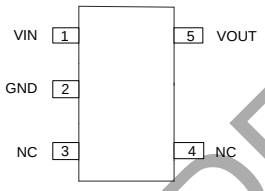

SOT25 (W5)

(Top View)

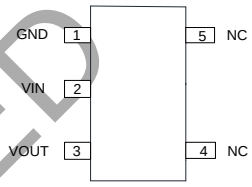

SOT25 (WR)

(Top View)

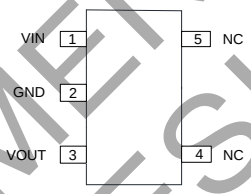

SOT25 (WW)

(Top View)

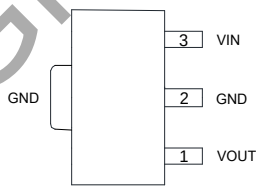

SOT89

(Top View)

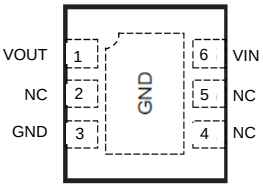

U-DFN2020-6 (Type C)

(Top View)

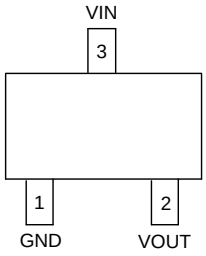

SOT23

Notes:
1. No purposely added lead. Fully EU Directive 2002/95/EC (RoHS), 2011/65/EU (RoHS 2) & 2015/863/EU (RoHS 3) compliant.
2. See https://www.diodes.com/quality/lead-free/ for more information about Diodes Incorporated's definitions of Halogen- and Antimony-free, "Green" and Lead-free.
3. Halogen- and Antimony-free "Green" products are defined as those which contain <900ppm bromine, <900ppm chlorine (<1500ppm total Br + Cl) and <1000ppm antimony compounds.

Typical Applications Circuit

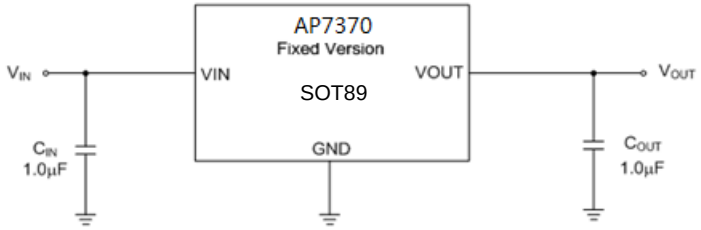

NOT RECOMMENDED FOR NEW DESIGN

© 2024 Copyright Diodes Incorporated. All Rights Reserved.

Pin Descriptions

Pin Number						Pin Name	Function
SOT25 (W5)	SOT25 (WR)	SOT25 (WW)	SOT89	SOT23	U-DFN2020-6 (Type C)		
1	2	1	3	3	6	VIN	Input voltage
2	1	2	2	1	3	GND	Ground
3, 4	4, 5	4, 5	—	—	2, 4, 5	NC	Not connected for fixed version
5	3	3	1	2	1	VOUT	Regulated output voltage
—	—	—	—	—	EP	GND	Ground

NOT RECOMMENDED FOR NEW DESIGN

Absolute Maximum Ratings

Symbol	Parameter	Rating		Unit
V_{IN}	Supply Input Voltage	20		V
I_{OUT}	Output Current	500		mA
T_{LEAD}	Lead Temperature (Soldering, 10s)	+260		°C
T_J	Operating Junction Temperature	+150		°C
θ_{JA}	Thermal Resistance (Junction to Ambient)	SOT23	205	°C/W
		SOT25	155	
		SOT89	126	
		U-DFN2020-6 (Type C)	54	
θ_{JC}	Thermal Resistance (Junction to Case)	SOT23	37	°C/W
		SOT25	23	
		SOT89	26	
		U-DFN2020-6 (Type C)	9.5	
T_{STG}	Storage Temperature Range	-65 to +150		°C
—	ESD (Change Device Model))	1500		V
—	ESD (Human Body Model)	6000		V

Recommended Operating Conditions

Symbol	Parameter	Min	Max	Unit
V_{IN}	Supply Input Voltage	3.2	18	V
T_J	Operating Junction Temperature	-40	+125	°C

© 2024 Copyright Diodes Incorporated. All Rights Reserved.

Electrical Characteristics (@T_A = -40°C to +85°C, V_{IN} = $V_{OUT(Typ)}$ + 1V or 2.7V (whichever is greater), I_{OUT} = 10mA, and C_{IN} = C_{OUT} = 1.0µF ceramic, unless otherwise noted. Typical values are at T_A = +25°C.)

Symbol	Parameter	Test Conditions	Min	Typ	Max	Unit
V_{OUT}	Output Voltage	V_{OUT} > 2.5V	V_{OUT} × 99%	V_{OUT}	V_{OUT} × 101%	V
		V_{OUT} ≤ 2.5V	V_{OUT} × 98%	V_{OUT}	V_{OUT} × 102%	V
V_{IN}	Input Voltage	—	3.2	—	18	V
I_{LIMIT}	Current Limit (Note 4)	V_{OUT} > 2.5V, V_{OUT1} = 98% × V_{OUT}	350	—	—	mA
		V_{OUT} ≤ 2.5V, V_{OUT1} = 98% × V_{OUT}	200	—	—	mA
$\Delta V_{OUT}/\Delta V_{IN}/V_{OUT}$	Line Regulation	($V_{OUT(Nom)}$ + 1V, 3.2V) ≤ V_{IN} ≤ 18V, I_{OUT} = 10mA	—	0.05	—	%/V
$\Delta V_{OUT}/V_{OUT}$	Load Regulation	V_{OUT} > 2.5V, V_{IN} = V_{OUT} + 2V, 1mA ≤ I_{OUT} ≤ 300mA	—	0.5	—	%
		V_{OUT} ≤ 2.5V, V_{IN} = V_{OUT} + 3V, 1mA ≤ I_{OUT} ≤ 150mA	—	0.5	—	%
V_{DROP}	Dropout Voltage (Notes 5, 6)	3.0V ≤ V_{OUT} < 5.0V, I_{OUT} = 100mA	—	500	600	mV
		V_{OUT} = 5.0V, I_{OUT} = 100mA	—	450	550	mV
I_{GND}	Ground Current	I_{OUT} = 0A	—	1.5	2.5	µA
		V_{OUT} > 2.5V, I_{OUT} = 300mA	—	250	300	
		V_{OUT} ≤ 2.5V, I_{OUT} = 150mA				
$\Delta V_{OUT}/(V_{OUT} \times \Delta T)$	Output Voltage Temperature Coefficient	I_{OUT} = 100µA, -40°C ≤ T_J ≤ +125°C	—	±100	—	ppm/°C
T_{OTSD}	Thermal Shutdown Temperature	—	—	+160	—	°C
T_{HYOTSD}	Thermal Shutdown Hysteresis	—	—	+20	—	°C

Notes: 4. Measured with V_{IN} = V_{OUT} + 3V for V_{OUT} ≤ 2.5V. Measured with V_{IN} = V_{OUT} + 2.5V for V_{OUT} > 2.5V.

5. V_{DROP} is measured with V_{IN} = 0.98 × $V_{OUT(Nom)}$.

6. Dropout is only valid when V_{OUT} ≥ 2.8V because of the minimum input voltage limits.

NOT RECOMMENDED FOR NEW DESIGN

© 2024 Copyright Diodes Incorporated. All Rights Reserved.

Performance Characteristics

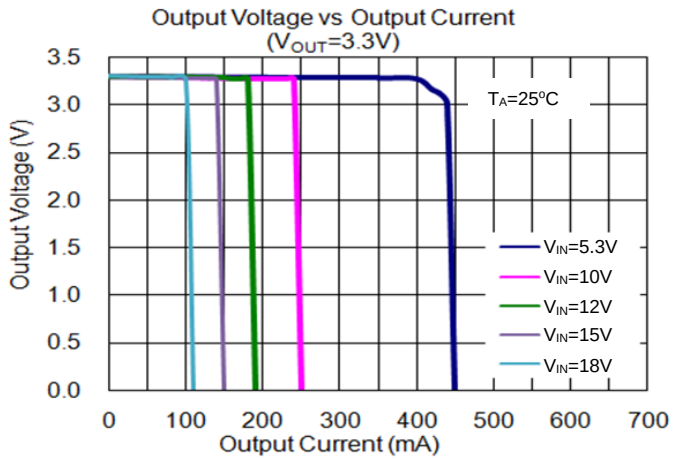

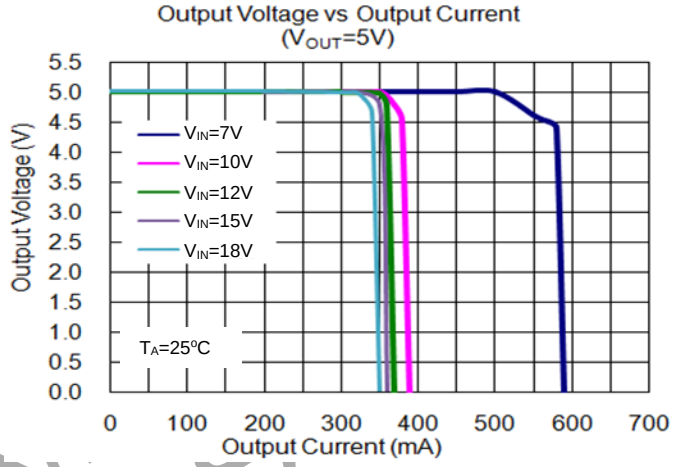

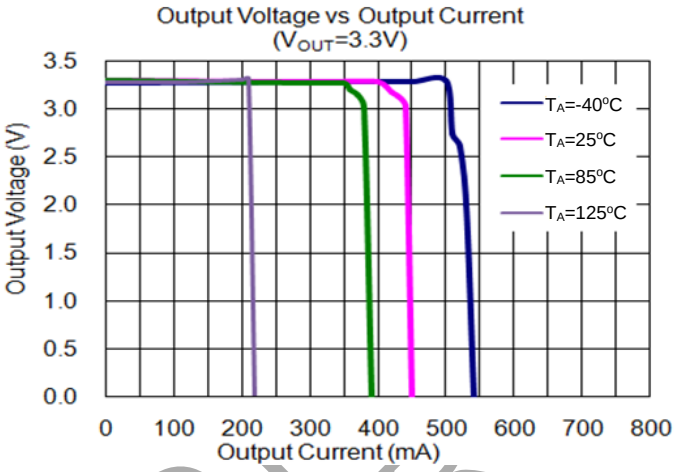

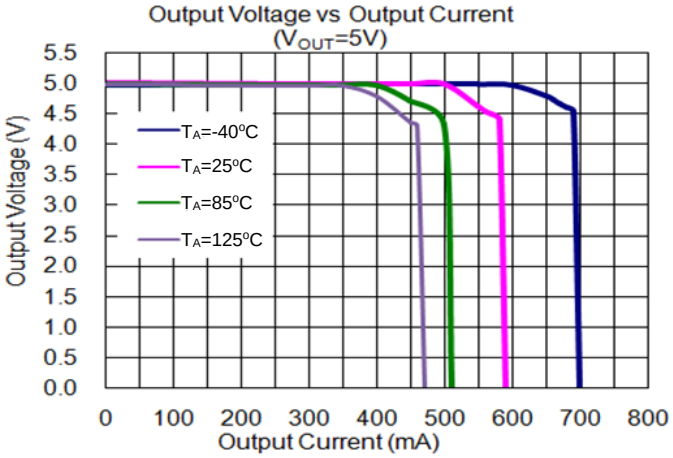

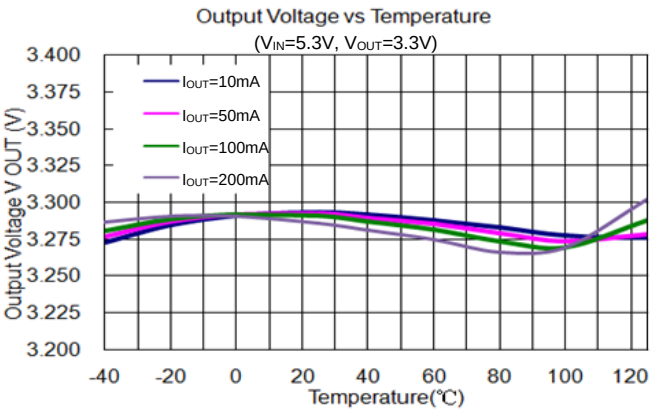

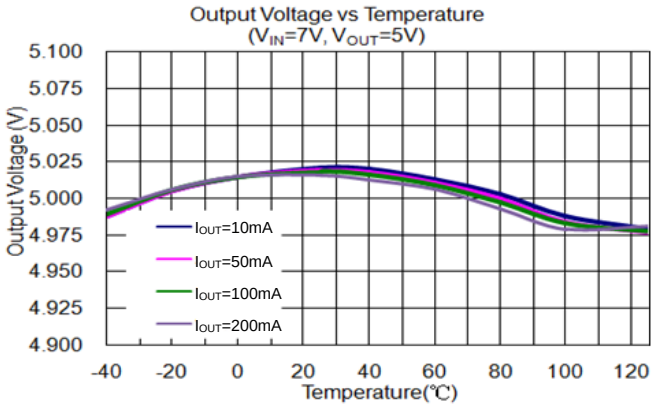

© 2024 Copyright Diodes Incorporated. All Rights Reserved.

Performance Characteristics (continued)

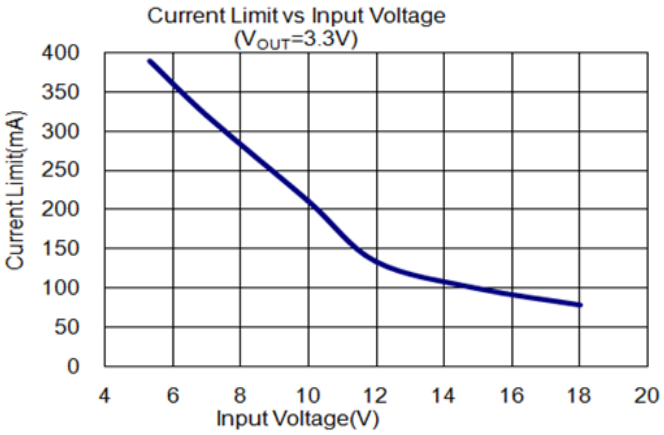

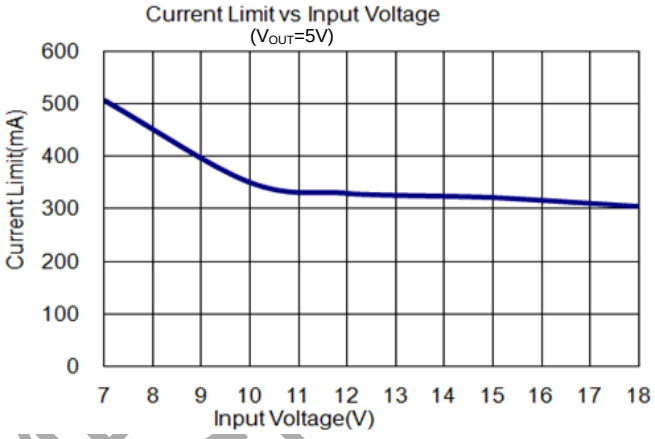

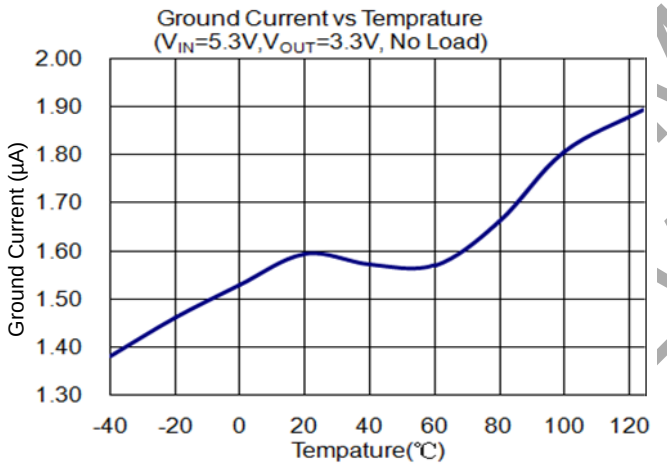

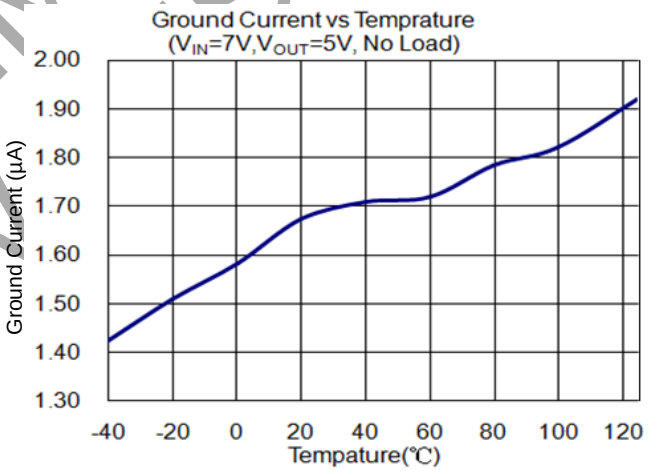

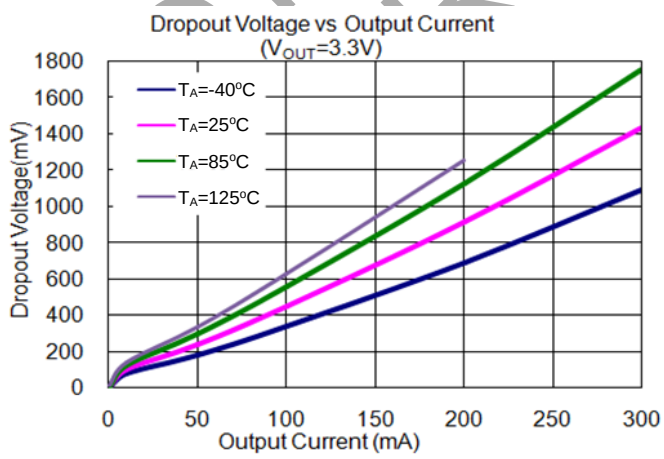

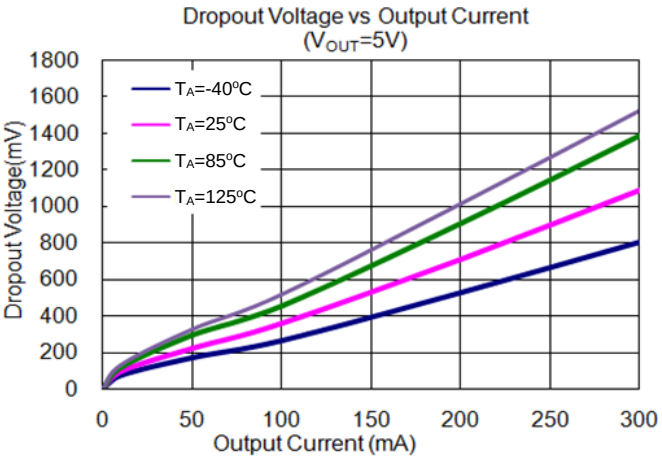

© 2024 Copyright Diodes Incorporated. All Rights Reserved.

Performance Characteristics (continued)

Dropout Voltage vs Temperature
(V_{OUT}=3.3V)

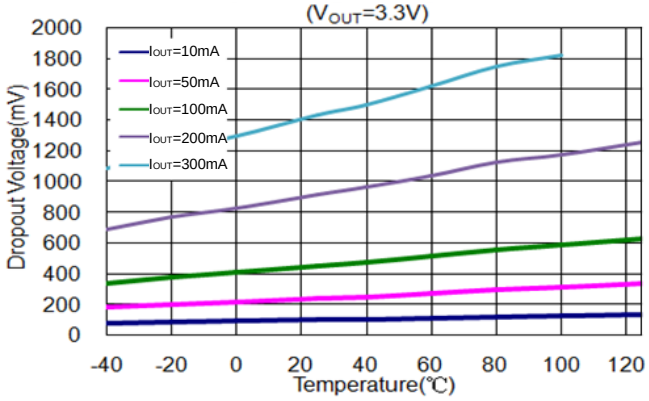

Dropout Voltage vs Temperature
(V_{OUT}=5V)

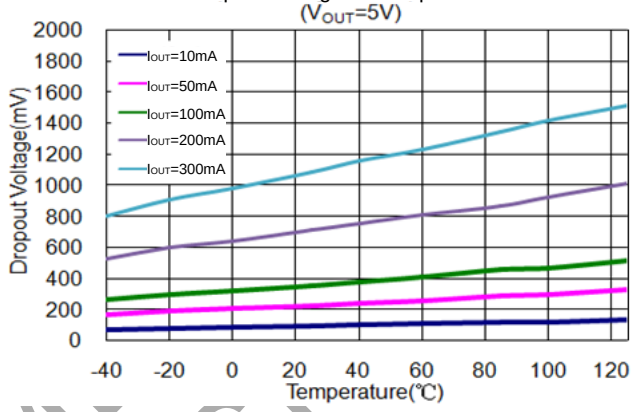

Output Reverse Current vs Output Voltage
(V_{IN}=4.3V, V_{OUT}=3.3V)

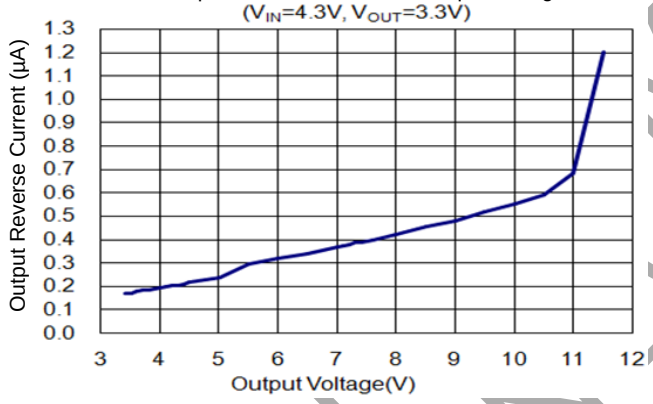

Output Reverse Current vs Output Voltage
(V_{IN}=6V, V_{OUT}=5V)

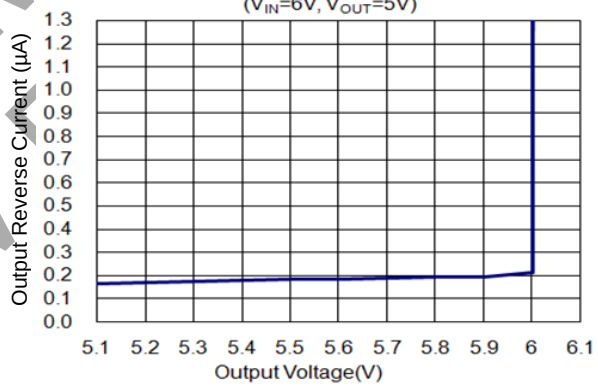

Ground Current vs Input Voltage
(V_{OUT}=3.3V, No load)

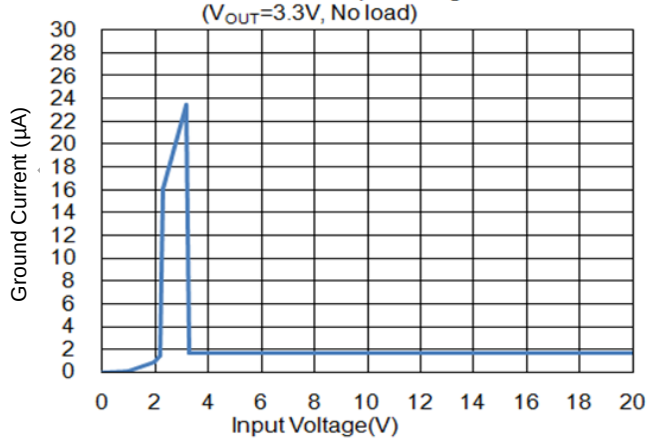

Ground Current vs Input Voltage
(V_{OUT}=5V, No load)

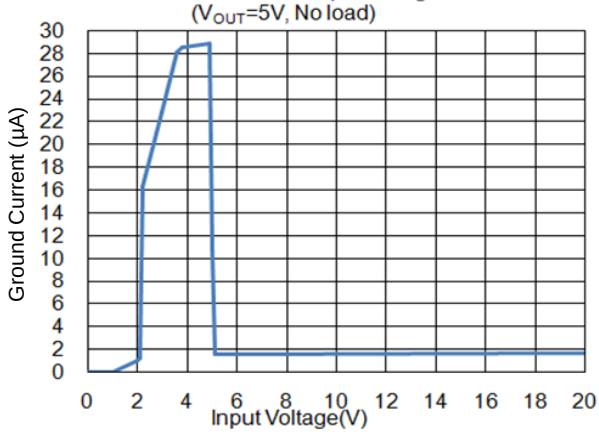

© 2024 Copyright Diodes Incorporated. All Rights Reserved.

Performance Characteristics (continued)

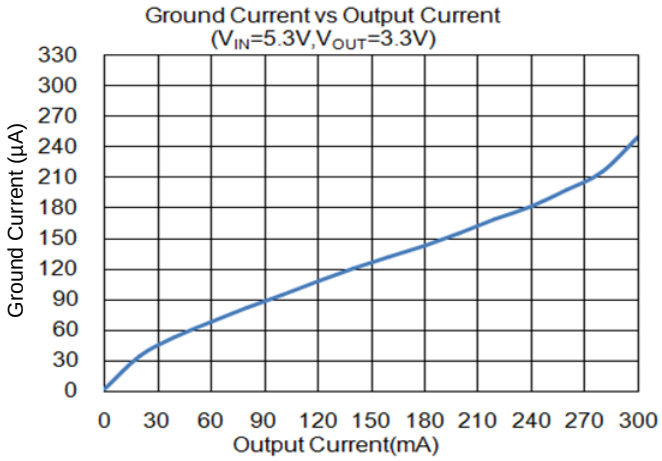

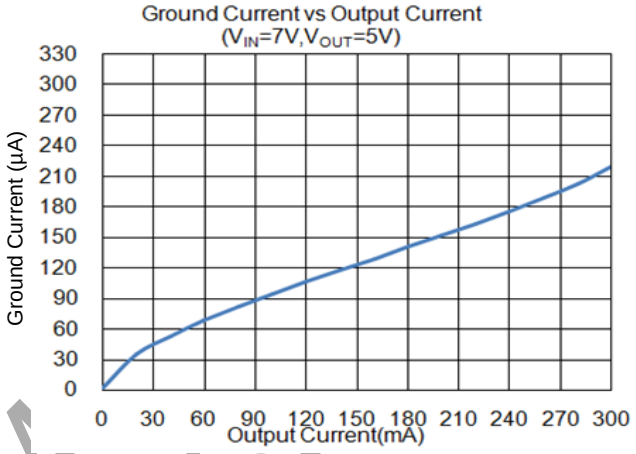

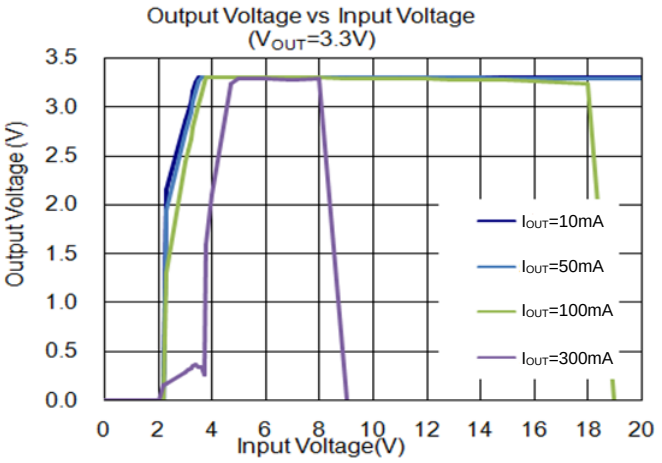

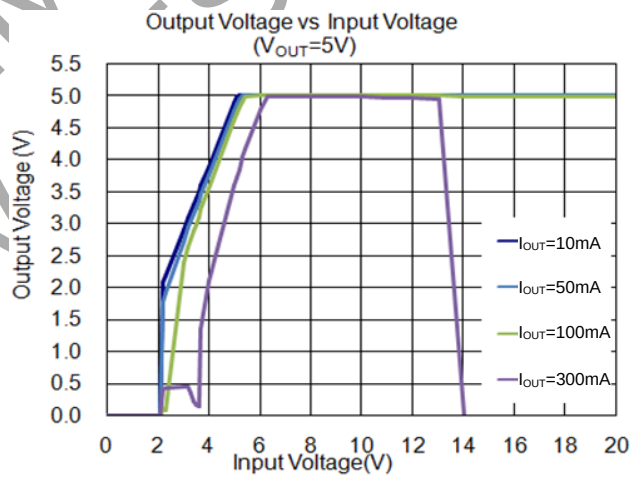

Load Transient
(V_{IN} = 5.3V, V_{OUT} = 3.3V, Load = 50mA to 100mA, T_A = +25°C)

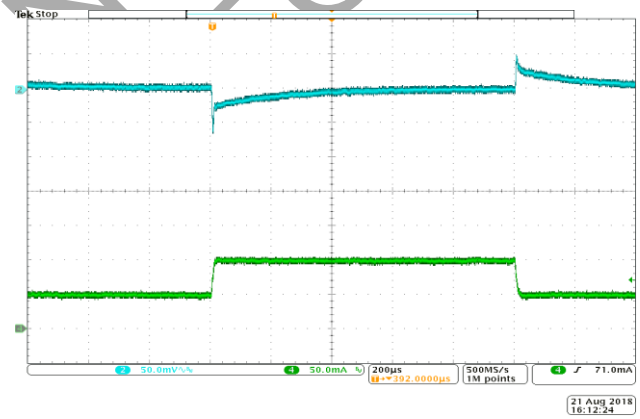

Load Transient
(V_{IN} = 7V, V_{OUT} = 5V, Load = 50mA to 100mA, T_A = +25°C)

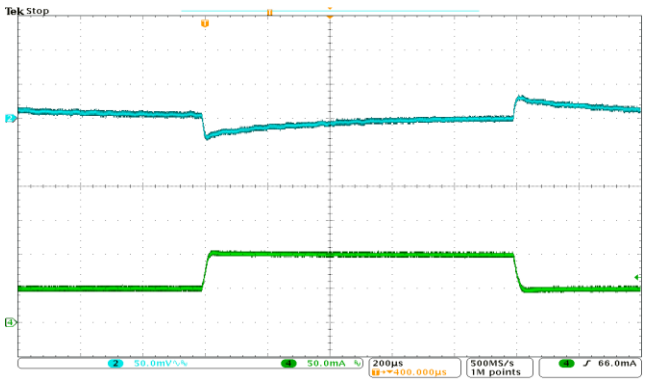

NOT FOR NEW DESIGNS

© 2024 Copyright Diodes Incorporated. All Rights Reserved.

Performance Characteristics (continued)

Load Transient

V_{IN} = 5.3V, V_{OUT} = 3.3V, Load = 150mA to 300mA, T_A = +25°C

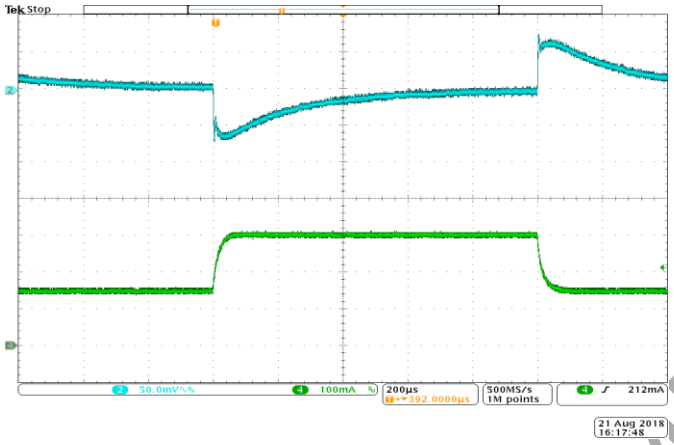

Load Transient

(V_{IN} = 7V, V_{OUT} = 5V, Load = 150mA to 300mA, T_A = +25°C)

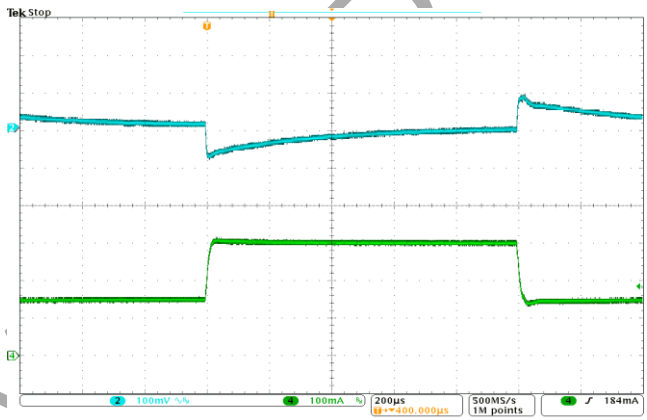

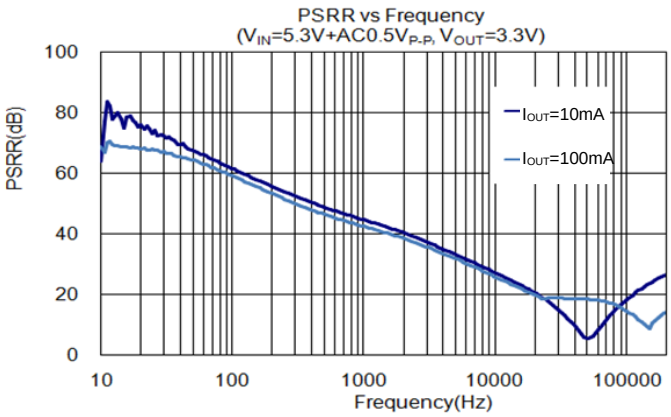

NOT FOR NEW DESIGN

© 2024 Copyright Diodes Incorporated. All Rights Reserved.

Ordering Information

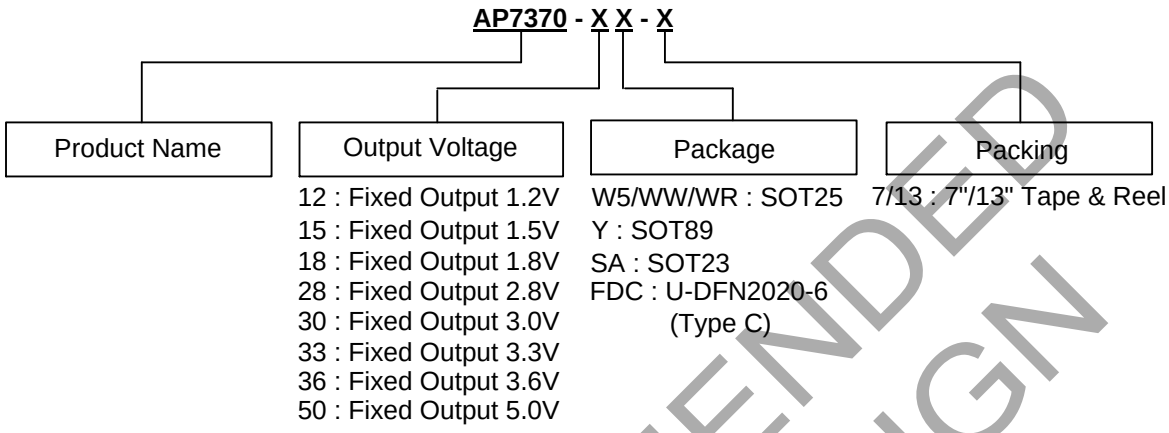

Part Number	Package Code	Package	7"/13" Tape and Reel	
			Quantity	Part Number Suffix
AP7370-XXW5-7	W5	SOT25	3000/Tape & Reel	-7
AP7370-XXWR-7	WR	SOT25	3000/Tape & Reel	-7
AP7370-XXWW-7	WW	SOT25	3000/Tape & Reel	-7
AP7370-XXY-13	Y	SOT89	2500/Tape & Reel	-13
AP7370-XXSA-7	SA	SOT23	3000/Tape & Reel	-7
AP7370-XXFDC-7	FDC	U-DFN2020-6 (Type C)	3000/Tape & Reel	-7

NOT RECOMMENDED FOR NEW DESIGN

© 2024 Copyright Diodes Incorporated. All Rights Reserved.

Marking Information

(1) SOT25

(Top View)

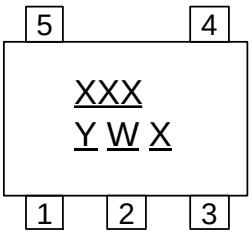

XXX : Identification Code
Y : Year 0 to 9
W : Week : A to Z : 1 to 26 week;
a to z : 27 to 52 week; z represents 52 and 53 week
X : Internal Code

Part Number	Package	Identification Code
AP7370-12W5-7	SOT25	B8A
AP7370-15W5-7	SOT25	B8F
AP7370-18W5-7	SOT25	B8B
AP7370-28W5-7	SOT25	B8G
AP7370-30W5-7	SOT25	B8C
AP7370-33W5-7	SOT25	B8D
AP7370-36W5-7	SOT25	B8E
AP7370-50W5-7	SOT25	B8H
AP7370-12WR-7	SOT25	B8J
AP7370-15WR-7	SOT25	B8R
AP7370-18WR-7	SOT25	B8K
AP7370-28WR-7	SOT25	B8S
AP7370-30WR-7	SOT25	B8M
AP7370-33WR-7	SOT25	B8N
AP7370-36WR-7	SOT25	B8P
AP7370-50WR-7	SOT25	B8T
AP7370-12WW-7	SOT25	B8U
AP7370-15WW-7	SOT25	B8Z
AP7370-18WW-7	SOT25	B8V
AP7370-28WW-7	SOT25	B82
AP7370-30WW-7	SOT25	B8W
AP7370-33WW-7	SOT25	B8X
AP7370-36WW-7	SOT25	B8Y
AP7370-50WW-7	SOT25	B83

NOT RECOMMENDED FOR NEW DESIGN

© 2024 Copyright Diodes Incorporated. All Rights Reserved.

Marking Information (continued)

(2) SOT89

(Top View)

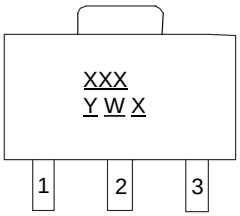

XXX : Identification Code
Y : Year : 0 ~ 9
W : Week : A ~ Z : 1 ~ 26 Week;
a ~ z : 27 ~ 52 Week;
z Represents 52 and 53 Week
X : Internal Code

Part Number	Package	Identification Code
AP7370-12Y-13	SOT89	B8A
AP7370-15Y-13	SOT89	B8F
AP7370-18Y-13	SOT89	B8B
AP7370-28Y-13	SOT89	B8G
AP7370-30Y-13	SOT89	B8C
AP7370-33Y-13	SOT89	B8D
AP7370-36Y-13	SOT89	B8E
AP7370-50Y-13	SOT89	B8H

(3) SOT23

(Top View)

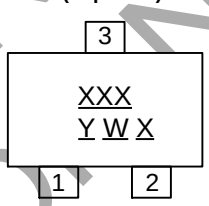

XXX : Identification Code
Y : Year 0 to 9
W : Week : A to Z : 1 to 26 week;
a to z : 27 to 52 week; z represents 52 and 53 week
X : Internal Code

Part Number	Package	Identification Code
AP7370-12SA-7	SOT23	B8J
AP7370-15SA-7	SOT23	B8R
AP7370-18SA-7	SOT23	B8K
AP7370-28SA-7	SOT23	B8S
AP7370-30SA-7	SOT23	B8M
AP7370-33SA-7	SOT23	B8N
AP7370-36SA-7	SOT23	B8P
AP7370-50SA-7	SOT23	B8T

NOT RECOMMENDED FOR NEW DESIGN

© 2024 Copyright Diodes Incorporated. All Rights Reserved.

Ordering Information (continued)

(4) U-DFN2020-6 (Type C)

(Top View)

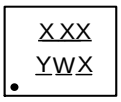

XXX : Identification Code
Y : Year : 0~9
W : Week : A~Z : 1~26 week;
a~z : 27~52 week; z represents
52 and 53 week
X : Internal Code

Device	Package	Identification Code
AP7370-12FDC-7	U-DFN2020-6 (Type C)	B8U
AP7370-15FDC-7	U-DFN2020-6 (Type C)	B8Z
AP7370-18FDC-7	U-DFN2020-6 (Type C)	B8V
AP7370-28FDC-7	U-DFN2020-6 (Type C)	B82
AP7370-30FDC-7	U-DFN2020-6 (Type C)	B8W
AP7370-33FDC-7	U-DFN2020-6 (Type C)	B8X
AP7370-36FDC-7	U-DFN2020-6 (Type C)	B8Y
AP7370-50FDC-7	U-DFN2020-6 (Type C)	B83

NOT RECOMMENDED FOR NEW DESIGN

© 2024 Copyright Diodes Incorporated. All Rights Reserved.

Package Outline Dimensions

Please see http://www.diodes.com/package-outlines.html for the latest version.

(1) Package Type: SOT23

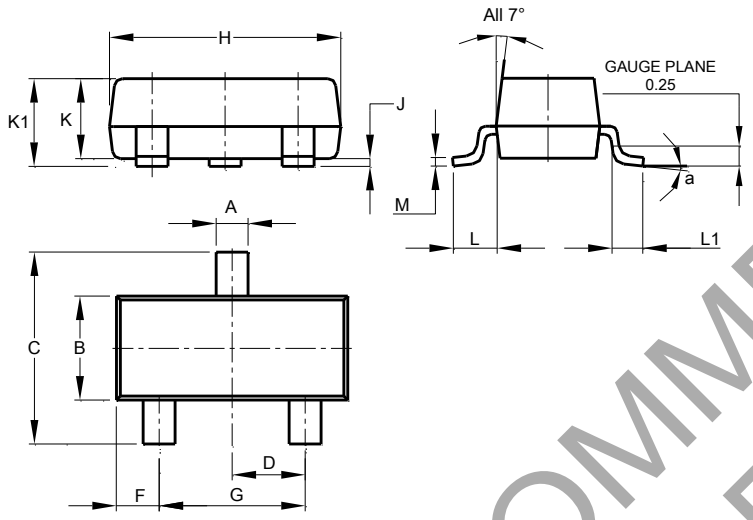

SOT23			
Dim	**Min**	**Max**	**Typ**
A	0.37	0.51	0.40
B	1.20	1.40	1.30
C	2.30	2.50	2.40
D	0.89	1.03	0.915
F	0.45	0.60	0.535
G	1.78	2.05	1.83
H	2.80	3.00	2.90
J	0.013	0.10	0.05
K	0.890	1.00	0.975
K1	0.903	1.10	1.025
L	0.45	0.61	0.55
L1	0.25	0.55	0.40
M	0.085	0.150	0.110
a	0°	8°	--
All Dimensions in mm			

(2) Package Type: SOT25

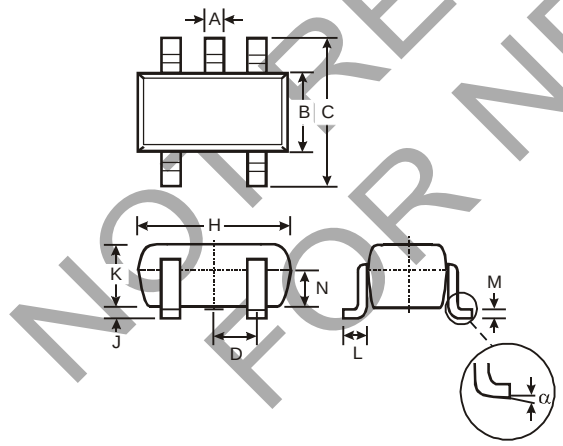

SOT25			
Dim	**Min**	**Max**	**Typ**
A	0.35	0.50	0.38
B	1.50	1.70	1.60
C	2.70	3.00	2.80
D	-	-	0.95
H	2.90	3.10	3.00
J	0.013	0.10	0.05
K	1.00	1.30	1.10
L	0.35	0.55	0.40
M	0.10	0.20	0.15
N	0.70	0.80	0.75
α	0°	8°	-
All Dimensions in mm			

NOT RECOMMENDED FOR NEW DESIGN

© 2024 Copyright Diodes Incorporated. All Rights Reserved.

Package Outline Dimensions (continued)

Please see http://www.diodes.com/package-outlines.html for the latest version.

(3) Pakcage Type: SOT89

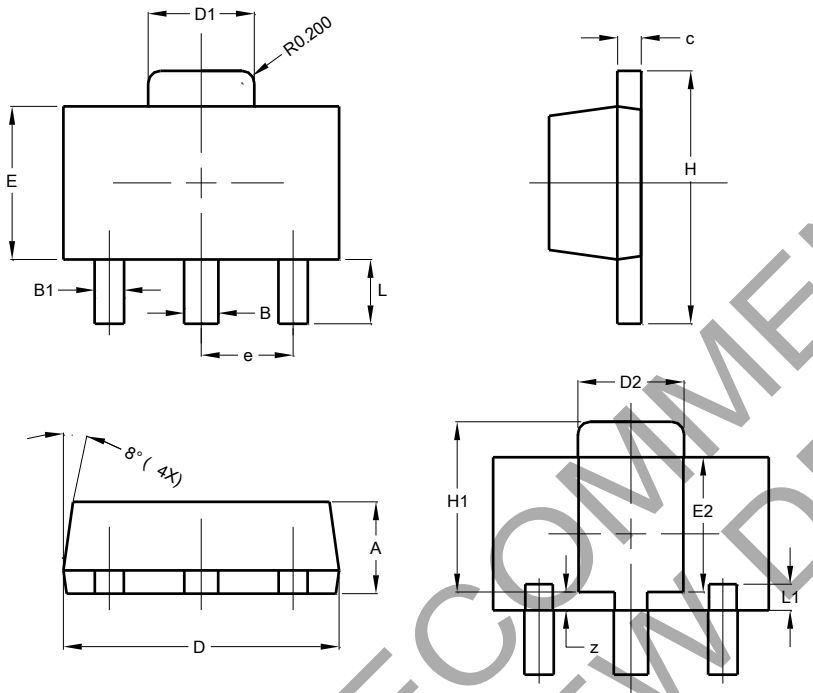

SOT89			
Dim	**Min**	**Max**	**Typ**
A	1.40	1.60	1.50
B	0.50	0.62	0.56
B1	0.42	0.54	0.48
c	0.35	0.43	0.38
D	4.40	4.60	4.50
D1	1.62	1.83	1.733
D2	1.61	1.81	1.71
E	2.40	2.60	2.50
E2	2.05	2.35	2.20
e	-	-	1.50
H	3.95	4.25	4.10
H1	2.63	2.93	2.78
L	0.90	1.20	1.05
L1	0.327	0.527	0.427
z	0.20	0.40	0.30
All Dimensions in mm			

(4) Package Type: U-DFN2020-6 (Type C)

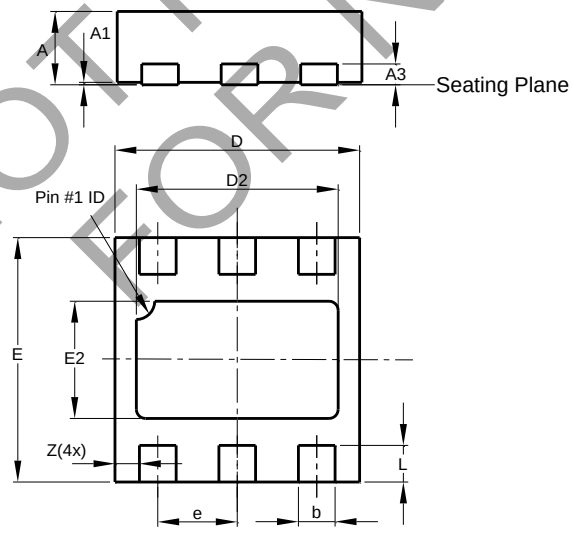

U-DFN2020-6 Type C			
Dim	**Min**	**Max**	**Typ**
A	0.57	0.63	0.60
A1	0.00	0.05	0.02
A3	—	—	0.15
b	0.25	0.35	0.30
D	1.95	2.075	2.00
D2	1.55	1.75	1.65
E	1.95	2.075	2.00
E2	0.86	1.06	0.96
e	—	—	0.65
L	0.25	0.35	0.30
Z	—	—	0.20
All Dimensions in mm			

NOT RECOMMENDED FOR NEW DESIGN

© 2024 Copyright Diodes Incorporated. All Rights Reserved.

Suggested Pad Layout

Please see http://www.diodes.com/package-outlines.html for the latest version.

(1) Package Type: SOT23

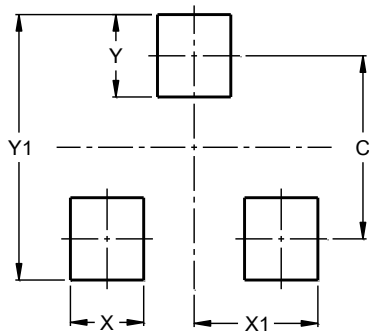

Dimensions	Value (in mm)
C	2.0
X	0.8
X1	1.35
Y	0.9
Y1	2.9

(2) Package Type: SOT25

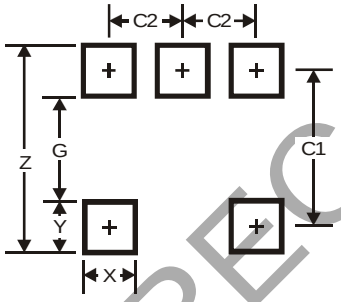

Dimensions	Value
Z	3.20
G	1.60
X	0.55
Y	0.80
C1	2.40
C2	0.95

(3) Package Type: SOT89

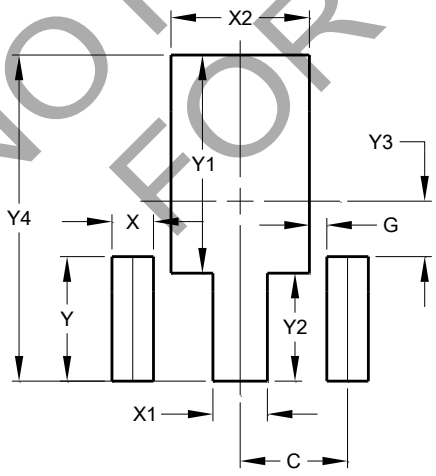

Dimensions	Value (in mm)
C	1.500
G	0.244
X	0.580
X1	0.760
X2	1.933
Y	1.730
Y1	3.030
Y2	1.500
Y3	0.770
Y4	4.530

NOT RECOMMENDED FOR NEW DESIGN

© 2024 Copyright Diodes Incorporated. All Rights Reserved.

Suggested Pad Layout (continued)

Please see http://www.diodes.com/package-outlines.html for the latest version.

(4) Package Type: U-DFN2020-6 (Type C)

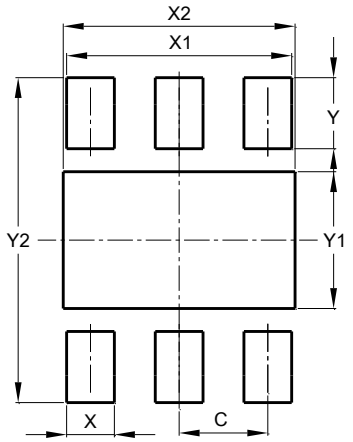

Dimensions	Value (in mm)
C	0.650
X	0.350
X1	1.650
X2	1.700
Y	0.525
Y1	1.010
Y2	2.400

NOT RECOMMENDED FOR NEW DESIGN

© 2024 Copyright Diodes Incorporated. All Rights Reserved.

IMPORTANT NOTICE

1. DIODES INCORPORATED (Diodes) AND ITS SUBSIDIARIES MAKE NO WARRANTY OF ANY KIND, EXPRESS OR IMPLIED, WITH REGARDS TO ANY INFORMATION CONTAINED IN THIS DOCUMENT, INCLUDING, BUT NOT LIMITED TO, THE IMPLIED WARRANTIES OF MERCHANTABILITY, FITNESS FOR A PARTICULAR PURPOSE OR NON-INFRINGEMENT OF THIRD PARTY INTELLECTUAL PROPERTY RIGHTS (AND THEIR EQUIVALENTS UNDER THE LAWS OF ANY JURISDICTION).

2. The Information contained herein is for informational purpose only and is provided only to illustrate the operation of Diodes' products described herein and application examples. Diodes does not assume any liability arising out of the application or use of this document or any product described herein. This document is intended for skilled and technically trained engineering customers and users who design with Diodes' products. Diodes' products may be used to facilitate safety-related applications; however, in all instances customers and users are responsible for (a) selecting the appropriate Diodes products for their applications, (b) evaluating the suitability of Diodes' products for their intended applications, (c) ensuring their applications, which incorporate Diodes' products, comply the applicable legal and regulatory requirements as well as safety and functional-safety related standards, and (d) ensuring they design with appropriate safeguards (including testing, validation, quality control techniques, redundancy, malfunction prevention, and appropriate treatment for aging degradation) to minimize the risks associated with their applications.

3. Diodes assumes no liability for any application-related information, support, assistance or feedback that may be provided by Diodes from time to time. Any customer or user of this document or products described herein will assume all risks and liabilities associated with such use, and will hold Diodes and all companies whose products are represented herein or on Diodes' websites, harmless against all damages and liabilities.

4. Products described herein may be covered by one or more United States, international or foreign patents and pending patent applications. Product names and markings noted herein may also be covered by one or more United States, international or foreign trademarks and trademark applications. Diodes does not convey any license under any of its intellectual property rights or the rights of any third parties (including third parties whose products and services may be described in this document or on Diodes' website) under this document.

5. Diodes' products are provided subject to Diodes' Standard Terms and Conditions of Sale (https://www.diodes.com/about/company/terms-and-conditions/terms-and-conditions-of-sales/) or other applicable terms. This document does not alter or expand the applicable warranties provided by Diodes. Diodes does not warrant or accept any liability whatsoever in respect of any products purchased through unauthorized sales channel.

6. Diodes' products and technology may not be used for or incorporated into any products or systems whose manufacture, use or sale is prohibited under any applicable laws and regulations. Should customers or users use Diodes' products in contravention of any applicable laws or regulations, or for any unintended or unauthorized application, customers and users will (a) be solely responsible for any damages, losses or penalties arising in connection therewith or as a result thereof, and (b) indemnify and hold Diodes and its representatives and agents harmless against any and all claims, damages, expenses, and attorney fees arising out of, directly or indirectly, any claim relating to any noncompliance with the applicable laws and regulations, as well as any unintended or unauthorized application.

7. While efforts have been made to ensure the information contained in this document is accurate, complete and current, it may contain technical inaccuracies, omissions and typographical errors. Diodes does not warrant that information contained in this document is error-free and Diodes is under no obligation to update or otherwise correct this information. Notwithstanding the foregoing, Diodes reserves the right to make modifications, enhancements, improvements, corrections or other changes without further notice to this document and any product described herein. This document is written in English but may be translated into multiple languages for reference. Only the English version of this document is the final and determinative format released by Diodes.

8. Any unauthorized copying, modification, distribution, transmission, display or other use of this document (or any portion hereof) is prohibited. Diodes assumes no responsibility for any losses incurred by the customers or users or any third parties arising from any such unauthorized use.

9. This Notice may be periodically updated with the most recent version available at https://www.diodes.com/about/company/terms-and-conditions/important-notice

The Diodes logo is a registered trademark of Diodes Incorporated in the United States and other countries.
All other trademarks are the property of their respective owners.
© 2024 Diodes Incorporated. All Rights Reserved.

www.diodes.com

NOT RECOMMENDED FOR NEW DESIGN

© 2024 Copyright Diodes Incorporated. All Rights Reserved.

ENTEGRECİ

Bu belge www.entegreci.com üzerinden sunulmaktadır.

Elektronik komponent tedarikinde Entegreci

Entegreci, Eskişehir merkezli, Türkiye geneline satış yapan bir elektronik komponent mağazasıdır. Entegreler (IC), mikrodenetleyiciler, transistörler, diyotlar, pasif elemanlar, konnektörler, modüller ve geliştirme kartları tek adetten seri üretim adetlerine kadar satılır. Ürün sayfalarında güncel stok durumunu, fiyatı ve datasheet bağlantısını bulabilirsiniz.

Parça koduyla arama

Üretici parça numarasını yazın; stok ve fiyatı hemen görün.

www.entegreci.com

Ürün kategorileri

Entegreden kapasitöre tüm elektronik komponent kategorileri.

Kategorilere göz atın

Üreticiler

Aradığınız üreticinin ürünlerini tek sayfada inceleyin.

Üreticileri görün

Toplu alım ve teklif

Listede olmayan ya da yüksek adetli parçalar için teklif isteyin.

Teklif isteyin

www.entegreci.com | **destek@entegreci.com** | **0850 305 90 34**

Entegreci is an online electronic components store based in Türkiye. Search by manufacturer part number to see stock, prices and datasheets for integrated circuits, microcontrollers, transistors, passive components and connectors, or request a quote for parts that are not listed.

Bu sayfa Entegreci tarafından eklenmiştir. Belgenin önceki sayfaları asıl yayıncısına aittir ve içeriği değiştirilmemiştir; en güncel sürüm için belgenin yayıncısına başvurun.