WIDE INPUT VOLTAGE RANGE, 150mA ULDO REGULATOR

Description

The AP7383 series is a positive voltage regulator IC.

The AP7383 features a wide-input voltage range, high-accuracy, low-dropout voltage, current limit and ultra-low quiescent current; all of which makes it ideal for use in various USB, portable devices, and instrument application.

The IC consists of a voltage reference, an error amplifier, a resistor network for setting output voltage, a current-limit circuit for current protection, and a chip enable circuit.

The AP7383 is available in 1.8V, 3.0V, 3.3V, 3.45V, 3.6V, 4.15V, 4.4V and 5.0V fixed-output voltage versions.

The AP7383 is available in space-saving SOT25, SOT89 and U-DFN2020-6 (Type C) packages.

Features

- Wide Input Voltage Range: Up to 30V
- Low Dropout Voltage: V_{DROP} = 500mV @ I_{OUT} = 50mA
- Low Ground Current
- High Output Voltage Accuracy
- Compatible with Low ESR Ceramic Capacitor
- Excellent Line/Load Regulation
- Thermal Shutdown Function
- **Totally Lead-Free & Fully RoHS Compliant (Notes 1 & 2)**
- **Halogen and Antimony Free. "Green" Device (Note 3)**
- **For automotive applications requiring specific change control (i.e. parts qualified to AEC-Q100/101/104/200, PPAP capable, and manufactured in IATF 16949 certified facilities), please contact us or your local Diodes representative. https://www.diodes.com/quality/product-definitions/**

Applications

- Battery-powered equipments
- Laptops, palmtops, notebook computers
- Portable information appliances

Pin Assignments

(Top View)

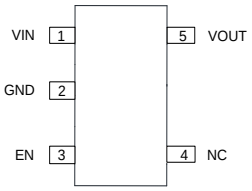

SOT25
(W5 Package)

(Top View)

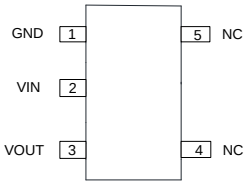

SOT25
(WR Package)

(Top View)

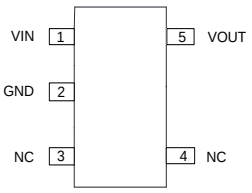

SOT25
(WW Package)

(Top View)

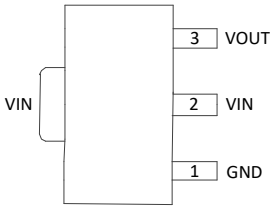

SOT89

(Top View)

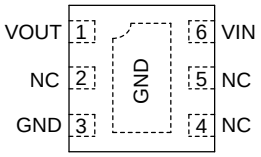

U-DFN2020-6 (Type C)

Notes:
1. No purposely added lead. Fully EU Directive 2002/95/EC (RoHS), 2011/65/EU (RoHS 2) & 2015/863/EU (RoHS 3) compliant.
2. See https://www.diodes.com/quality/lead-free/ for more information about Diodes Incorporated's definitions of Halogen- and Antimony-free, "Green" and Lead-free.
3. Halogen- and Antimony-free "Green" products are defined as those which contain <900ppm bromine, <900ppm chlorine (<1500ppm total Br + Cl) and <1000ppm antimony compounds.

© 2024 Copyright Diodes Incorporated. All Rights Reserved.

Typical Applications Circuit

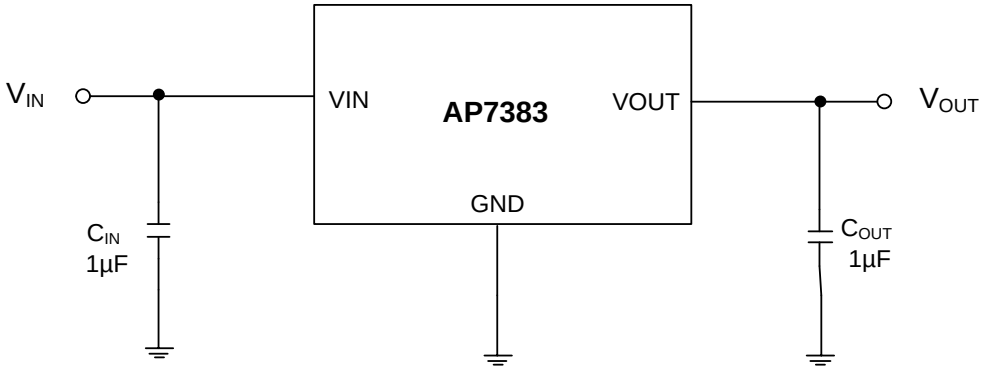

SOT89 / SOT25 (WR/WW Package) / U-DFN2020-6 (Type C)

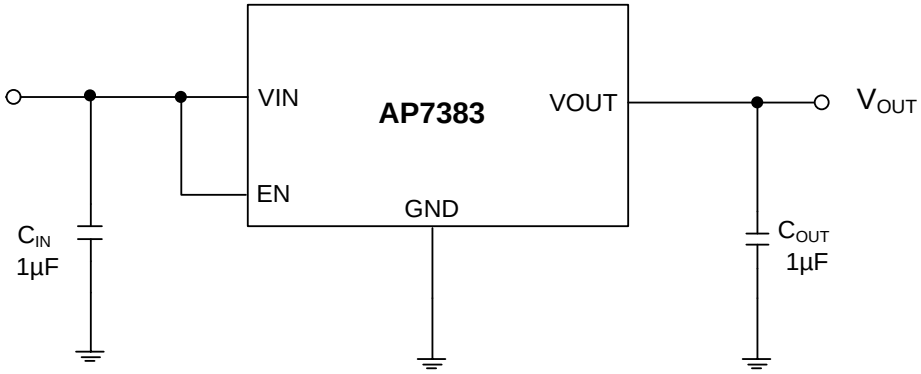

SOT25 (W5 Package)

Pin Descriptions

Pin Number					Pin Name	Function
SOT25 (W5 Package)	SOT25 (WR Package)	SOT25 (WW Package)	SOT89	U-DFN2020-6 (Type C)		
1	2	1	2	6	VIN	Input Voltage
2	1	2	1	3	GND	Ground
3	—	—	—	—	EN	Enable Input
4	4, 5	3, 4	—	2, 4, 5	NC	Not connected for fixed version. Not connected internally, recommend connection to GND to maximize PCB copper for thermal dissipation.
5	3	5	3	1	VOUT	Regulated Output Voltage

© 2024 Copyright Diodes Incorporated. All Rights Reserved.

Absolute Maximum Ratings (Note 4) (@ T_A = +25°C, unless otherwise specified.)

Symbol	Parameter	Rating		Unit
V_{IN}	Supply Input Voltage	33		V
V_{EN}	Enable Input Voltage	33		V
I_{OUT}	Output Current	200		mA
T_{LEAD}	Lead Temperature (Soldering, 10s)	+260		°C
T_J	Operating Junction Temperature	+150		°C
P_D	Power Dissipation	SOT25 (W5/WW Package)	518	mW
		SOT25 (WR Package)	602	
		SOT89	847	
		U-DFN2020-6 (Type C)	658	
θ_{JA}	Thermal Resistance (Junction to Ambient)	SOT25 (W5/WW Package)	193	°C/W
		SOT25 (WR Package)	166	
		SOT89	118	
		U-DFN2020-6 (Type C)	152	
θ_{JC}	Thermal Resistance (Junction to Case)	SOT25 (W5/WW Package)	68	°C/W
		SOT25 (WR Package)	26	
		SOT89	20	
		U-DFN2020-6 (Type C)	58	
T_{STG}	Storage Temperature Range	-65 to +150		°C
—	ESD (Machine Model)	250		V
—	ESD (Human Body Model)	2500		V

Note: 4. a). Stresses beyond those listed under Absolute Maximum Ratings can cause permanent damage to the device. These are stress ratings only, and functional operation of the device at these conditions is not implied. Exposure to absolute-maximum-rated conditions for extended periods can affect device reliability.
b). Ratings apply to ambient temperature at +25°C. The JEDEC High-K board design used to derive this data is a 2inch × 2inch multi-layer board with 1oz internal power and ground planes and 2oz copper traces on the top and bottom of the board.

Recommended Operating Conditions

Symbol	Parameter	Min	Max	Unit
V_{IN}	Supply Input Voltage	3.5	30	V
T_J	Operating Junction Temperature	-40	+125	°C

© 2024 Copyright Diodes Incorporated. All Rights Reserved.

Electrical Characteristics (@ V_{IN} = V_{OUT} + 2V, C_{IN} = 1.0µF, C_{OUT} = 1.0µF, Typical T_J = +25°C, unless otherwise specified.)

Symbol	Parameter	Test Conditions		Min	Typ	Max	Unit
V_{OUT}	Output Voltage	V_{IN} = V_{OUT} + 2V, I_{OUT} = 10mA Variation from Specified V_{OUT}		V_{OUT} × 99%	V_{OUT}	V_{OUT} × 101%	V
V_{IN}	Input Voltage	—		3.5	—	30	V
I_{LIMIT}	Current Limit	V_{IN} = V_{OUT} + 2V, V_{OUT1} = 98% × V_{OUT}		150	—	—	mA
$\Delta V_{OUT}/\Delta V_{IN}/V_{OUT}$	Line Regulation	V_{OUT} + 2V ≤ V_{IN} ≤ 30V, I_{OUT} = 10mA		—	0.05	—	%/V
$\Delta V_{OUT}/V_{OUT}$	Load Regulation	V_{IN} = V_{OUT} + 2V, 1mA ≤ I_{OUT} ≤ 150mA		—	0.5	—	%
V_{DROP}	Dropout Voltage	3.0V ≤ V_{OUT} < 5.0V	I_{OUT} = 50mA	—	360	580	mV
			I_{OUT} = 100mA	—	750	1000	mV
			I_{OUT} = 150mA	—	1050	1500	mV
		V_{OUT} = 5.0V	I_{OUT} = 50mA	—	250	500	mV
			I_{OUT} = 100mA	—	550	750	mV
			I_{OUT} = 150mA	—	750	1100	mV
I_{GND}	Ground Current	I_{OUT} = 0A		—	1.8	3.0	µA
		I_{OUT} = 150mA		—	1.8	3.0	
I_{STD}	Standby Current	V_{EN} in OFF Mode		—	0.01	—	µA
$\Delta V_{OUT}/(V_{OUT} x \Delta T)$	Output Voltage Temperature Coefficient	I_{OUT} = 100µA, -40°C ≤ T_J ≤ +125°C		—	±100	—	ppm/°C
I_{EN}	EN Pin Current	—		—	1	—	µA
—	EN “High” Voltage	EN Input Voltage “High”		2.0	—	—	V
—	EN “Low” Voltage	EN Input Voltage “Low”		—	—	0.4	V
T_{OTSD}	Thermal Shutdown Temperature	—		—	+160	—	°C
T_{HYOTSD}	Thermal Shutdown Hysteresis	—		—	+20	—	°C

© 2024 Copyright Diodes Incorporated. All Rights Reserved.

Performance Characteristics

Output Voltage vs. Input Voltage @-40°C

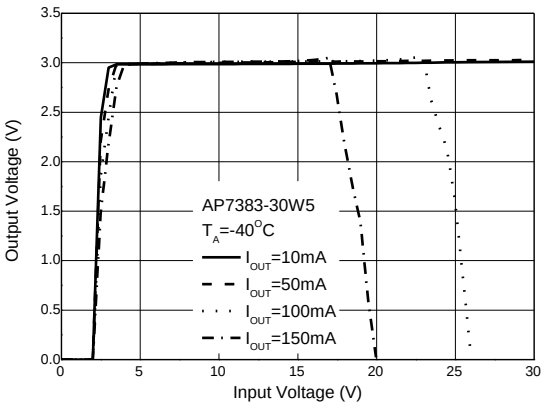

Output Voltage vs. Input Voltage @+25°C

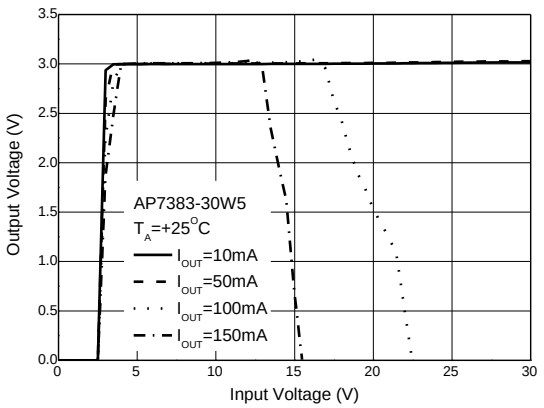

Output Voltage vs. Input Voltage @+85°C

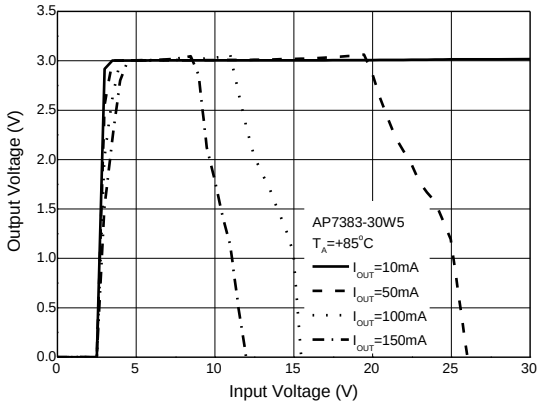

Output Voltage vs. Output Current

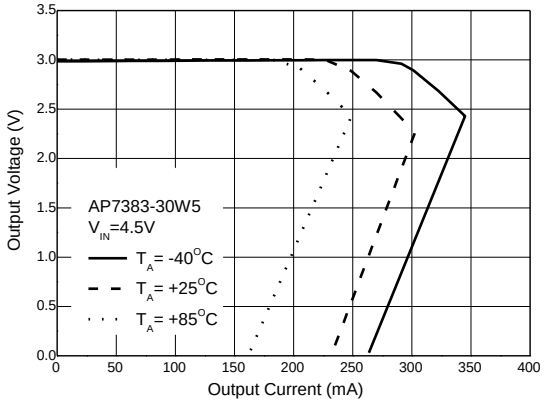

Output Voltage vs. Temperature

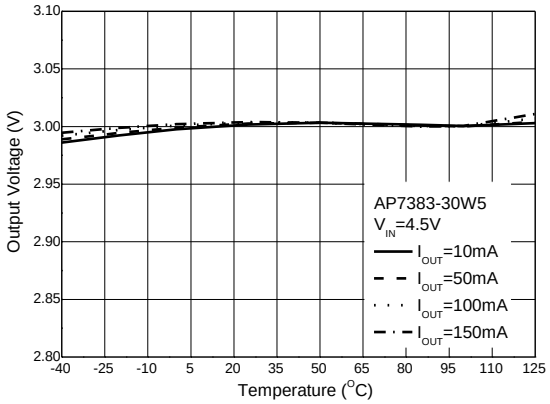

Output Voltage vs. Output Current

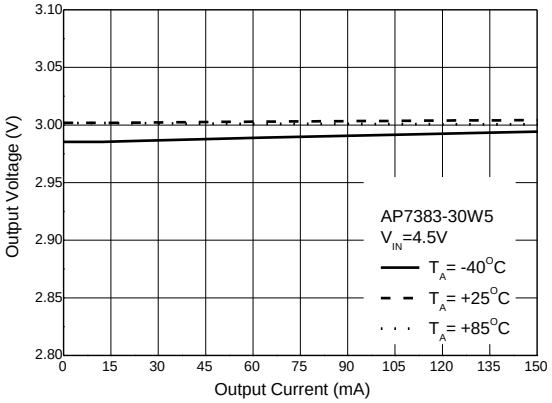

© 2024 Copyright Diodes Incorporated. All Rights Reserved.

Performance Characteristics (continued)

Dropout Voltage vs. Output Current

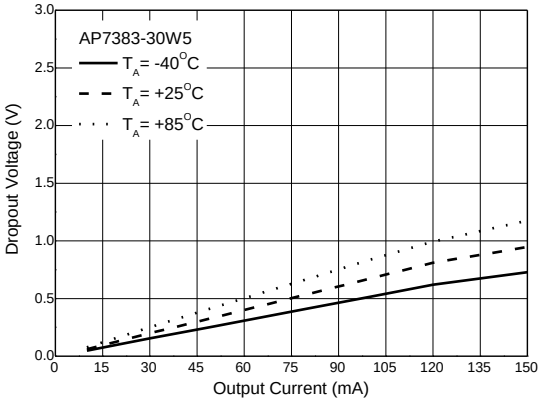

Dropout Voltage vs. Temperature

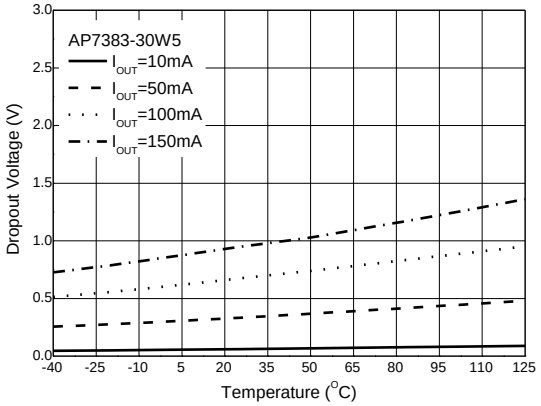

I_{GND} vs. Input Voltage

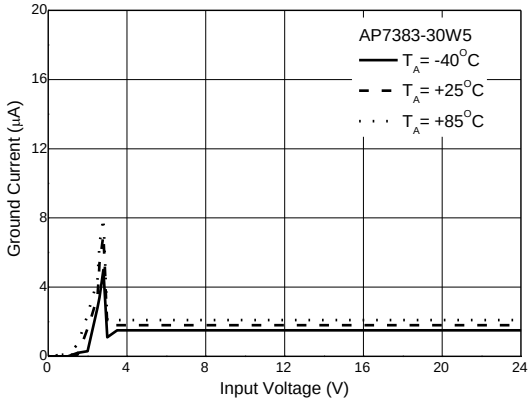

I_{GND} vs. Output Current

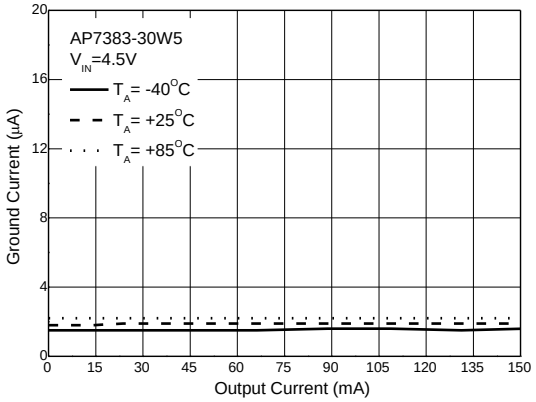

I_{GND} vs Temperature

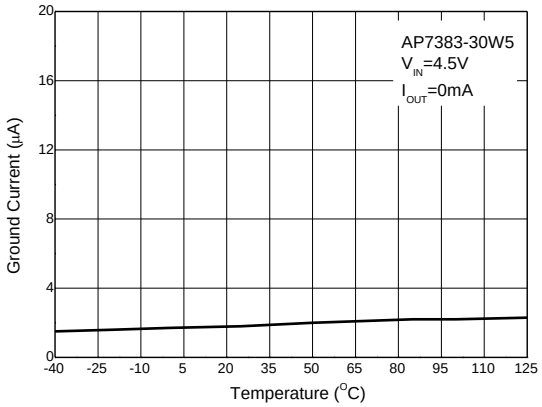

Load Transient

C_{IN}=1µF, C_{OUT}=1µF, V_{IN}=V_{OUT}+1.5V to 30V, I_{OUT}=0 to 50mA

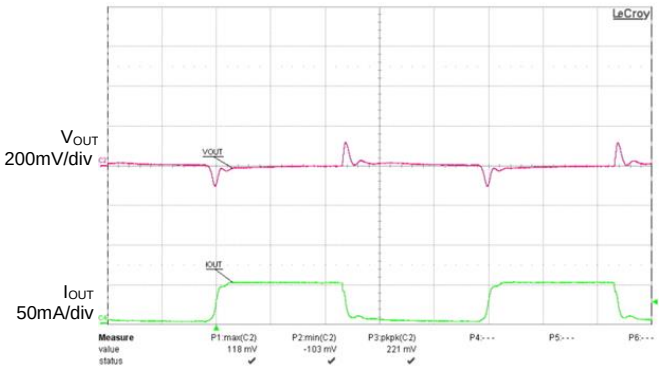

© 2024 Copyright Diodes Incorporated. All Rights Reserved.

Ordering Information

AP7383 - XXX XXX - XX

Output Voltage	Package	Packing
18 : 1.8V 30 : 3.0V 33 : 3.3V 345: 3.45V 36 : 3.6V 41 : 4.15V 44 : 4.4V 50 : 5.0V	W5/WR/WW : SOT25 Y : SOT89 FDC: U-DFN2020-6 (Type C)	7/13 : Tape & Reel

Part Number	Package Code	Package	Packing	
			Qty.	Carrier
AP7383-XXW5-7	W5	SOT25	3000	7” Tape & Reel
AP7383-XXWR-7	WR	SOT25	3000	7” Tape & Reel
AP7383-XXWW-7	WW	SOT25	3000	7” Tape & Reel
AP7383-XXY-13	Y	SOT89	2500	13” Tape & Reel
AP7383-XXFDC-7	FDC	U-DFN2020-6 (Type C)	3000	7” Tape & Reel

© 2024 Copyright Diodes Incorporated. All Rights Reserved.

Marking Information

(1) SOT25

(Top View)

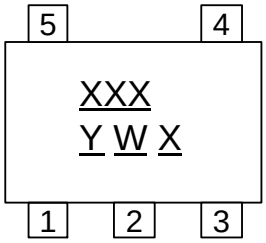

XXX : Identification Code
Y : Year 0 to 9
W : Week : A to Z : 1 to 26 week;
a to z : 27 to 52 week; z represents
52 and 53 week
X : Internal Code

Part Number	Package	Identification Code
AP7383-18W5-7	SOT25	F3A
AP7383-30W5-7	SOT25	F3B
AP7383-33W5-7	SOT25	F3C
AP7383-36W5-7	SOT25	F3D
AP7383-41W5-7 (*)	SOT25	F3E
AP7383-44W5-7 (*)	SOT25	F3F
AP7383-50W5-7	SOT25	F3G
AP7383-18WR-7	SOT25	F3H
AP7383-30WR-7	SOT25	F3J
AP7383-33WR-7	SOT25	F3K
AP7383-345WR-7 (*)	SOT25	F3Z
AP7383-36WR-7	SOT25	F3M
AP7383-41WR-7 (*)	SOT25	F3N
AP7383-44WR-7 (*)	SOT25	F3P
AP7383-50WR-7	SOT25	F3R
AP7383-18WW-7	SOT25	F3S
AP7383-30WW-7	SOT25	F3T
AP7383-33WW-7	SOT25	F3U
AP7383-36WW-7	SOT25	F3V
AP7383-41WW-7 (*)	SOT25	F3W
AP7383-44WW-7 (*)	SOT25	F3X
AP7383-50WW-7	SOT25	F3Y

*Not Recommend For New Design

© 2024 Copyright Diodes Incorporated. All Rights Reserved.

Marking Information (continued)

(2) SOT89

(Top View)

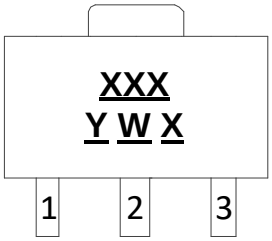

XXX : Identification Code
Y : Year : 0 to 9
W : Week : A to Z : 1 to 26 week;
a to z : 27 to 52 week;
z represents 52 and 53 week
X : Internal Code

Part Number	Package	Identification Code
AP7383-18Y-13	SOT89	F3A
AP7383-30Y-13	SOT89	F3B
AP7383-33Y-13	SOT89	F3C
AP7383-36Y-13	SOT89	F3D
AP7383-41Y-13 (*)	SOT89	F3E
AP7383-44Y-13 (*)	SOT89	F3F
AP7383-50Y-13	SOT89	F3G

*Not Recommend For New Design

(3) U-DFN2020-6 (Type C)

(Top View)

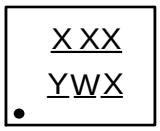

XXX : Identification Code
Y : Year : 0 to 9
W : Week : A to Z : 1 to 26 week;
a to z : 27 to 52 week; z represents
52 and 53 week
X : Internal Code

Part Number	Package	Identification Code
AP7383-18FDC-7	U-DFN2020-6 (Type C)	F3A
AP7383-30FDC-7	U-DFN2020-6 (Type C)	F3B
AP7383-33FDC-7	U-DFN2020-6 (Type C)	F3C
AP7383-36FDC-7	U-DFN2020-6 (Type C)	F3D
AP7383-41FDC-7	U-DFN2020-6 (Type C)	F3E
AP7383-44FDC-7	U-DFN2020-6 (Type C)	F3F
AP7383-50FDC-7	U-DFN2020-6 (Type C)	F3G

© 2024 Copyright Diodes Incorporated. All Rights Reserved.

Package Outline Dimensions

Please see http://www.diodes.com/package-outlines.html for the latest version.

(1) Package Type: SOT89

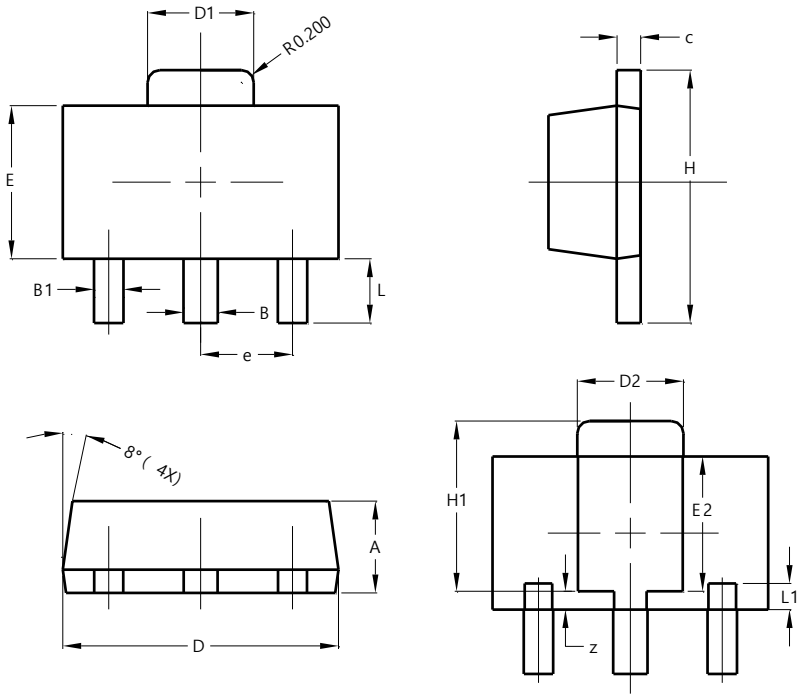

SOT89			
Dim	**Min**	**Max**	**Typ**
A	1.40	1.60	1.50
B	0.50	0.62	0.56
B1	0.42	0.54	0.48
c	0.35	0.43	0.38
D	4.40	4.60	4.50
D1	1.62	1.83	1.733
D2	1.61	1.81	1.71
E	2.40	2.60	2.50
E2	2.05	2.35	2.20
e	—	—	1.50
H	3.95	4.25	4.10
H1	2.63	2.93	2.78
L	0.90	1.20	1.05
L1	0.327	0.527	0.427
z	0.20	0.40	0.30
All Dimensions in mm			

(2) Package Type: SOT25

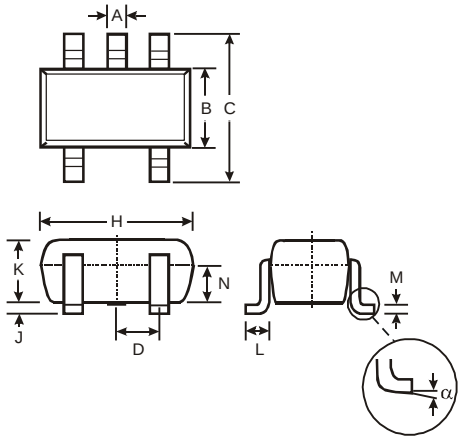

SOT25			
Dim	**Min**	**Max**	**Typ**
A	0.35	0.50	0.38
B	1.50	1.70	1.60
C	2.70	3.00	2.80
D	—	—	0.95
H	2.90	3.10	3.00
J	0.013	0.10	0.05
K	1.00	1.30	1.10
L	0.35	0.55	0.40
M	0.10	0.20	0.15
N	0.70	0.80	0.75
α	0°	8°	—
All Dimensions in mm			

© 2024 Copyright Diodes Incorporated. All Rights Reserved.

Package Outline Dimensions (continued)

Please see http://www.diodes.com/package-outlines.html for the latest version.

(3) Package Type: U-DFN2020-6 (Type C)

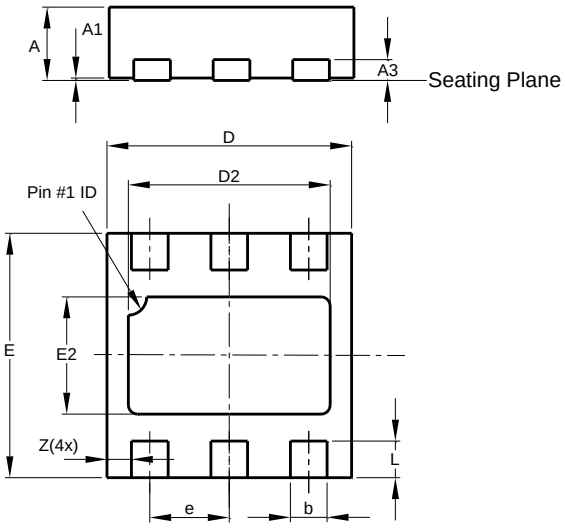

U-DFN2020-6 Type C			
Dim	**Min**	**Max**	**Typ**
A	0.57	0.63	0.60
A1	0.00	0.05	0.02
A3	—	—	0.15
b	0.25	0.35	0.30
D	1.95	2.075	2.00
D2	1.55	1.75	1.65
E	1.95	2.075	2.00
E2	0.86	1.06	0.96
e	—	—	0.65
L	0.25	0.35	0.30
Z	—	—	0.20
All Dimensions in mm			

Suggested Pad Layout

Please see http://www.diodes.com/package-outlines.html for the latest version.

(1) Package Type: SOT89

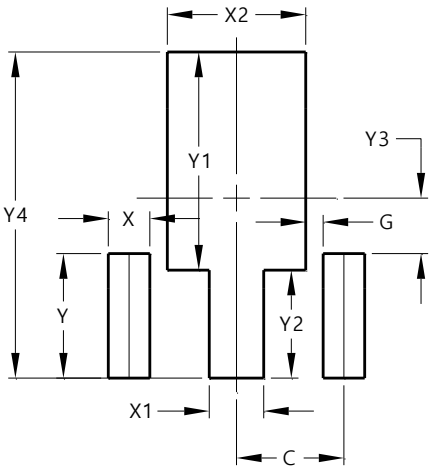

Dimensions	Value (in mm)
C	1.500
G	0.244
X	0.580
X1	0.760
X2	1.933
Y	1.730
Y1	3.030
Y2	1.500
Y3	0.770
Y4	4.530

© 2024 Copyright Diodes Incorporated. All Rights Reserved.

Suggested Pad Layout (continued)

Please see http://www.diodes.com/package-outlines.html for the latest version.

(2) Package Type: SOT25

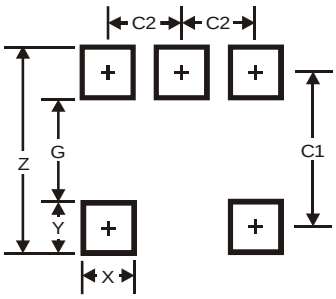

Dimensions	Value
Z	3.20
G	1.60
X	0.55
Y	0.80
C1	2.40
C2	0.95

(3) Package Type: U-DFN2020-6 (Type C)

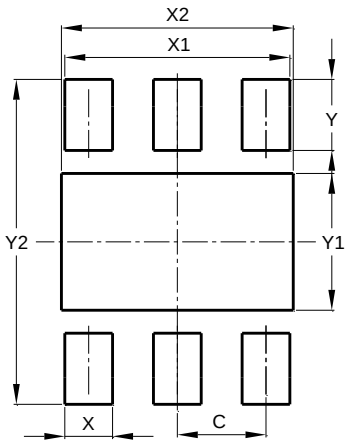

Dimensions	Value (in mm)
C	0.650
X	0.350
X1	1.650
X2	1.700
Y	0.525
Y1	1.010
Y2	2.400

Mechanical Data

- Moisture Sensitivity:
  - SOT25/U-DFN2020-6 (Type C): Level 1 per J-STD-020
  - SOT89: Level 3 per J-STD-020
- Terminals:
  - SOT25/SOT89: Finish – Matte Tin Plated Leads, Solderable per MIL-STD-202, Method 208 e3
  - U-DFN2020-6 (Type C): Finish NiPdAu over Copper Lead-Frame. Solderable per MIL-STD-202, Method 208 e4
- Weight:
  - SOT25: 0.016 grams (Approximate)
  - SOT89: 0.055 grams (Approximate)
  - U-DFN2020-6 (Type C): 0.007 grams (Approximate)

© 2024 Copyright Diodes Incorporated. All Rights Reserved.

IMPORTANT NOTICE

1. DIODES INCORPORATED (Diodes) AND ITS SUBSIDIARIES MAKE NO WARRANTY OF ANY KIND, EXPRESS OR IMPLIED, WITH REGARDS TO ANY INFORMATION CONTAINED IN THIS DOCUMENT, INCLUDING, BUT NOT LIMITED TO, THE IMPLIED WARRANTIES OF MERCHANTABILITY, FITNESS FOR A PARTICULAR PURPOSE OR NON-INFRINGEMENT OF THIRD PARTY INTELLECTUAL PROPERTY RIGHTS (AND THEIR EQUIVALENTS UNDER THE LAWS OF ANY JURISDICTION).

2. The Information contained herein is for informational purpose only and is provided only to illustrate the operation of Diodes' products described herein and application examples. Diodes does not assume any liability arising out of the application or use of this document or any product described herein. This document is intended for skilled and technically trained engineering customers and users who design with Diodes' products. Diodes' products may be used to facilitate safety-related applications; however, in all instances customers and users are responsible for (a) selecting the appropriate Diodes products for their applications, (b) evaluating the suitability of Diodes' products for their intended applications, (c) ensuring their applications, which incorporate Diodes' products, comply the applicable legal and regulatory requirements as well as safety and functional-safety related standards, and (d) ensuring they design with appropriate safeguards (including testing, validation, quality control techniques, redundancy, malfunction prevention, and appropriate treatment for aging degradation) to minimize the risks associated with their applications.

3. Diodes assumes no liability for any application-related information, support, assistance or feedback that may be provided by Diodes from time to time. Any customer or user of this document or products described herein will assume all risks and liabilities associated with such use, and will hold Diodes and all companies whose products are represented herein or on Diodes' websites, harmless against all damages and liabilities.

4. Products described herein may be covered by one or more United States, international or foreign patents and pending patent applications. Product names and markings noted herein may also be covered by one or more United States, international or foreign trademarks and trademark applications. Diodes does not convey any license under any of its intellectual property rights or the rights of any third parties (including third parties whose products and services may be described in this document or on Diodes' website) under this document.

5. Diodes' products are provided subject to Diodes' Standard Terms and Conditions of Sale (https://www.diodes.com/about/company/terms-and-conditions/terms-and-conditions-of-sales/) or other applicable terms. This document does not alter or expand the applicable warranties provided by Diodes. Diodes does not warrant or accept any liability whatsoever in respect of any products purchased through unauthorized sales channel.

6. Diodes' products and technology may not be used for or incorporated into any products or systems whose manufacture, use or sale is prohibited under any applicable laws and regulations. Should customers or users use Diodes' products in contravention of any applicable laws or regulations, or for any unintended or unauthorized application, customers and users will (a) be solely responsible for any damages, losses or penalties arising in connection therewith or as a result thereof, and (b) indemnify and hold Diodes and its representatives and agents harmless against any and all claims, damages, expenses, and attorney fees arising out of, directly or indirectly, any claim relating to any noncompliance with the applicable laws and regulations, as well as any unintended or unauthorized application.

7. While efforts have been made to ensure the information contained in this document is accurate, complete and current, it may contain technical inaccuracies, omissions and typographical errors. Diodes does not warrant that information contained in this document is error-free and Diodes is under no obligation to update or otherwise correct this information. Notwithstanding the foregoing, Diodes reserves the right to make modifications, enhancements, improvements, corrections or other changes without further notice to this document and any product described herein. This document is written in English but may be translated into multiple languages for reference. Only the English version of this document is the final and determinative format released by Diodes.

8. Any unauthorized copying, modification, distribution, transmission, display or other use of this document (or any portion hereof) is prohibited. Diodes assumes no responsibility for any losses incurred by the customers or users or any third parties arising from any such unauthorized use.

9. This Notice may be periodically updated with the most recent version available at https://www.diodes.com/about/company/terms-and-conditions/important-notice

The Diodes logo is a registered trademark of Diodes Incorporated in the United States and other countries.
All other trademarks are the property of their respective owners.
© 2024 Diodes Incorporated. All Rights Reserved.

www.diodes.com

© 2024 Copyright Diodes Incorporated. All Rights Reserved.

ENTEGRECİ

Bu belge www.entegreci.com üzerinden sunulmaktadır.

Elektronik komponent tedarikinde Entegreci

Entegreci, Eskişehir merkezli, Türkiye geneline satış yapan bir elektronik komponent mağazasıdır. Entegreler (IC), mikrodenetleyiciler, transistörler, diyotlar, pasif elemanlar, konnektörler, modüller ve geliştirme kartları tek adetten seri üretim adetlerine kadar satılır. Ürün sayfalarında güncel stok durumunu, fiyatı ve datasheet bağlantısını bulabilirsiniz.

Parça koduyla arama

Üretici parça numarasını yazın; stok ve fiyatı hemen görün.

www.entegreci.com

Ürün kategorileri

Entegreden kapasitöre tüm elektronik komponent kategorileri.

Kategorilere göz atın

Üreticiler

Aradığınız üreticinin ürünlerini tek sayfada inceleyin.

Üreticileri görün

Toplu alım ve teklif

Listede olmayan ya da yüksek adetli parçalar için teklif isteyin.

Teklif isteyin

www.entegreci.com | **destek@entegreci.com** | **0850 305 90 34**

Entegreci is an online electronic components store based in Türkiye. Search by manufacturer part number to see stock, prices and datasheets for integrated circuits, microcontrollers, transistors, passive components and connectors, or request a quote for parts that are not listed.

Bu sayfa Entegreci tarafından eklenmiştir. Belgenin önceki sayfaları asıl yayıncısına aittir ve içeriği değiştirilmemiştir; en güncel sürüm için belgenin yayıncısına başvurun.