Low-Input, Low-Dropout, 3-A Linear Regulator with Enable Control

Features

- Input Voltage Range: 1.4 V to 6.5 V
- Adjustable Output Voltage: 0.5 V to 5.2 V
- ±2% Accuracy over Line Regulation, Load Regulation, and Operating Temperature Range
- 3-A Maximum Output Current
- Low Dropout Voltage: 300-mV Maximum at 3 A
- Output Enable Control
- Inherent Output Soft Start Control
- Excellent Transient Response
- High PSRR:
  - 63 dB at 1 kHz
  - 35 dB at 100 kHz
- 24-μV_{RMS} Output Voltage Noise (100 Hz to 100 kHz)
- Stable with a 10-µF Ceramic Output Capacitor
- Protection:
  - Over-Current Protection
  - Over-Temperature Protection
  - Output Short-to-Ground Protection
- Package:
  - ESOP8
- RoHS Compliant

Applications

- Communication Infrastructure
- Telecom and Networking Cards
- Motherboards and Peripheral Cards
- Computing Systems

Description

The TPL6305 is a 3-A high-current, 1.4-V low-input voltage linear regulator with only 300-mV maximum ultra-low-dropout voltage at full-load condition. The TPL6305 supports adjustable output voltage ranging from 0.5 V to 5.2 V with an external resistor divider.

Low-input voltage and ultra-low-dropout voltage make the TPL6305 the ideal power supply for applications requiring output voltage very close to the input voltage.

The TPL6305 integrates an enable control function and provides a very low standby power dissipation. The TPL6305 also provides output soft-start control and excellent transient response.

The TPL6305 provides a thermal-enhanced 8-pin ESOP package with guaranteed operating temperature ranging from −40°C to +125°C.

Typical Application Circuit

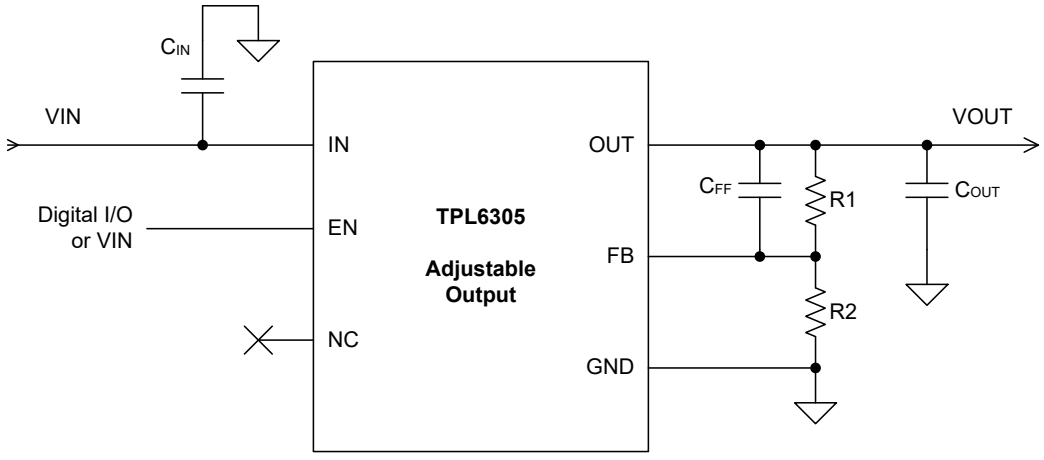

Table of Contents

Features 1
Applications 1
Description 1
Typical Application Circuit 1
Product Family Table 3
Revision History 3
Pin Configuration and Functions 4
Specifications 5
Absolute Maximum Ratings (1) 5
ESD, Electrostatic Discharge Protection 5
Recommended Operating Conditions 5
Thermal Information 5
Electrical Characteristics 6
Typical Performance Characteristics 8
Detailed Description 10
Overview 10
Functional Block Diagram 10
Feature Description 10
Application and Implementation 13
Application Information 13
Typical Application 13
Layout 15
Layout Guideline 15
Tape and Reel Information 16
Package Outline Dimensions 17
ESOP8-F 17
Order Information 18
IMPORTANT NOTICE AND DISCLAIMER 19

Product Family Table

Part Number	Output Voltage (V)	Package
TPL6305	Adjustable (0.5 V to 5.2 V)	ESOP8

Revision History

Date	Revision	Notes
2022-05-15	Rev.Pre.0	Preliminary Revision.
2022-10-31	Rev.Pre.1	Updated Electrical Characteristics and Typical Performance Characteristics.
2022-12-22	Rev.A.0	Initial Released.
2024-03-30	Rev.A.1	Updated thermal information.

Pin Configuration and Functions

TPL6305
ESOP8 Package
Top View

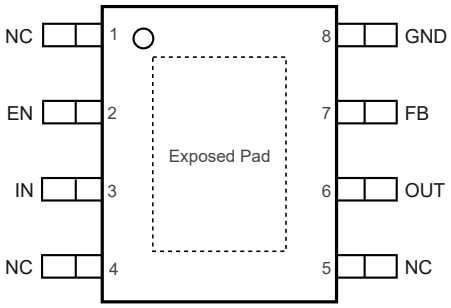

Table 1. Pin Functions: TPL6305

Pin No.	Pin Name	I/O	Description
2	EN	I	Regulator enable pin. Drive EN high to turn on the regulator; drive EN low to turn off the regulator. The EN pin must not be left floating.
7	FB	I	Output voltage feedback pin. Connect to an external resistor divider to adjust the output voltage. Although it is not required for stability, a 10-nF feed-forward capacitor from FB to OUT (as close as possible to FB pin) is recommended to improve regulator transient performance.
8	GND	-	Ground reference pin. Connect the GND pin to the PCB ground plane directly.
3	IN	I	Input voltage pin. Suggest connecting a 10-μF or larger ceramic capacitor from IN to ground (as close as possible to the IN pin) to reduce the jitter from the previous-stage power supply.
1, 4, 5	NC	-	Not connected internally.
6	OUT	O	Regulated output voltage pin. A 10-μF or greater ceramic capacitor from OUT to ground (as close as possible to OUT pin) is required to ensure regulator stability.
-	Exposed Pad	-	Exposed PAD must be connected to a large-area ground plane to maximize the thermal performance.

Specifications

Absolute Maximum Ratings (1)

Parameter		Min	Max	Unit
IN, EN		−0.3	7	V
OUT, FB		−0.3	V_{IN} + 0.3	V
T_J	Junction Temperature Range	−40	150	°C
T_{STG}	Storage Temperature Range	−65	150	°C
T_L	Lead Temperature (Soldering 10 sec)		260	°C

(1) Stresses beyond those listed under Absolute Maximum Ratings may cause permanent damage to the device. Exposure to any Absolute Maximum Rating condition for extended periods may affect device reliability and lifetime.
(2) All voltage values are with respect to GND.

ESD, Electrostatic Discharge Protection

Parameter		Condition	Minimum Level	Unit
HBM	Human Body Model ESD	ANSI/ESDA/JEDEC JS-001 (1)	±4	kV
CDM	Charged Device Model ESD	ANSI/ESDA/JEDEC JS-002 (2)	±1.5	kV

(1) JEDEC document JEP155 states that 500-V HBM allows safe manufacturing with a standard ESD control process.
(2) JEDEC document JEP157 states that 250-V CDM allows safe manufacturing with a standard ESD control process.

Recommended Operating Conditions

Parameter		Min	Typ	Max	Unit
IN	Input Voltage	1.4		6.5	V
EN	Enable Voltage	0		6.5	V
C_{OUT}	Output Capacitor	10			μF
C_{FF}	Feed-forward Capacitor		10		nF
T_J	Junction Temperature Range	−40		125	°C

Thermal Information

Package Type	θ_{JA}	θ_{JB}	$\theta_{JC,TOP}$	Unit
ESOP8	31.66	10.27	45.44	°C/W

Electrical Characteristics

All test conditions: T_J = −40°C to +125°C (typical value at T_J = +25°C), V_{IN} = $V_{OUT(NOM)}$ + 0.4 V or 1.4 V, whichever is greater; V_{EN} = 1.1 V, $V_{OUT(NOM)}$ = 0.5 V, I_{OUT} = 1 mA, C_{IN} = 10 µF, C_{OUT} = 10 µF, C_{FF} = open, unless otherwise noted.

Parameter		Conditions	Min	Typ	Max	Unit
Supply Voltage and Current						
V_{IN}	Supply Voltage Range (1)		$V_{IN(MIN)}$		6.5	V
UVLO	Input Supply UVLO	V_{IN} rising, R_L = 1 kΩ			1.39	V
	Hysteresis			200		mV
I_{GND}	GND Current	V_{IN} = 6.5 V, I_{OUT} = 5 mA		5	15	mA
		V_{IN} = 6.5 V, I_{OUT} = 3 A		5	15	mA
I_{SD}	Shutdown Current	V_{IN} = 6.5 V, V_{EN} = 0 V			68	µA
Device Enable						
$V_{IH(EN)}$	EN High-level Input Voltage	Device enable	1.1		6.5	V
$V_{IL(EN)}$	EN Low-level Input Voltage	Device disable	0		0.4	V
I_{EN}	EN Leakage Current	V_{IN} = 6.5 V, V_{EN} = 0 V to 6.5 V	−0.5		0.5	µA
Regulated Output Voltage and Current						
V_{FB}	Feedback Voltage		−2%	0.5	+2%	V
I_{FB}	FB Pin Leakage Current	V_{IN} = 6.5 V, stress V_{FB} = 0.5 V	−100		100	nA
V_{OUT}	Output Accuracy (2)	V_{IN} = $V_{OUT(NOM)}$ + 0.4 V or 1.4 V to 6.5 V, V_{OUT} = 0.5 V to 5.2 V, I_{OUT} = 5 mA to 3 A	–2%		+2%	
ΔV_{OUT}	Line Regulation	V_{IN} = 1.4 V to 6.5 V, I_{OUT} = 5 mA		0.03		mV/V
	Load Regulation	I_{OUT} = 5 mA to 3 A		0.08		mV/A
V_{DO}	Dropout Voltage (3)	V_{IN} = 1.4 V, I_{OUT} = 1 A, V_{FB} = 0.5 V – 3%		40	100	mV
		V_{IN} = 1.4 V, I_{OUT} = 2 A, V_{FB} = 0.5 V – 3%		80	200	mV
		V_{IN} = 1.4 V, I_{OUT} = 3 A, V_{FB} = 0.5 V – 3%		140	300	mV
		V_{IN} = 5.4 V, I_{OUT} = 3 A, V_{FB} = 0.5 V – 3%		145	300	mV
		V_{IN} = 5.6 V, I_{OUT} = 3 A, V_{FB} = 0.5 V – 3%		145	300	mV
I_{LIM}	Output Current Limit	V_{IN} = 1.4 V, V_{OUT} = 0.9 × $V_{OUT(NOM)}$	3.7	4.7		A
I_{SC}	Short Circuit to Ground Current Limit Protection	V_{OUT} is forced to ground, T_A = 25°C		3		A
t_{STR}	Start-up Time	V_{OUT} = 0% to 90% of $V_{OUT(NOM)}$		1		ms
PSRR	Power Supply Ripple Rejection	V_{IN} = 5.5 V, V_{OUT}= 5.2 V, I_{OUT} = 2 A, f = 1 kHz		63		dB
		V_{IN} = 5.5 V, V_{OUT}= 5.2 V, I_{OUT} = 2 A, f = 100 kHz		35		dB
V_N	Output Noise Voltage	V_{IN} = 1.4 V, V_{OUT}= 0.5 V, I_{OUT} = 2 A, BW = 100 Hz to 100 kHz		24		μV_{RMS}

Parameter		Conditions	Min	Typ	Max	Unit
Temperature Range						
T_{SD}	Thermal Shutdown Threshold	Temperature increasing		160		°C
	Hysteresis			20		°C

(1) $V_{IN(MIN)} = V_{OUT(NOM)} + V_{DO}$ or 1.4 V, whichever is greater.
(2) Resistor tolerance is not included. Output accuracy is not tested at this condition: V_{OUT} = 0.5 V, 2.3 V ≤ V_{IN} ≤ 6.5 V, and 500 mA ≤ I_{OUT} ≤ 3 A, because the power dissipation is out of package limitation.
(3) Dropout voltage is the minimum input to output voltage differential needed to maintain regulation at a specified output current and measure for $V_{OUT(NOM)}$ ≥ 1.4 V. In the dropout mode, the output voltage V_{OUT} will be equal to $V_{IN} – V_{DO}$.

Typical Performance Characteristics

All test conditions: T_J = −40°C to +125°C (typical value at T_J = +25°C), V_{IN} = $V_{OUT(NOM)}$ + 0.4 V or 1.4 V, whichever is greater; V_{EN} = 1.1 V, $V_{OUT(NOM)}$ = 0.5 V, I_{OUT} = 1 mA, C_{IN} = 10 µF, C_{OUT} = 10 µF, C_{FF} = open, unless otherwise noted.

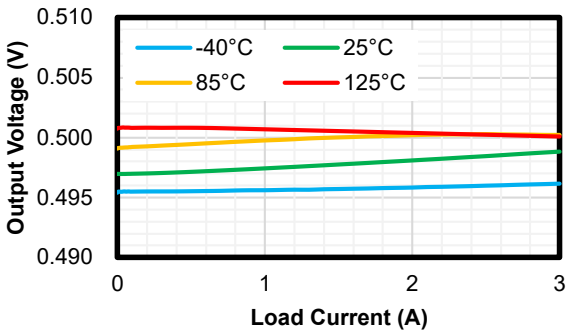

V_{OUT} = 0.5 V

Figure 1. Load Regulation

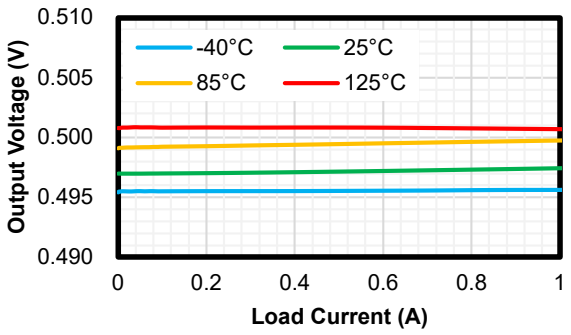

V_{OUT} = 0.5 V

Figure 2. Load Regulation at Light Load

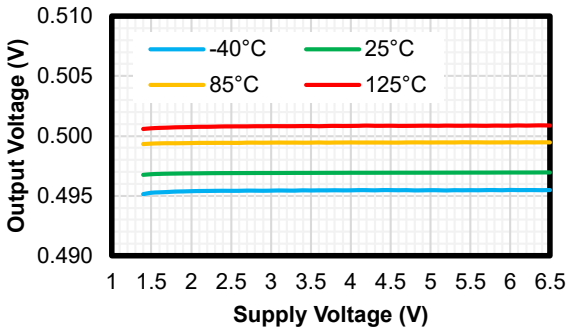

V_{OUT} = 0.5 V, I_{OUT} = 5 mA

Figure 3. Line Regulation

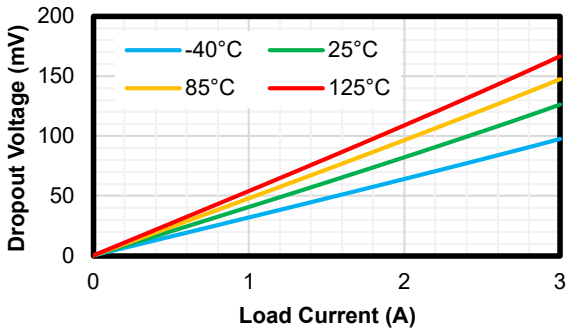

V_{IN} = 1.4 V

Figure 4. Dropot Voltage vs. Load Current

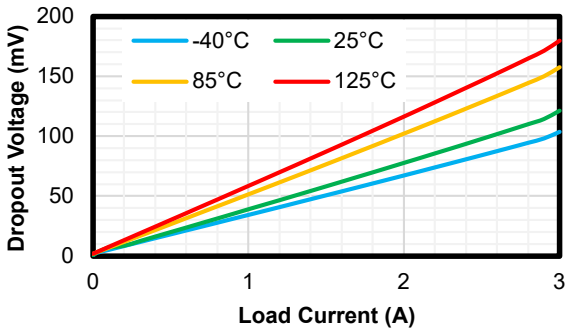

V_{IN} = 5.6 V

Figure 5. Dropot Voltage vs. Load Current

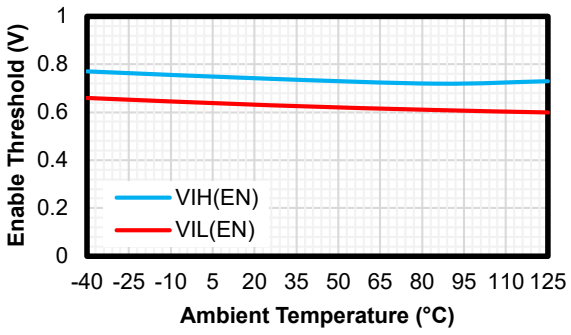

V_{IN} = 1.4 V

Figure 6. Enable Threshold vs. Temperature

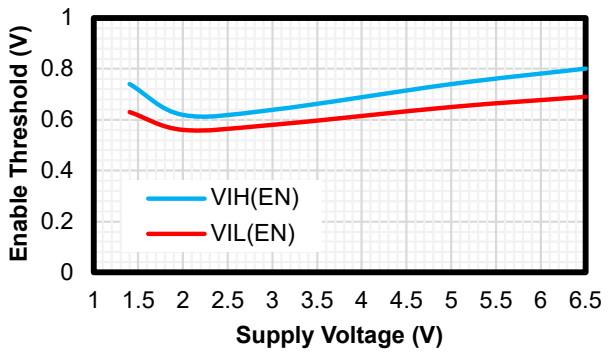

T_A = 25°C

Figure 7. Enable Threshold vs. Supply Voltage

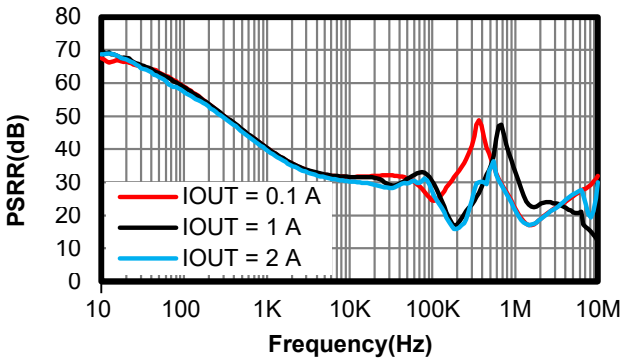

V_{IN} = 1.4 V, V_{OUT} = 0.5 V

Figure 8. PSRR

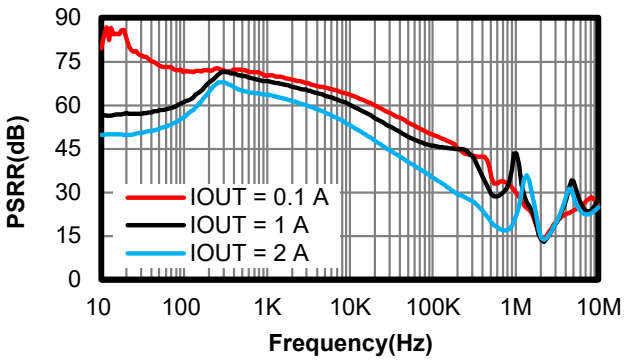

V_{IN} = 5.5 V, V_{OUT} = 5.2 V

Figure 9. PSRR

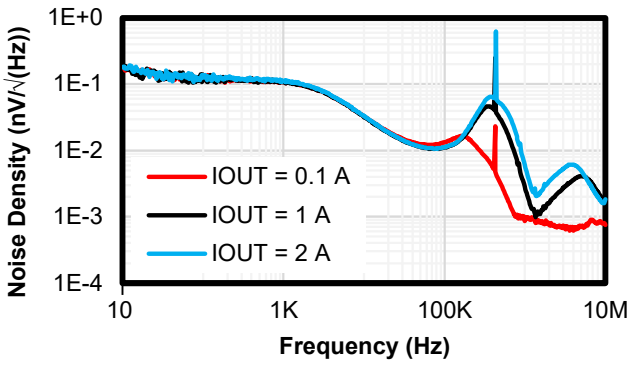

V_{IN} = 1.4 V, V_{OUT} = 0.5 V

Figure 10. Noise

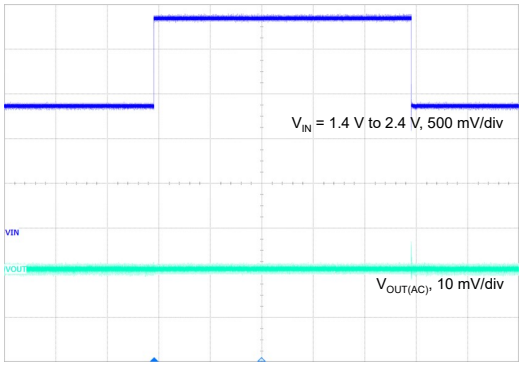

V_{IN} = 1.4 V to 2.4 V, V_{OUT} = 0.5 V

Figure 11. Line Transient

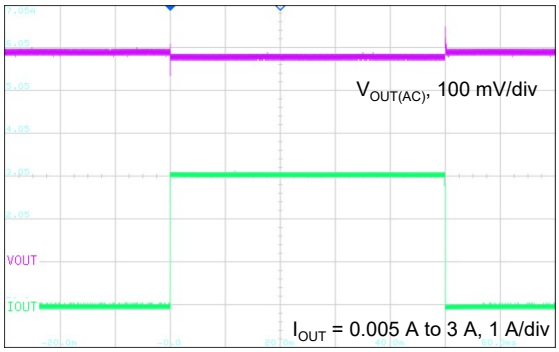

I_{OUT} = 0.1 A to 3 A, V_{OUT} = 0.5 V

Figure 12. Load Transient

Detailed Description

Overview

The TPL6305 is a 3-A high-current, 1.4-V low-input voltage linear regulator with only 300-mV maximum ultra-low-dropout voltage at full-load condition. The TPL6305 supports adjustable output voltage ranging from 0.5 V to 5.2 V with an external resistor divider.

Low-input voltage and ultra-low-dropout voltage make the TPL6305 the ideal power supply for applications requiring output voltage very close to the input voltage.

The TPL6305 integrates an enable control function and provides a very low standby power dissipation. The TPL6305 also provides output soft-start control and excellent transient response.

Functional Block Diagram

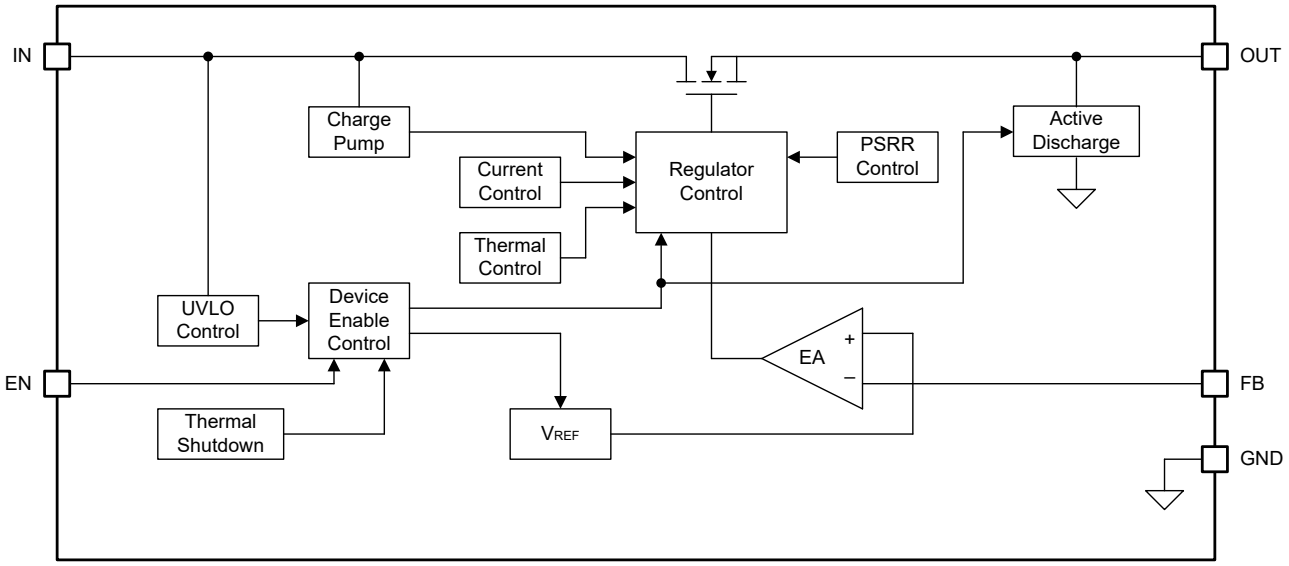

Figure 13. Functional Block Diagram

Feature Description

Enable (EN)

The TPL6305 provides a device enable pin (EN) to enable or disable the device. Connect this pin to the GPIO of an external digital logic control circuit to control the device. When the V_{EN} voltage falls below $V_{IL(EN)}$, the LDO device turns off, and when the V_{EN} ramps above $V_{IH(EN)}$, the LDO device turns on.

Under-Voltage Lockout (UVLO)

The TPL6305 uses an under-voltage lockout circuit to keep the output shut off until the internal circuitry operates properly. Refer to the Electrical Characteristics table for the UVLO threshold and hysteresis.

Adjustable Output Voltage (OUT and FB)

The TPL6305 is available in adjustable output voltage from 0.5 V to 5.2 V. The output voltage is determined by the value of the external resistor R1 and R2 in Figure 15. Use Equation 1 to calculate the output voltage.

$$V_{OUT} = V_{FB} \times \left(1 + \frac{R1}{R2}\right) \quad (1)$$

Where, the feedback voltage V_{FB} is 0.5 V.

Table 1 provides a list of recommended resistor combinations to achieve the common output voltage values.

Table 2. External Resistor Combinations

Target Output Voltage (V)	External Resistors Divider		Calculated Output Voltage (V)
	R1 (kΩ)	R2 (kΩ)	
0.50	0	Open	0.500
0.60	12.4	62	0.600
0.70	12.4	30.9	0.701
0.80	12	20	0.800
0.90	12	15	0.900
1.00	12.4	12.4	1.000
1.20	12.4	8.87	1.199
1.50	12.4	6.2	1.500
1.80	12.4	4.75	1.805
2.50	12	3	2.500
2.80	12	2.61	2.799
3.00	12	2.4	3.000
3.30	12.4	2.21	3.305
3.60	12.4	2	3.600
4.20	12	1.62	4.204
4.50	12	1.5	4.500
5.00	12	1.33	5.011

Over-Current Protection

The TPL6305 integrates an internal current limit that helps to protect the regulator during fault conditions.

- When the output voltage is pulled down below the regulated voltage, over-current protection starts to work and limit the output current to I_{LIM}.
- When the output voltage is pulled down below the short-to-ground threshold (about 140 mV), or shorted to ground directly, short-to-ground protection starts to work and limit the output current to I_{SC}.
- During startup, the output current is limited to I_{SC} before the output voltage ramps higher than the short-to-ground threshold.

Under the over-current conditions, the internal junction temperature ramps up quickly. When the junction temperature is high enough, it will cause the over-temperature protection.

Over-Temperature Protection

The over-temperature protection starts to work when the junction temperature exceeds the thermal shutdown (TSD) threshold, which turns off the regulator immediately. Until when the device cools down and the junction temperature falls below the value which equals to thermal shutdown threshold minus thermal shutdown hysteresis, the regulator turns on again.

The junction temperature range should be limited according to the Recommended Operating Conditions table, continuously operating above the junction temperature range will reduce the device lifetime.

Application and Implementation

> Note
>
> Information in the following application sections is not part of the 3PEAK's component specification and 3PEAK does not warrant its accuracy or completeness. 3PEAK's customers are responsible for determining suitability of components for their purposes. Customers should validate and test their design implementation to confirm system functionality.

Application Information

The TPL6305 is a 3-A high-current, 1.4-V low-input voltage linear regulator with only 300-mV maximum ultra-low-dropout voltage at full-load condition. The following application schematic shows a typical usage of TPL6305.

Typical Application

Figure 14 shows the typical application schematic of the TPL6305.

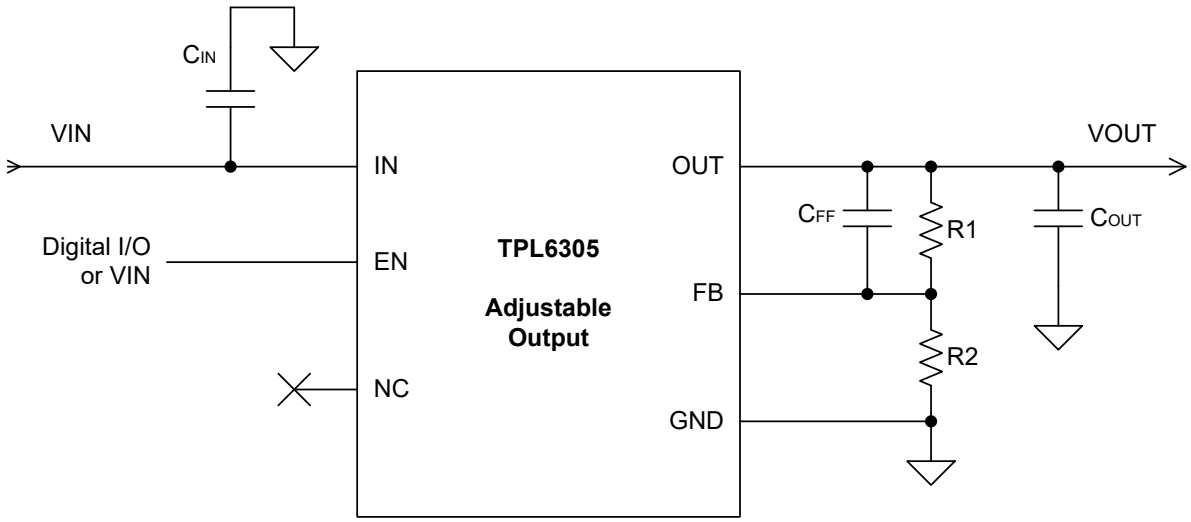

Figure 14. Typical Application Circuit

Input Capacitor and Output Capacitor

The TPL6305 is designed to be stable with low equivalent series resistance (ESR) ceramic capacitors at the input, output, and noise-reduction pin (NR/SS). It is recommended to use ceramic capacitors with X7R-, X5R-, and COG-rated dielectric materials to get good capacitive stability across temperature.

3PEAK recommends adding a 10-µF or greater capacitor with a 0.1-µF bypass capacitor in parallel at the IN pin to keep the input voltage stable. The voltage rating of the capacitors must be greater than the maximum input voltage.

To ensure loop stability, the TPL6305 requires a minimum value of 10-µF low ESR output capacitor. 3PEAK recommends selecting an X7R-type 10-µF ceramic capacitor with low ESR over temperature.

Both input capacitors and output capacitors must be placed as close to the device pins as possible.

Power Dissipation

During normal operation, LDO junction temperature should meet the requirement in the Recommended Operating Conditions table. Using below two equations to calculate the power dissipation and estimate the junction temperature.

The power dissipation can be calculated using Equation 2.

$$P_D = (V_{IN} - V_{OUT}) \times I_{OUT} + V_{IN} \times I_{GND} \quad (2)$$

The junction temperature can be estimated using Equation 3. θ_{JA} is the junction-to-ambient thermal resistance.

$$T_J = T_A + P_D \times \theta_{JA} \quad (3)$$

Layout

Layout Guideline

- Both input capacitors and output capacitors must be placed to the device pins as close as possible, and the vias between capacitors and device power pins must be avoided.
- It is recommended to bypass the input pin to ground with a 0.1-μF bypass capacitor. The loop area formed by the bypass capacitor connection, the IN pin and the GND pin of the system must be as small as possible.
- It is recommended to use wide and thick copper to minimize I×R drop and heat dissipation.
- Exposed pad must be connected to the PCB ground plane directly, the copper area must be as large as possible.

Tape and Reel Information

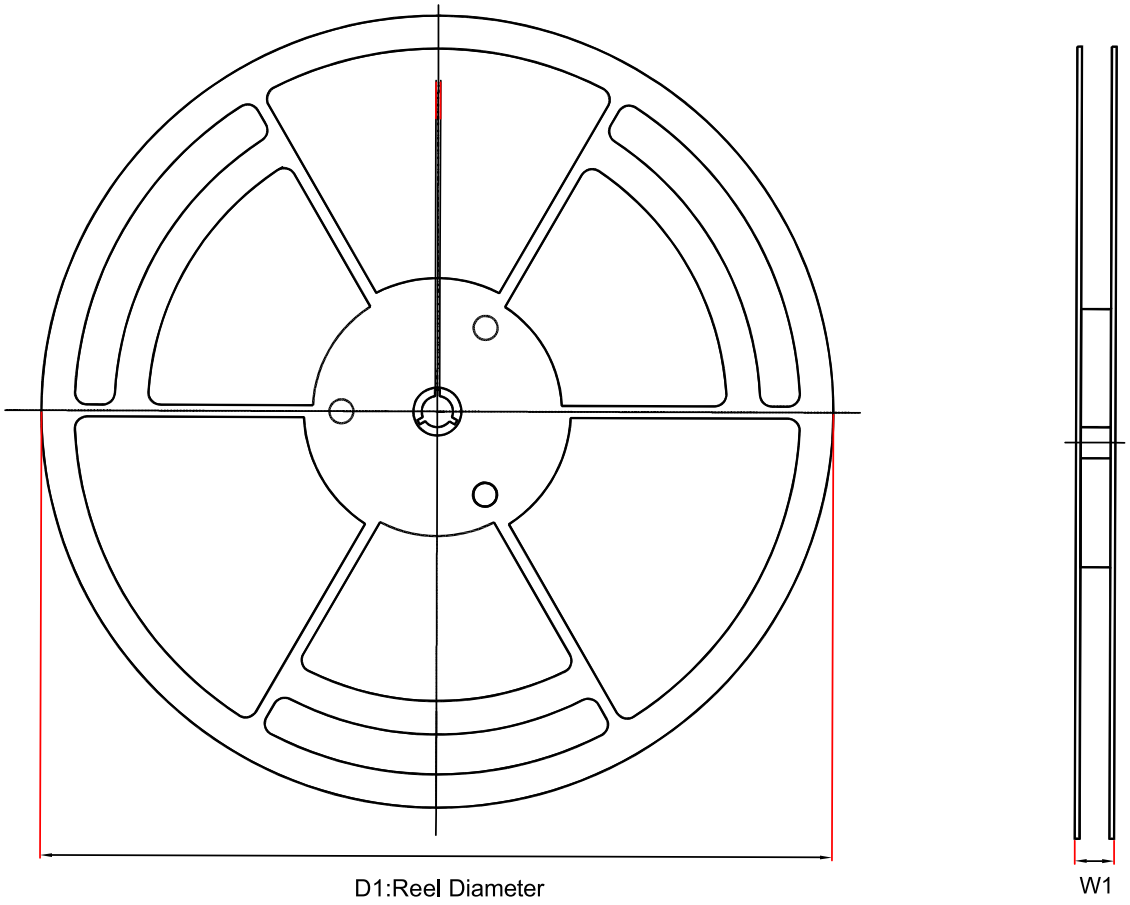

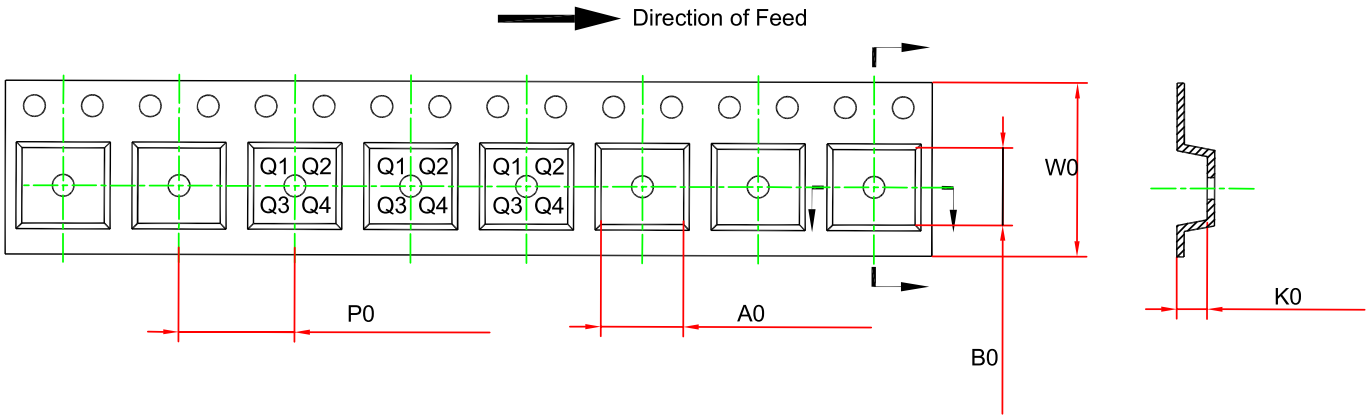

Order Number	Package	D1 (mm)	W1 (mm)	A0 (mm)	B0 (mm)	K0 (mm)	P0 (mm)	W0 (mm)	Pin1 Quadrant
TPL6305AD-ES1R	ESOP8	330.0	17.6	6.4	5.4	2.1	8.0	12.0	Q1

Package Outline Dimensions

ESOP8-F

Package Outline Dimensions ES1(ESOP-8-F)

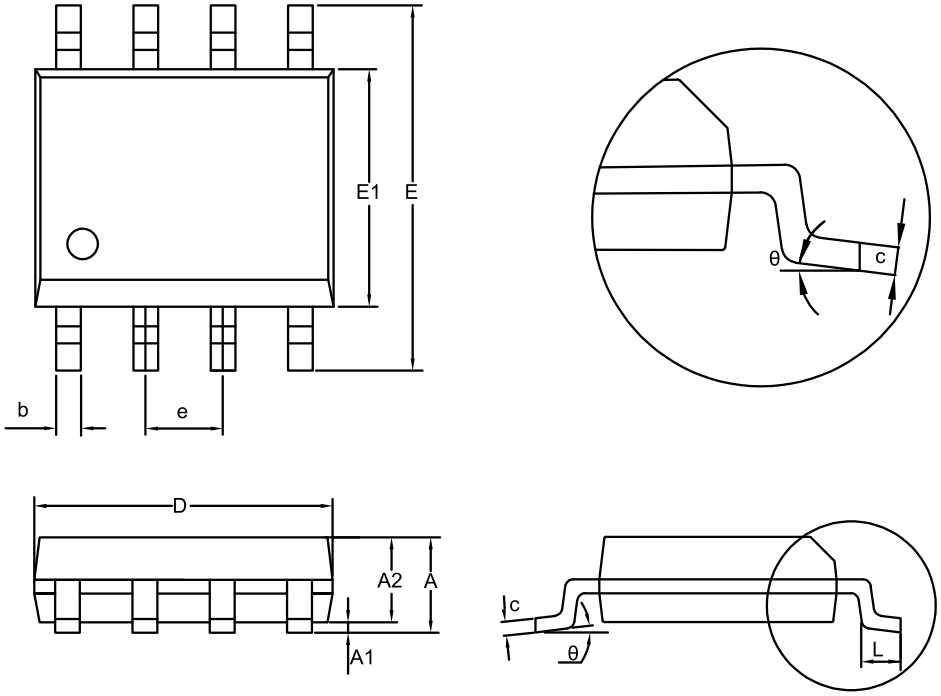

Symbol	Dimensions In Millimeters		Dimensions In Inches	
	MIN	MAX	MIN	MAX
A	1.300	1.700	0.051	0.067
A1	0.000	0.100	0.000	0.004
A2	1.350	1.550	0.053	0.061
b	0.330	0.510	0.013	0.020
c	0.170	0.250	0.007	0.010
D	4.700	5.100	0.185	0.201
D1	3.050	3.250	0.120	0.128
E	5.800	6.200	0.228	0.244
E1	3.800	4.000	0.150	0.157
E2	2.160	2.360	0.085	0.093
e	1.270 BSC		0.050 BSC	
L	0.400	1.270	0.016	0.050
θ	0	8°	0	8°

NOTES

1. Do not include mold flash or protrusion.
2. This drawing is subject to change without notice.

Order Information

Order Number	Operating Temperature Range	Package	Marking Information	MSL	Transport Media, Quantity	Eco Plan
TPL6305AD-ES1R	−40°C to +125°C	ESOP8	L635A	MSL3	Tape and Reel, 4,000	Green

Green: 3PEAK defines "Green" to mean RoHS compatible and free of halogen substances.

IMPORTANT NOTICE AND DISCLAIMER

Copyright© 3PEAK 2012-2024. All rights reserved.

Trademarks. Any of the 思瑞浦 or 3PEAK trade names, trademarks, graphic marks, and domain names contained in this document /material are the property of 3PEAK. You may NOT reproduce, modify, publish, transmit or distribute any Trademark without the prior written consent of 3PEAK.

Performance Information. Performance tests or performance range contained in this document/material are either results of design simulation or actual tests conducted under designated testing environment. Any variation in testing environment or simulation environment, including but not limited to testing method, testing process or testing temperature, may affect actual performance of the product.

Disclaimer. 3PEAK provides technical and reliability data (including data sheets), design resources (including reference designs), application or other design recommendations, networking tools, security information and other resources "As Is". 3PEAK makes no warranty as to the absence of defects, and makes no warranties of any kind, express or implied, including without limitation, implied warranties as to merchantability, fitness for a particular purpose or non-infringement of any third-party's intellectual property rights. Unless otherwise specified in writing, products supplied by 3PEAK are not designed to be used in any life-threatening scenarios, including critical medical applications, automotive safety-critical systems, aviation, aerospace, or any situations where failure could result in bodily harm, loss of life, or significant property damage. 3PEAK disclaims all liability for any such unauthorized use.

This page intentionally left blank

ENTEGRECİ

Bu belge www.entegreci.com üzerinden sunulmaktadır.

Elektronik komponent tedarikinde Entegreci

Entegreci, Eskişehir merkezli, Türkiye geneline satış yapan bir elektronik komponent mağazasıdır. Entegreler (IC), mikrodenetleyiciler, transistörler, diyotlar, pasif elemanlar, konnektörler, modüller ve geliştirme kartları tek adetten seri üretim adetlerine kadar satılır. Ürün sayfalarında güncel stok durumunu, fiyatı ve datasheet bağlantısını bulabilirsiniz.

Parça koduyla arama

Üretici parça numarasını yazın; stok ve fiyatı hemen görün.

www.entegreci.com

Ürün kategorileri

Entegreden kapasitöre tüm elektronik komponent kategorileri.

Kategorilere göz atın

Üreticiler

Aradığınız üreticinin ürünlerini tek sayfada inceleyin.

Üreticileri görün

Toplu alım ve teklif

Listede olmayan ya da yüksek adetli parçalar için teklif isteyin.

Teklif isteyin

www.entegreci.com | **destek@entegreci.com** | **0850 305 90 34**

Entegreci is an online electronic components store based in Türkiye. Search by manufacturer part number to see stock, prices and datasheets for integrated circuits, microcontrollers, transistors, passive components and connectors, or request a quote for parts that are not listed.

Bu sayfa Entegreci tarafından eklenmiştir. Belgenin önceki sayfaları asıl yayıncısına aittir ve içeriği değiştirilmemiştir; en güncel sürüm için belgenin yayıncısına başvurun.