500-mA Output, High PSRR, Low-Dropout Linear Regulator

Features

- Input Voltage Range: 2.4 V to 5.5 V
- Output Voltage Options:
  - Fixed Voltage: 1.2 V, 1.8 V, 2.5 V, 2.8 V, 3 V, 3.3 V
  - Adjustable Voltage: 0.8 V to 5 V
- High Output Accuracy:
  - ±1% Typical Under Room Temperature
  - ±2% Through Operating Conditions
- Maximum Output Current: 500 mA
- Low Dropout Voltage: 400 mV at 500 mA
- Low Quiescent Current and Shutdown Current
- Foldback Current Limit and Thermal Protection
- Stable with 2.2-µF Ceramic Capacitor
- Inrush Input Current Limitation During Start-up
- Thermal Shutdown Protection
- Junction Temperature Range: −40°C to +125°C
- Package Options: SOT23-5, SOT89-3, DFN1×1-4

Applications

- Handheld Devices with Battery Power Supply
- POS
- Video Surveillance
- Wireless and IoT modules

Description

The TPL740 is a series of high-performance and low-dropout linear regulators. The TPL740 series supports a maximum 500-mA output current with low-quiescent current and high PSRR. The TPL740 series is stable with ceramic output capacitors from 2.2 µF to 10 µF.

The TPL740 series has a high PSRR with 60 dB at 1 kHz. This feature makes the TPL740 series very suitable for power-sensitive applications with high noise from the previous stage power supply. A quiescent current of as low as 49 µA and only 20-nA shutdown current make the TPL740 series ideal for portable devices with battery power supplies. The current limit foldback and thermal overload protection circuits improves the reliability under heavy load conditions.

The TPL740 series provides several output voltage options including the fixed and adjustable versions with ±2% output voltage accuracy over operating conditions. The TPL740 series is guaranteed over the junction temperature range from −40°C to +125°C.

Typical Application Circuit

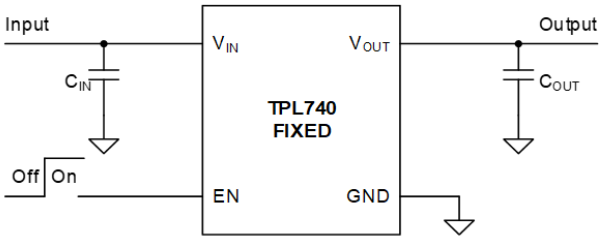

Figure 1. TPL740 Fixed Output Voltage

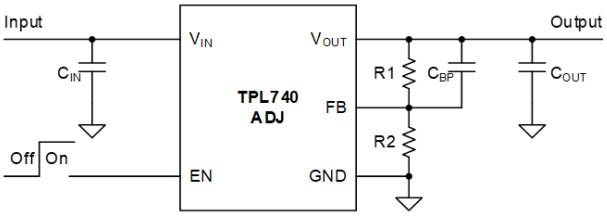

Figure 2. TPL740 Adjustable Output Voltage

Table of Contents

Features 1
Applications 1
Description 1
Typical Application Circuit 1
Product Family Table 3
Revision History 4
Pin Configuration and Functions 5
Specifications 6
Absolute Maximum Ratings 6
ESD, Electrostatic Discharge Protection 6
Recommended Operating Conditions 6
Thermal Information 6
Electrical Characteristics 8
Typical Performance Characteristics 10
Detailed Description 12
Overview 12
Functional Block Diagram 12
Feature Description 12
Application and Implementation 14
Application Information 14
Typical Application 14
Layout 16
Layout Guideline 16
Tape and Reel Information 17
Package Outline Dimensions 19
SOT23-5 19
SOT89-3 20
DFN1×1-4 21
Order Information 22
IMPORTANT NOTICE AND DISCLAIMER 23

Product Family Table

Order Number	Output Voltage (V)	Package
TPL740ADJ-5TR	Adjustable (0.8 V ~ 5 V)	SOT23-5
TPL740F12-5TR	Fixed 1.2 V	SOT23-5
TPL740F18-5TR	Fixed 1.8 V	SOT23-5
TPL740F25-5TR	Fixed 2.5 V	SOT23-5
TPL740F28-5TR	Fixed 2.8 V	SOT23-5
TPL740F30-5TR	Fixed 3.0 V	SOT23-5
TPL740F33-5TR	Fixed 3.3 V	SOT23-5
TPL740F33-89TR	Fixed 3.3 V	SOT89-3
TPL740F33-FR	Fixed 3.3 V	DFN1×1-4

Revision History

Date	Revision	Notes
2018-08-28	Rev.Pre.0	Preliminary version.
2018-11-26	Rev.A.0	Initial released version.
2019-02-11	Rev.A.1	1. Added voltage options of 1.5 V, 2.7 V, and 2.9 V. 2. Added the link to Figure 11 and Figure 12.
2019-08-08	Rev.A.2	Added the max limit of the item: I_{GND}, I_{SHDN}, UVLO, Load regulation, and V_{DO}.
2020-08-15	Rev.A.3	1. Changed the “Soft-start Limits Input Current Surge During Enable” to “Inrush Input Current Limitation During Start-up”. 2. Added the description of “Short-Circuit Protection”.
2021-03-09	Rev.A.4	1. Corrected the typical value of the current limit in the Feature Description. 2. Added Tape and Reel Information. 3. Updated Junction Temperature Range.
2022-05-15	Rev.A.5	Added Tape and Reel Information of the SC70-5 and DFN1×1-4 package.
2024-10-25	Rev.A.6	1. Updated to a new datasheet format. 2. Removed voltage options of 1.5 V, 2.7 V, and 2.9 V. 3. Removed voltage options of SC70-5 package. 4. Updated recommended C_{BP} range for adjustable output version.

Pin Configuration and Functions

TPL740 Series
SOT23-5
Top View

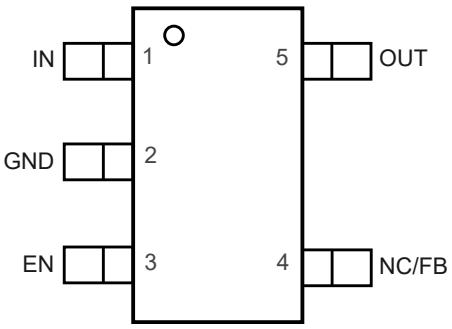

TPL740 Series
SOT89-3
Top View

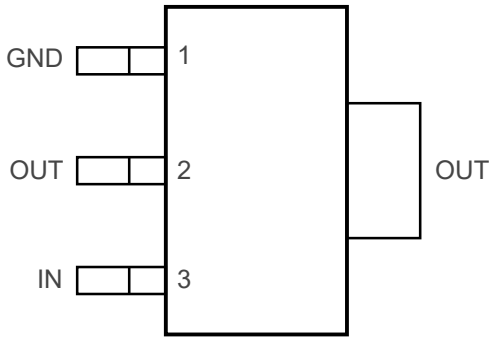

TPL740 Series
DFN1×1-4Top View
Top View

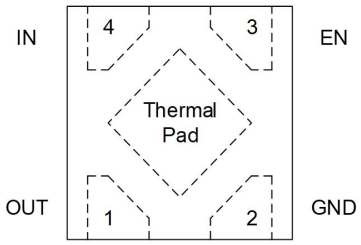

Table 1. Pin Functions

Pin No.			Name	I/O	Description
SOT23-5	SOT89-3	DFN1×1-4			
1	3	4	IN	I	The input voltage pin. Bypass IN to GND with a 1-μF or greater capacitor.
5	2	1	OUT	O	The regulated output voltage pin. Bypass OUT to GND with a 2.2-μF or greater capacitor.
3	-	3	EN	I	The regulator enable pin. Drive EN high to turn on the regulator; drive EN low to turn off the regulator. For the automatic startup, connect EN to IN directly.
2	1	2	GND	-	The ground reference pin. Connect the GND pin to the PCB ground plane directly.
4	-	-	NC	-	Not connected.
4	-	-	FB	I	The output feedback pin (adjustable version only). Connect to a resistor divider to adjust the output voltage. And connect CBP with capacitance from 1 nF to 200 nF between FB and OUT.

(1) The thermal pad must be connected to the PCB ground plane to maximize the thermal performance.

Specifications

Absolute Maximum Ratings

Parameter		Min	Max	Unit
V_{IN}, V_{EN}	Input Voltage	−0.3	6	V
V_{OUT}	Output Voltage	−0.3	6	V
V_{FB}	Feedback Voltage (Adjustable Version only)	−0.3	6	V
T_J	Maximum Junction Temperature	−40	150	°C
T_{STG}	Storage Temperature Range	−65	150	°C
T_L	Lead Temperature (Soldering, 10 sec)		260	°C

(1) Stresses beyond those listed under Absolute Maximum Ratings may cause permanent damage to the device. Exposure to any Absolute Maximum Rating condition for extended periods may affect device reliability and lifetime.
(2) All voltage values are with respect to GND.

ESD, Electrostatic Discharge Protection

Symbol	Parameter	Condition	Minimum Level	Unit
HBM	Human Body Model ESD	ANSI/ESDA/JEDEC JS-001 (1)	±8	kV
CDM	Charged Device Model ESD	ANSI/ESDA/JEDEC JS-002 (2)	±2	kV

(1) JEDEC document JEP155 states that 500-V HBM allows safe manufacturing with a standard ESD control process.
(2) JEDEC document JEP157 states that 250-V CDM allows safe manufacturing with a standard ESD control process.

Recommended Operating Conditions

Parameter		Min	Max	Unit
V_{IN}	Input Voltage	2.4	5.5	V
V_{EN}	Enable Voltage	0	V_{IN}	V
V_{OUT}	Output Voltage	0	5	V
V_{FB}	Feedback Voltage (Adjustable Version Only)	0	V_{OUT}	V
I_{OUT}	Output Current	0	500	mA
C_{OUT}	Output Capacitor	2.2	10	μF
C_{BP}	Bypass Capacitor	1	200	nF
T_J	Operating Junction Temperature Range	−40	125	°C

Thermal Information

Package Type	θ_{JA}	θ_{JC}	Unit
SOT23-5	280	62	°C/W
SOT89-3	55	88	°C/W

Package Type	θ_{JA}	θ_{JC}	Unit
DFN1×1-4	210	110	°C/W

Electrical Characteristics

All test conditions: V_{IN} = $V_{OUT\ (NOM)}$ + 0.5 V or 2.4 V, whichever is greater; C_{OUT} = 2.2 µF, T_A = +25°C, unless otherwise noted.

Symbol	Parameter	Conditions	Min	Typ	Max	Unit
Supply Voltage and Current						
V_{IN}	Input Voltage Range		2.4		5.5	V
I_{GND}	Ground Pin Current	I_{OUT} = 0 mA		49	200	µA
		I_{OUT} = 100 mA		200	2000	µA
I_{SHDN}	Shutdown Current	EN = GND		0.02	2	nA
UVLO	V_{IN} Under-Voltage Lock-out	V_{IN} Rising	1.5	1.9	2.4	V
		Hysteresis		200		mV
Enable Input Voltage and Current						
$V_{IH\ (EN)}$	EN Logic-Input High Level (Enable)		1.2		V_{IN}	V
$V_{IL\ (EN)}$	EN Logic-Input Low Level (Disable)		0		0.4	V
I_{EN}	EN Pin Leakage Current	EN = 5 V		1	3	µA
Regulated Output Voltage and Current						
V_{OUT}	Output Voltage Accuracy	T_J = +25°C		1%		
		−40°C ≤ T_J ≤ +125°C	−2%		2%	
V_{FB}	Feedback Pin Voltage	ADJ Version Only	0.784	0.8	0.816	V
$\triangle V_{OUT}$	Line Regulation	V_{IN} = 2.4 V or $V_{OUT\ (NOM)}$ + 0.5 V to 5.5 V, or V_{IN} ≥2.4 V, I_{OUT} = 1 mA		1	5	mV
	Load Regulation	I_{OUT} = 1 mA to 500 mA		20	60	mV
V_{DO} (1)	Dropout Voltage	V_{IN} = 0.98 × $V_{OUT\ (NOM)}$, I_{OUT} = 100 mA		75	100	mV
		V_{IN} = 0.98 × $V_{OUT\ (NOM)}$, I_{OUT} = 300 mA		200	250	mV
		V_{IN} = 0.98 × $V_{OUT\ (NOM)}$, I_{OUT} = 500 mA		300	400	mV
I_{OUT}	Output Current	V_{OUT} in Regulation	0		500	mA
I_{CL}	Output Current Limit	V_{OUT} = 0.9 × $V_{OUT\ (NOM)}$	550	1000	1400	mA
Regulated Output Voltage and Current						
PSRR	Power Supply Rejection Ratio (Fixed Version)	I_{OUT} = 100 mA, f = 1 kHz		60		dB
		I_{OUT} = 100 mA, f = 100 kHz		40		dB
		I_{OUT} = 100 mA, f = 1 MHz		40		dB
	Power Supply Rejection Ratio (ADJ Version)	I_{OUT} = 100 mA, f = 1 kHz, C_{BP} = 100 nF		65		dB
		I_{OUT} = 100 mA, f = 100 kHz, C_{BP} = 100 nF		60		dB

Symbol	Parameter	Conditions	Min	Typ	Max	Unit
PSRR	Power Supply Rejection Ratio (ADJ Version)	I_{OUT} = 100 mA, f = 1 MHz, C_{BP} = 100 nF		45		dB
V_N	Output Noise Voltage (Fixed Version)	I_{OUT} = 100 mA, BW = 100 Hz to 80 kHz		130		μV_{RMS}
	Output Noise Voltage (ADJ Version)	I_{OUT} = 100 mA, BW = 100 Hz to 80 kHz, C_{BP} = 100 nF		40		μV_{RMS}
T_{STR} (2)	Start-up Time (Fixed Version)	I_{OUT} = 500 mA, C_{OUT} = 2.2 µF		150		µs
	Start-up Time (ADJ Version)	I_{OUT} = 500 mA, C_{OUT} = 2.2 µF, C_{BP} = 100 nF		15		ms
Temperature Range						
T_{SD}	Thermal Shutdown Temperature			170		ºC
	Thermal Shutdown Hysteresis			30		ºC

(1) Dropout voltage is the minimum input-to-output voltage differential needed to maintain regulation at a specified output current. In dropout, the output voltage is equal to $V_{IN} - V_{DROPOUT}$.

(2) The start-up time from EN assertion to 0.98 × $V_{OUT(NOM)}$.

Typical Performance Characteristics

All test conditions: V_{IN} = $V_{OUT\ (NOM)}$ + 0.5 V or 2.4 V, whichever is greater; C_{OUT} = 2.2 µF, T_A = +25℃, unless otherwise noted.

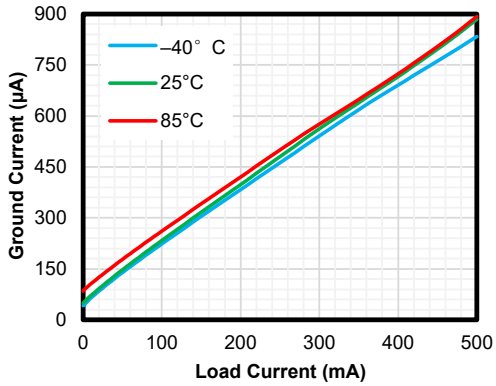

Figure 3. Quiescent Current vs. Output Current

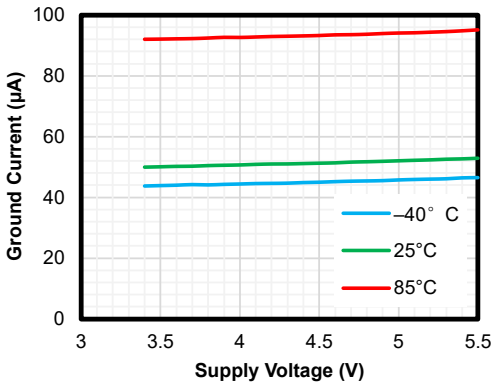

Figure 4. Quiescent Current vs. Input Voltage

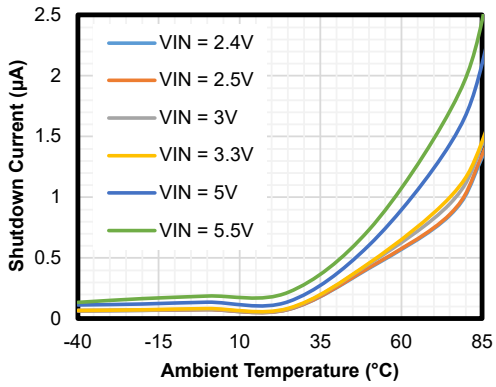

Figure 5. Shutdown Current vs. Ambient Temperature

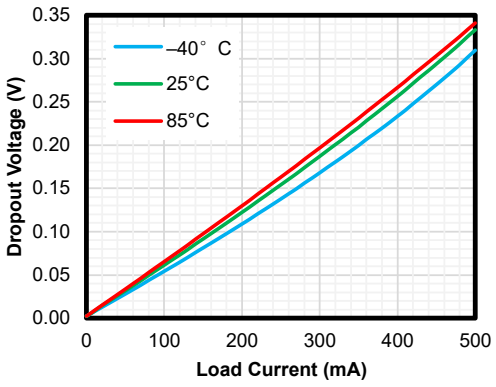

Figure 6. Dropout Voltage vs. Output Current

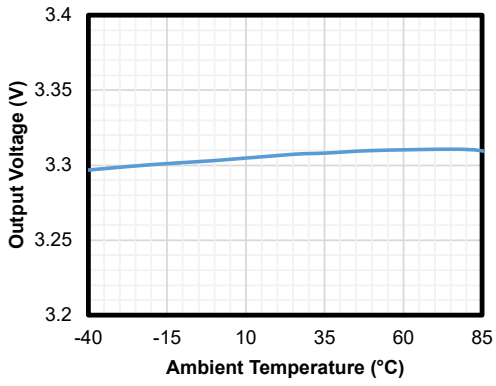

Figure 7. Output Accuracy vs. Ambient Temperature

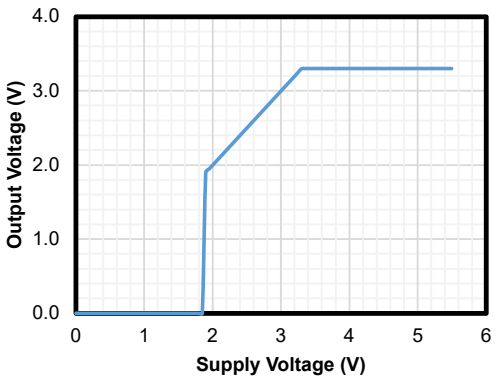

Figure 8. Output Voltage vs. Supply Voltage

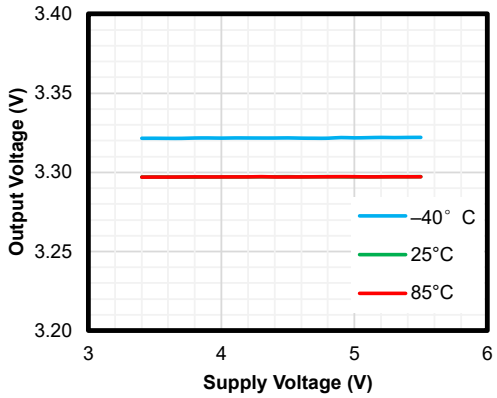

Figure 9. Line Regulation

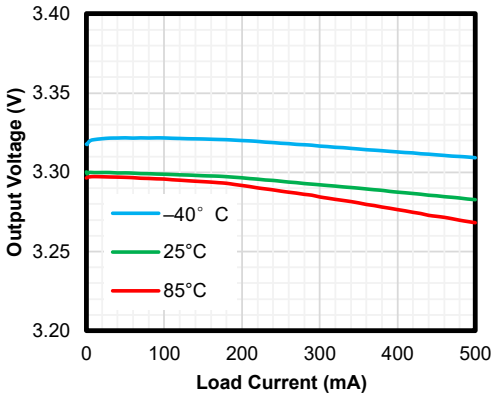

Figure 10. Load Regulation

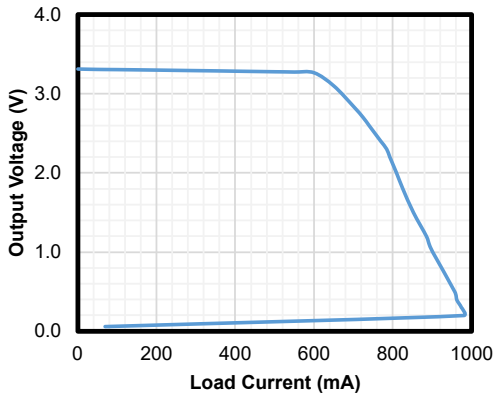

Figure 11. Foldback Current Limit

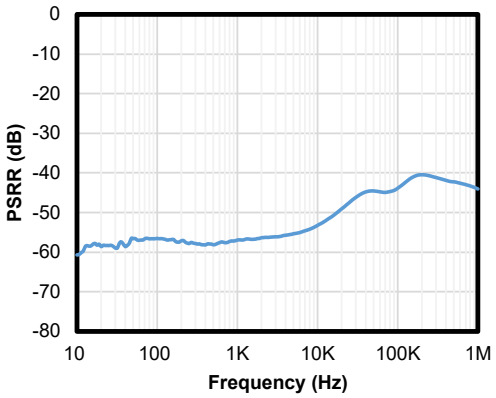

Figure 12. PSRR

Detailed Description

Overview

The TPL740 is a series of 500-mA high PSRR, low-dropout linear regulators with a very low quiescent current. It operates from 2.4 V to 5.5 V and consumes a quiescent current of 49 μA at no load and only 20 nA in shutdown mode.

The TPL740 series is available in fixed voltage versions of 1.2 V, 1.8 V, 2.5 V, 2.8 V, 3 V, and 3.3 V, and adjustable voltage versions of 0.8 V to 5 V with ±2% output voltage accuracy over operating conditions.

Functional Block Diagram

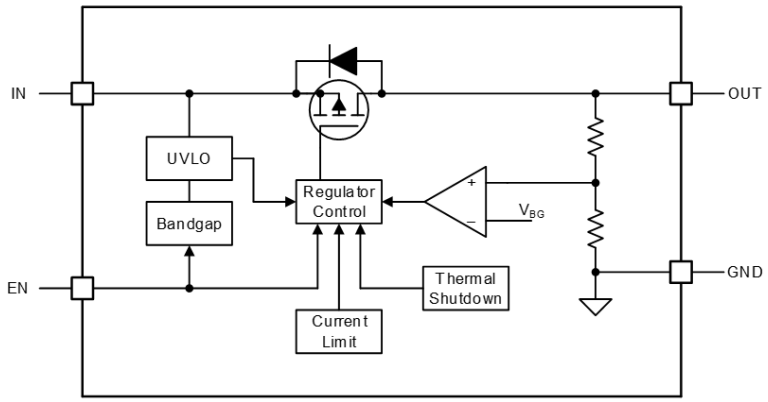

Figure 13. TPL740 Series Fixed Output Version

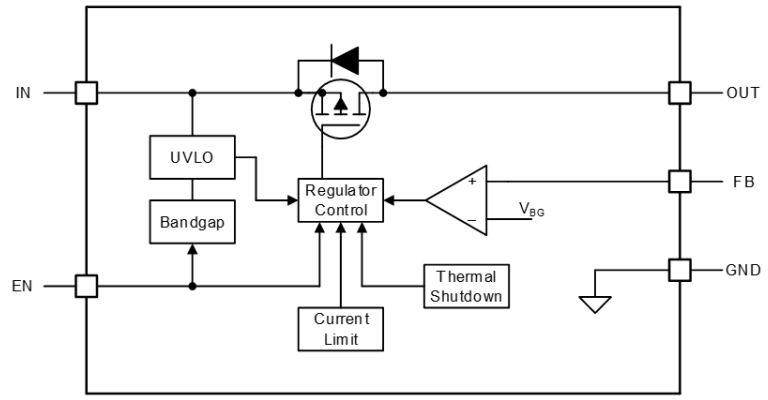

Figure 14. TPL740 Series Adjustable Output Version

Feature Description

Enable

The enable pin (EN) is active high. Connect this pin to the GPIO of an external processor or digital logic control circuit to enable and disable the device. Or connect this pin to the IN pin for self-bias applications.

Under-Voltage Lockout (UVLO)

The TPL740 series uses an under-voltage lockout circuit (UVLO = 1.9 V) to keep the output shut off until the internal circuitry operates properly.

Regulated Output Voltage

The TPL740 series is available in fixed voltage versions of 1.2 V, 1.8 V, 2.5 V, 2.8 V, 3 V, and 3.3 V. When the input voltage is higher than $V_{OUT\ (NOM)}$ + V_{DO} or 2.4 V, the output pin is the regulated output based on the selected voltage version. When the input voltage falls below $V_{OUT\ (NOM)}$ + V_{DO} or 2.4 V, the output pin tracks the input voltage minus the dropout voltage based on the load current. When the input voltage drops below the UVLO threshold, the output keeps shut off.

Adjustable Output Voltage

The TPL740 series is also available in adjustable voltage versions of 0.8 V to 5 V by selecting suitable external resistor dividers. Use Equation 1 to calculate the output voltage (V_{FB} = 0.8 V). Suggest selecting the resistor value of (R1 + R2) between 10 kΩ and 100 kΩ.

$$V_{OUT} = V_{FB} \times \left(1 + \frac{R1}{R2}\right) \quad (1)$$

Current Limit

The TPL740 series integrates an internal foldback current limit that helps to protect the regulator during fault conditions. When the output is shorted, the LDO supplies a typical current of 1000 mA. The output voltage is not regulated when the device is in current limit and is $V_{OUT} = I_{CL} \times R_{LOAD}$.

Short-Circuit Protection

The TPL740 series integrates the short-circuit protection. When the output pin is shorted to ground or forced to a voltage below 0.2 V, the output current of the TPL740 series is limited to a typical value of 150 mA.

Thermal Shutdown

During normal operation, the LDO junction temperature should not exceed 125°C. When the junction temperature exceeds the thermal shutdown threshold, the LDO shuts down the output immediately. When the junction temperature falls below the thermal shutdown threshold minus thermal shutdown hysteresis, the output turns on again.

Application and Implementation

> Note
>
> Information in the following application sections is not part of the 3PEAK's component specification and 3PEAK does not warrant its accuracy or completeness. 3PEAK's customers are responsible for determining suitability of components for their purposes. Customers should validate and test their design implementation to confirm system functionality.

Application Information

The TPL740 is a series of 500-mA high PSRR, low-dropout linear regulators with a low quiescent current. The following application schematic shows a typical usage of the TPL740 series.

Typical Application

Figure 15 and Figure 16 show the typical application schematic of the TPL740 series.

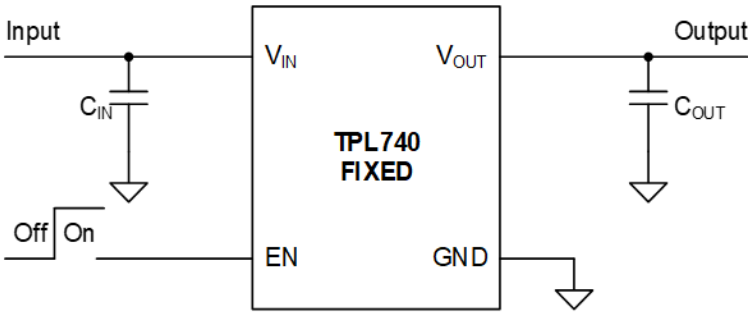

Figure 15. TPL740 Fixed Output Voltage

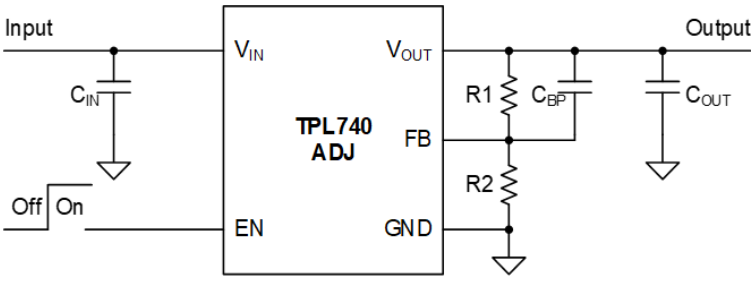

Figure 16. TPL740 Adjustable Output Voltage

Input Capacitor and Output Capacitor

3PEAK recommends adding a 1-μF or greater capacitor with a 0.1-μF bypass capacitor in parallel at the IN pin to keep the input voltage stable. The voltage rating of the capacitors must be greater than the maximum input voltage.

To ensure loop stability, the TPL740 series requires an output capacitor with a minimum effective capacitance value of 2.2 μF. 3PEAK recommends selecting an X5R- or X7R-type ceramic capacitor with low ESR over temperature.

The TPL740 adjustable output version requires a bypass capacitor C_{BP} with a capacitance value from 1 nF to 200 nF to ensure loop stability.

Both input capacitors and output capacitors must be placed as close to the pins of the device as possible.

Power Dissipation

During normal operation, the LDO junction temperature should not exceed 125°C. Use the below equations to calculate the power dissipation and estimate the junction temperature.

The power dissipation can be calculated using Equation 2.

$$P_D = (V_{IN} - V_{OUT}) \times I_{OUT} + V_{IN} \times I_{GND} \quad (2)$$

The junction temperature can be estimated using Equation 3. θ_{JA} is the junction-to-ambient thermal resistance (See Thermal Information).

$$T_J = T_A + P_D \times \theta_{JA} \quad (3)$$

Layout

Layout Guideline

- Both input capacitors and output capacitors must be placed as close to the pins of the device as possible.
- It is recommended to bypass the input pin to ground with a 0.1-μF bypass capacitor. The loop area formed by the bypass capacitor connection, the IN pin, and the GND pin of the system must be as small as possible.
- It is recommended to use wide trace lengths or thick copper weight to minimize I×R drop and heat dissipation.

Tape and Reel Information

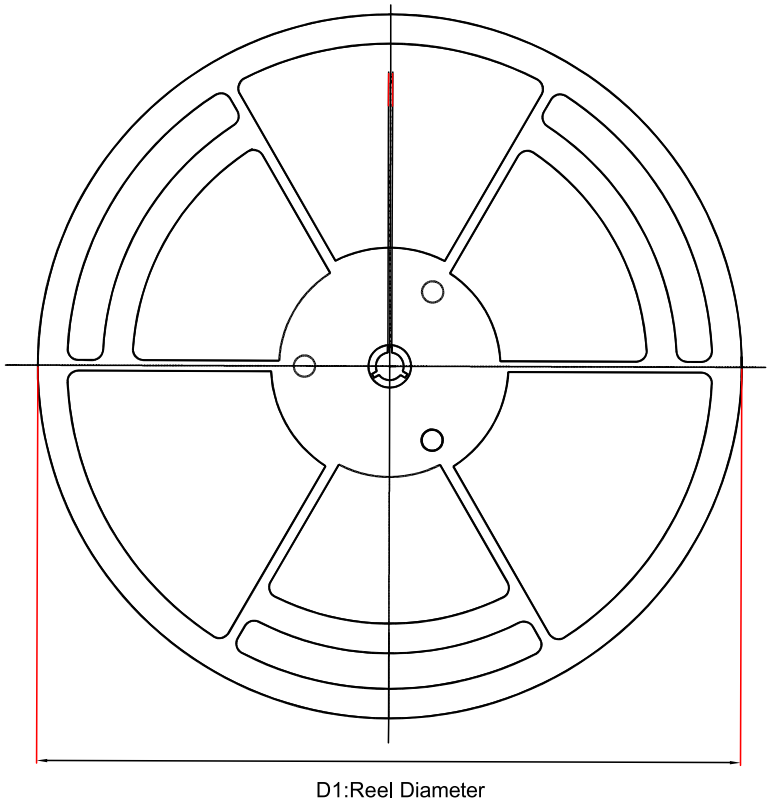

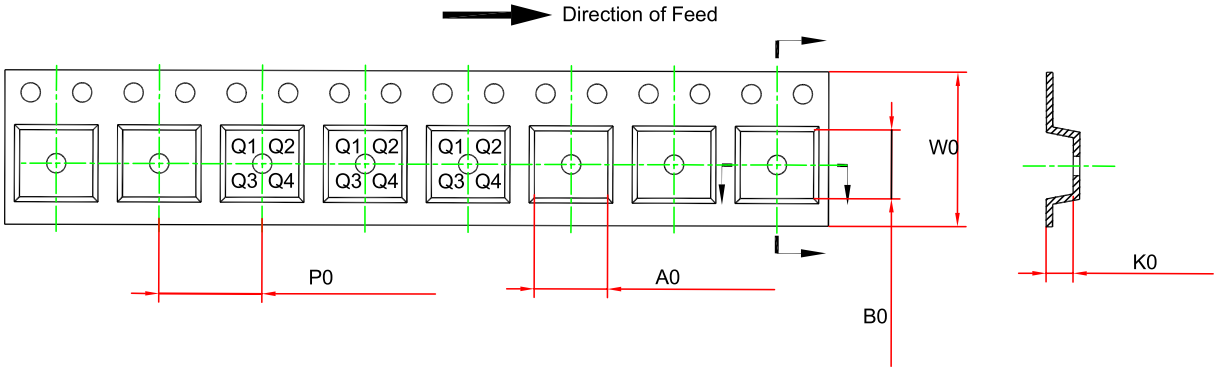

Order Number	Package	D1 (mm)	W1 (mm)	A0 (mm)	B0 (mm)	K0 (mm)	P0 (mm)	W0 (mm)	Pin1 Quadrant
TPL740ADJ-5 TR	SOT23-5	180.0	13.1	3.2	3.2	1.4	4.0	8.0	Q3
TPL740Fxx-5TR	SOT23-5	180.0	13.1	3.2	3.2	1.4	4.0	8.0	Q3
TPL740F33-89 TR	SOT89-3	330	17.6	4.8	4.4	1.8	8.0	12.0	Q3

Order Number	Package	D1 (mm)	W1 (mm)	A0 (mm)	B0 (mm)	K0 (mm)	P0 (mm)	W0 (mm)	Pin1 Quadrant
TPL740F33-FR	DFN1×1-4	180.0	10.0	1.16	1.16	0.5	2.0	8.0	Q1

(1) The output voltage value, xx = 12 to 33, e.g., 33 means 3.3-V output voltage.

Package Outline Dimensions

SOT23-5

Package Outline Dimensions S5T(SOT23-5-A)

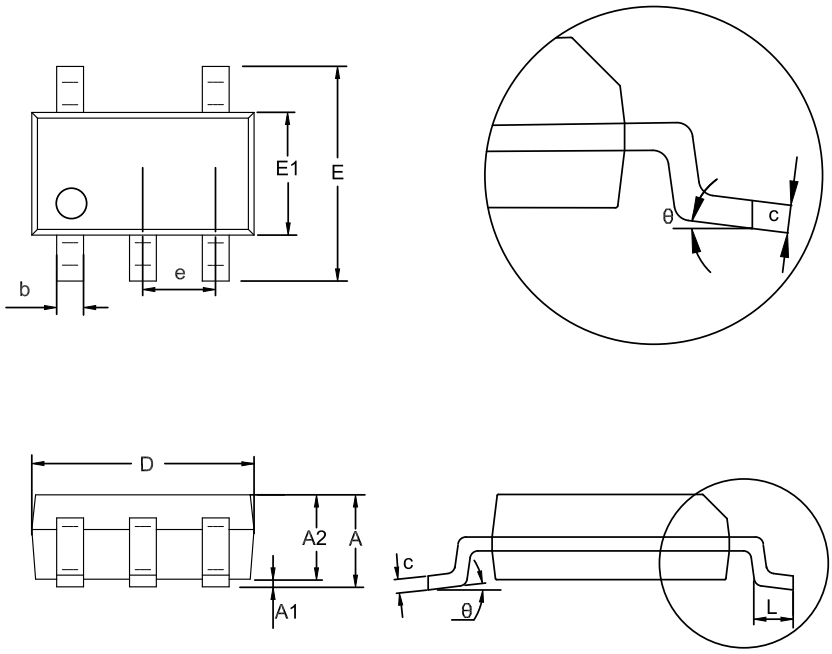

Symbol	Dimensions In Millimeters		Dimensions In Inches	
	MIN	MAX	MIN	MAX
A	1.050	1.250	0.041	0.049
A1	0.000	0.150	0.000	0.006
A2	1.000	1.200	0.039	0.047
b	0.280	0.500	0.011	0.020
c	0.100	0.230	0.004	0.009
D	2.820	3.020	0.111	0.119
E	2.600	3.000	0.102	0.118
E1	1.500	1.720	0.059	0.068
e	0.950 BSC		0.037 BSC	
L	0.300	0.600	0.012	0.024
θ	0	8°	0	8°

NOTES

1. Do not include mold flash or protrusion.
2. This drawing is subject to change without notice.

SOT89-3

Package Outline Dimensions 89T(SOT89-3-A)

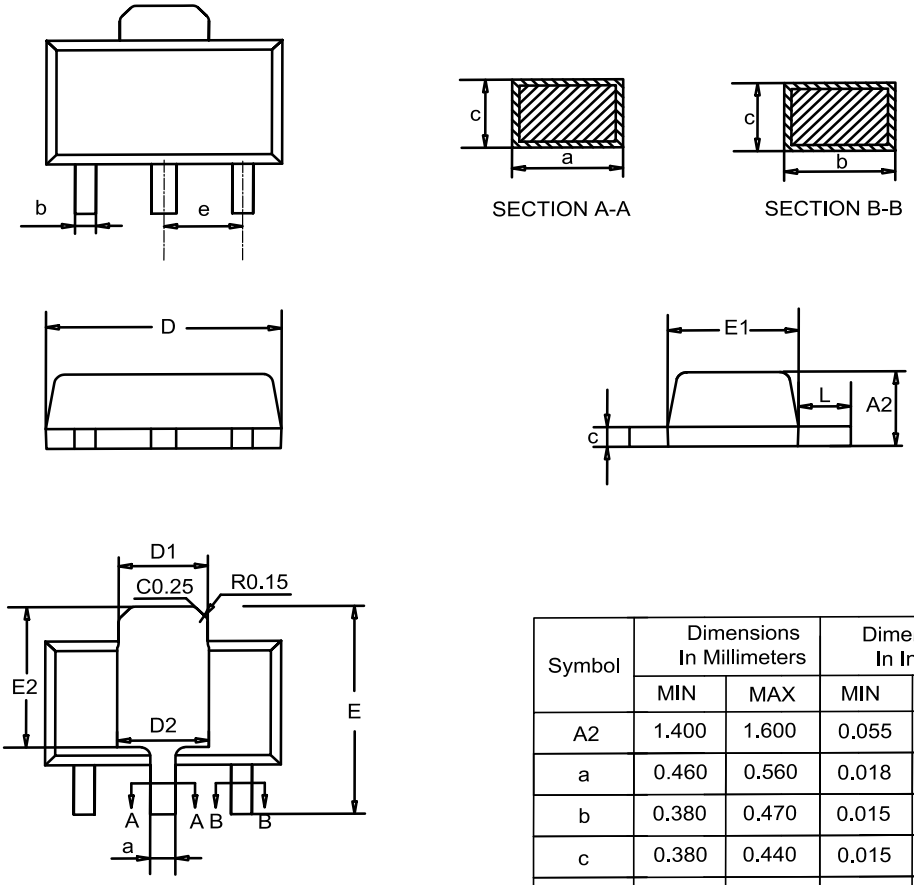

Symbol	Dimensions In Millimeters		Dimensions In Inches	
	MIN	MAX	MIN	MAX
A2	1.400	1.600	0.055	0.063
a	0.460	0.560	0.018	0.022
b	0.380	0.470	0.015	0.019
c	0.380	0.440	0.015	0.017
D	4.400	4.600	0.173	0.181
D1	1.600	1.830	0.063	0.072
E	3.950	4.250	0.156	0.167
E1	2.400	2.600	0.094	0.102
e	1.500 BSC		0.059 BSC	
D2	1.600	1.900	0.063	0.075
E2	2.700	3.100	0.106	0.122
L	0.890	1.200	0.035	0.047

NOTES

1. Do not include mold flash or protrusion.
2. This drawing is subject to change without notice.

DFN1×1-4

Package Outline Dimensions DF1(DFN1X1-4-A)

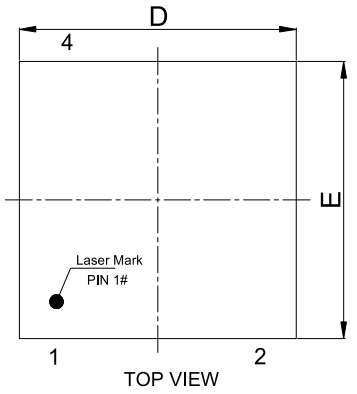

TOP VIEW

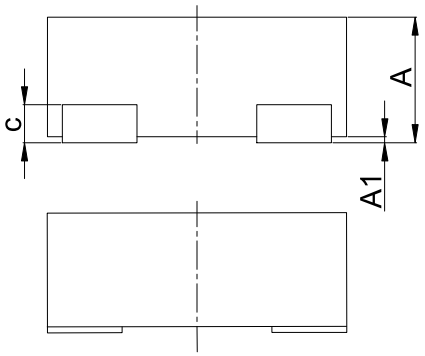

SIDE VIEW

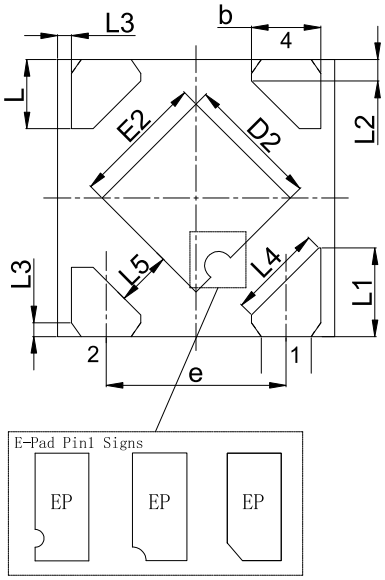

BOTTOM VIEW

Symbol	Dimensions In Millimeters		Dimensions In Inches	
	MIN	MAX	MIN	MAX
A	0.350	0.400	0.014	0.016
A1	0.000	0.050	0.000	0.002
b	0.200	0.300	0.008	0.012
c	0.070	0.170	0.003	0.007
D	0.950	1.050	0.037	0.041
D2	0.430	0.530	0.017	0.021
E	0.950	1.050	0.037	0.041
E2	0.430	0.530	0.017	0.021
e	0.650 BSC		0.026 BSC	
L	0.200	0.300	0.008	0.012
L1	0.270	0.370	0.011	0.015
L2	0.077 BSC		0.003 BSC	
L3	0.050 BSC		0.002 BSC	
L4	0.340 BSC		0.013 BSC	
L5	0.200 BSC		0.008 BSC	

NOTES

1. Do not include mold flash or protrusion.
2. This drawing is subject to change without notice.
3. The many types of E-pad Pin1 signs may appear in the product.

Order Information

Order Number	Operating Temperature Range	Package	Marking Information	MSL	Transport Media, Quantity	Eco Plan
TPL740ADJ-5TR	−40 to 125°C	SOT23-5	L2A	3	Tape and Reel, 3,000	Green
TPL740F12-5TR	−40 to 125°C	SOT23-5	L2D	3	Tape and Reel, 3,000	Green
TPL740F18-5TR	−40 to 125°C	SOT23-5	L2F	3	Tape and Reel, 3,000	Green
TPL740F25-5TR	−40 to 125°C	SOT23-5	L2G	3	Tape and Reel, 3,000	Green
TPL740F28-5TR	−40 to 125°C	SOT23-5	L2H	3	Tape and Reel, 3,000	Green
TPL740F30-5TR	−40 to 125°C	SOT23-5	L2I	3	Tape and Reel, 3,000	Green
TPL740F33-5TR	−40 to 125°C	SOT23-5	L2J	3	Tape and Reel, 3,000	Green
TPL740F33-89TR	−40 to 125°C	SOT89-3	L2J	3	Tape and Reel, 4,000	Green
TPL740F33-FR	−40 to 125°C	DFN1×1-4	L2J	3	Tape and Reel, 12,000	Green

Green: 3PEAK defines "Green" to mean RoHS compatible and free of halogen substances.

IMPORTANT NOTICE AND DISCLAIMER

Copyright© 3PEAK 2012-2024. All rights reserved.

Trademarks. Any of the 思瑞浦 or 3PEAK trade names, trademarks, graphic marks, and domain names contained in this document /material are the property of 3PEAK. You may NOT reproduce, modify, publish, transmit or distribute any Trademark without the prior written consent of 3PEAK.

Performance Information. Performance tests or performance range contained in this document/material are either results of design simulation or actual tests conducted under designated testing environment. Any variation in testing environment or simulation environment, including but not limited to testing method, testing process or testing temperature, may affect actual performance of the product.

Disclaimer. 3PEAK provides technical and reliability data (including data sheets), design resources (including reference designs), application or other design recommendations, networking tools, security information and other resources "As Is". 3PEAK makes no warranty as to the absence of defects, and makes no warranties of any kind, express or implied, including without limitation, implied warranties as to merchantability, fitness for a particular purpose or non-infringement of any third-party's intellectual property rights. Unless otherwise specified in writing, products supplied by 3PEAK are not designed to be used in any life-threatening scenarios, including critical medical applications, automotive safety-critical systems, aviation, aerospace, or any situations where failure could result in bodily harm, loss of life, or significant property damage. 3PEAK disclaims all liability for any such unauthorized use.

This page intentionally left blank

ENTEGRECİ

Bu belge www.entegreci.com üzerinden sunulmaktadır.

Elektronik komponent tedarikinde Entegreci

Entegreci, Eskişehir merkezli, Türkiye geneline satış yapan bir elektronik komponent mağazasıdır. Entegreler (IC), mikrodenetleyiciler, transistörler, diyotlar, pasif elemanlar, konnektörler, modüller ve geliştirme kartları tek adetten seri üretim adetlerine kadar satılır. Ürün sayfalarında güncel stok durumunu, fiyatı ve datasheet bağlantısını bulabilirsiniz.

Parça koduyla arama

Üretici parça numarasını yazın; stok ve fiyatı hemen görün.

www.entegreci.com

Ürün kategorileri

Entegreden kapasitöre tüm elektronik komponent kategorileri.

Kategorilere göz atın

Üreticiler

Aradığınız üreticinin ürünlerini tek sayfada inceleyin.

Üreticileri görün

Toplu alım ve teklif

Listede olmayan ya da yüksek adetli parçalar için teklif isteyin.

Teklif isteyin

www.entegreci.com | **destek@entegreci.com** | **0850 305 90 34**

Entegreci is an online electronic components store based in Türkiye. Search by manufacturer part number to see stock, prices and datasheets for integrated circuits, microcontrollers, transistors, passive components and connectors, or request a quote for parts that are not listed.

Bu sayfa Entegreci tarafından eklenmiştir. Belgenin önceki sayfaları asıl yayıncısına aittir ve içeriği değiştirilmemiştir; en güncel sürüm için belgenin yayıncısına başvurun.