42-V 300-mA Wide-input Ultra-low Quiescent Current Low-Dropout Linear Regulator

Features

- Qualified for Automotive Applications
  - AEC-Q100 Grade 1, T_A: −40°C to +125°C
  - Junction Temperature, T_J: −40°C to +150°C
- Input Voltage: 3 V to 42 V
- Output Voltage:
  - Fixed 5 V and 3.3 V
- ±2.5% Output Accuracy Over Line Regulation, Load Regulation, and Operating Temperature Range
- Low Current Consumption:
  - 400-nA Shutdown Current
  - 3-μA Typical Quiescent Current
- 300-mA Maximum Output Current
- Low Dropout Voltage: 720 mV Maximum at 200 mA Load Current
- Stable with 1-μF to 200-μF Output Capacitor with ESR Range from 0.001 Ω to 10 Ω
- Integrated Protection:
  - Over-Current Protection
  - Over-Temperature Protection
- Package Options:
  - DFN3X3-8
  - EMSOP8
  - SOT223-3

Applications

- Automotive Clusters and Infotainment
- Automotive Headlights and Interior Lighting
- Automotive Domain Control
- Automotive BCM and Door Handler

Description

The TPL8031Q series supports operating with 3 V to 42 V (45-V maximum transient voltage). Operating with as low as 3 V allows the TPL8031Q to continue to work well during cold-crank and start-stop conditions.

The TPL8031Q products are 3-μA ultra-low quiescent low dropout voltage linear regulators with 300-mA maximum output current capability.

With the above features, the TPL8031Q products are the optimal solutions for powering the MCU, CAN/LIN transceivers in the always-on applications, and the battery-connected applications in the automotive systems.

The TPL8031Q series provides fixed 5-V and 3.3-V output voltage options, and the TPL8031Q series supports a wide range of output capacitors from 1 μF to 200 μF with an ESR range from 0.001 Ω to 10 Ω. Also, the TPL8031Q series integrates over-current protection and over-temperature protection.

The TPL8031Q series operates in the ambient temperature range from −40°C to +125°C. Additionally, the TPL8031Q series provides thermal-enhanced packages of DFN3X3-8, EMSOP8, and SOT223-3 to enable sustained operation despite significant dissipation across the device.

Typical Application Circuit

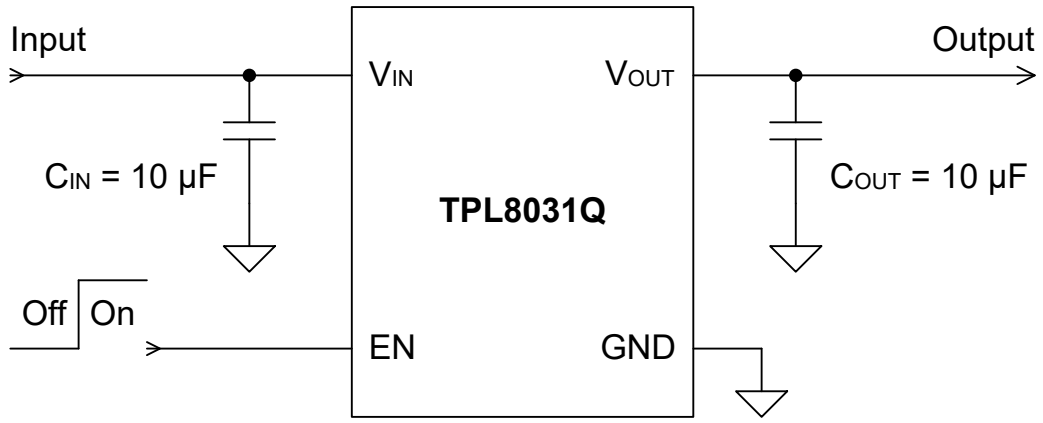

Table of Contents

Features 1
Applications 1
Description 1
Typical Application Circuit 1
Product Family Table 3
Revision History 3
Pin Configuration and Functions 4
Specifications 5
Absolute Maximum Ratings 5
ESD, Electrostatic Discharge Protection 5
Recommended Operating Conditions 5
Thermal Information 5
Electrical Characteristics 6
Typical Performance Characteristics 7
Detailed Description 11
Overview 11
Functional Block Diagram 11
Feature Description 11
Application and Implementation 13
Application Information 13
Typical Application 13
Layout 14
Layout Guideline 14
Tape and Reel Information 15
Package Outline Dimensions 17
DFN3X3-8 17
EMSOP8 18
SOT223-3 19
Order Information 20
IMPORTANT NOTICE AND DISCLAIMER 21

Product Family Table

Order Number	Output Voltage (V)	Package
TPL803133Q-DF6R-S	3.3 V	DFN3X3-8
TPL803150Q-DF6R-S	5.0 V	DFN3X3-8
TPL803133Q-EV1R-S	3.3 V	EMSOP8
TPL803150Q-EV1R-S	5.0 V	EMSOP8
TPL803133Q-ST4R-S	3.3 V	SOT223-3
TPL803150Q-ST4R-S	5.0 V	SOT223-3

Revision History

Date	Revision	Notes
2022-03-21	Rev.Pre.0	Preliminary Datasheet.
2023-04-28	Rev.Pre.1	Updated Pin Map of EMSOP8 Package.
2023-05-31	Rev.Pre.2	1. Updated Thermal Information 2. Updated Electrical Characteristics Table.
2023-06-15	Rev.A.0	Initial Released.
2025-08-26	Rev.A.1	The following updates are all about new formats or typo corrections. The actual product remains unchanged. • Added description to POD information required by packaging reference standards. • Updated the Tape and Reel Information.

Pin Configuration and Functions

DFN3X3-8 Package
Top View

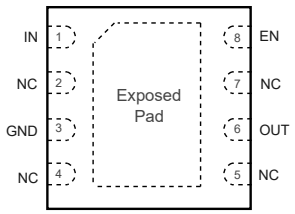

EMSOP8 Package
Top View

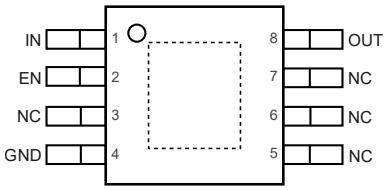

SOT223-3 Package
Top View

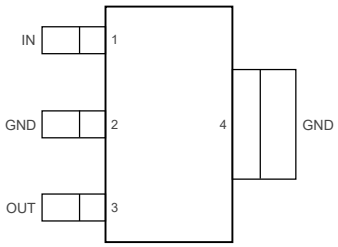

Table 1. Pin Functions: TPL8031Q-S

Pin Number			Pin Name	I/O	Description
DFN3X3-8	EMSOP8	SOT223-3			
8	2	–	EN	I	Regulator enable pin. Drive EN high to turn on the regulator; drive EN low to turn off the regulator.
3	4	2, 4	GND	I	Ground reference pin. Connect GND pin to PCB ground plane directly.
1	1	1	IN	I	Input voltage pin. Bypass IN to GND with a 1 μF or greater capacitor.
4, 5, 7	3, 5, 6, 7	–	NC	-	No connection.
6	8	3	OUT	O	Regulated output voltage pin. Bypass OUT to GND with a 1 μF or greater capacitor.

(1) Thermal Pad **MUST** be connected to PCB ground plane directly.

Specifications

Absolute Maximum Ratings

Parameter		Min	Max	Unit
EN, IN		−0.3	45	V
OUT		−0.3	6	V
T_J	Junction Temperature Range	−40	150	°C
T_{STG}	Storage Temperature Range	−65	150	°C
T_L	Lead Temperature (Soldering 10 sec)		260	°C

(1) Stresses beyond those listed under Absolute Maximum Ratings may cause permanent damage to the device. Exposure to any Absolute Maximum Rating condition for extended periods may affect device reliability and lifetime.
(2) All voltage values are with respect to GND.

ESD, Electrostatic Discharge Protection

Symbol	Parameter	Condition	Minimum Level	Unit
HBM	Human Body Model ESD	AEC Q100-002	±2	kV
CDM	Charged Device Model ESD	AEC Q100-011	±1	kV

Recommended Operating Conditions

Parameter		Min	Max	Unit
IN		3	42	V
EN		0	V_{IN}	V
C_{OUT}	Output Capacitor Requirements	1	200	μF
ESR	Output Capacitor ESR Requirements	0.001	10	Ω
T_A	Ambient Temperature Range	−40	125	°C
T_J	Junction Temperature Range	−40	150	°C

Thermal Information

Package Type	θ_{JA}	θ_{JB}	$\theta_{JC,top}$	$\theta_{JC,bottom}$	Unit
DFN3X3-8	45.0	42.0	88.8	10.7	°C/W
EMSOP8	45.6	43.3	95.2	12.8	°C/W
SOT223-3	65.0	40.0	60.0	15.0	°C/W

Electrical Characteristics

All test conditions: V_{IN} = 13.5 V, V_{EN} = 2 V, C_{IN} = C_{OUT} = 10 µF, I_{OUT} = 0.1 mA. T_A = −40°C to +125°C, T_J = −40°C to 150°C, unless otherwise noted.

Symbol	Parameter	Conditions	Min	Typ	Max	Unit
Supply Input Voltage and Current						
V_{IN}	Input Supply Voltage Range (1)		$V_{IN,MIN}$		42	V
UVLO	V_{IN} Under-Voltage Lockout Threshold	VIN rising, V_{EN} = 2 V, I_{OUT} = 200 mA		2.6	2.8	V
	Hysteresis			260		mV
I_{SD}	Shutdown Current	V_{EN} = 0 V		0.4	2	µA
I_Q	Quiescent Current	I_{OUT} = 0 mA		3	5.5	µA
		I_{OUT} = 0.1 mA		4	6.5	µA
Enable Input Voltage and Current						
$V_{IH,EN}$	EN Logic Input High (Enable)		1.4		V_{IN}	V
$V_{IL,EN}$	EN Logic Input Low (Disable)		0		0.7	V
I_{EN}	EN Pin Leakage Current	V_{EN} = 2 V to 42 V	−200		200	nA
Regulated Output Voltage and Current						
V_{OUT}	Output Accuracy	V_{IN} = 6 V to 42 V, I_{OUT} = 1 mA to 300 mA	−2.5%		2.5%	
ΔV_{OUT}	Line Regulation	V_{IN} = 6 V to 42 V, I_{OUT} = 10 mA		0.1		mV
	Load Regulation	I_{OUT} = 1 mA to 300 mA		5		mV
V_{DO}	Dropout Voltage (2)	I_{OUT} = 100 mA, V_{OUT} = 3.3 V		280	450	mV
		I_{OUT} = 200 mA, V_{OUT} = 3.3 V		580	900	mV
		I_{OUT} = 100 mA, V_{OUT} = 5 V		220	360	mV
		I_{OUT} = 200 mA, V_{OUT} = 5 V		440	720	mV
I_{OUT}	Output Current Range	V_{OUT} in regulation	0		300	mA
I_{CL}	Output Current Limit	V_{OUT} is forced to 0.9*$V_{OUT(NOM)}$	320	500	900	mA
t_{SU}	Start-Up Time (3)			2		ms
PSRR	Power Supply Rejection Ratio (3)	I_{OUT} = 10 mA, f = 1 kHz		65		dB
		I_{OUT} = 10 mA, f = 100 kHz		50		dB
		I_{OUT} = 10 mA, f = 1 MHz		40		dB
Temperature Range						
T_{SD}	Thermal Shutdown Threshold			175		°C
	Thermal Shutdown Hysteresis			20		°C

(1) $V_{IN,MIN}$ = 3 V or $V_{OUT(NOM)}$ + 1 V, whichever is greater.
(2) Dropout voltage is the minimum input to output voltage differential needed to maintain regulation at a specified output current. Dropout voltage is measured when the output voltage has dropped 100 mV from the nominal value. In dropout, the output voltage will be equal to (V_{IN} – V_{DO}).
(3) Not test during production.

Typical Performance Characteristics

All test conditions: V_{IN} = 13.5 V, V_{EN} = 2 V, C_{IN} = C_{OUT} = 10 µF, I_{OUT} = 0.1 mA. T_A = −40°C to +125°C, T_J = −40°C to 150°C, unless otherwise noted.

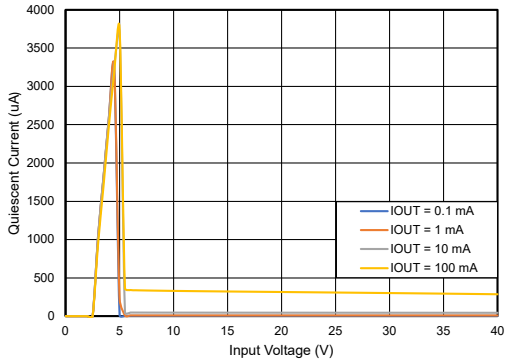

V_{OUT} = 5 V

Figure 1. Quiescent Current vs. Input Voltage

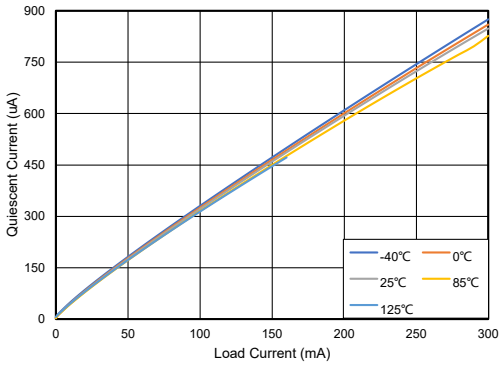

V_{OUT} = 5 V

Figure 2. Quiescent Current vs. Load Current

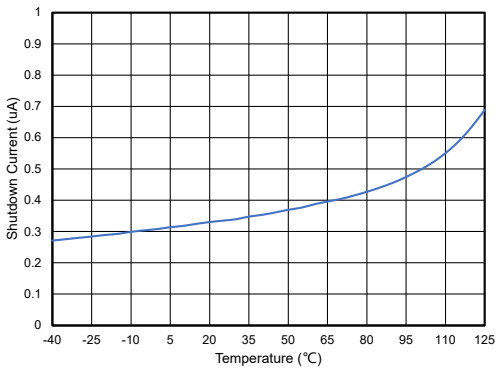

V_{EN} = 0 V

Figure 3. Shutdown Current vs. Ambient Temperature

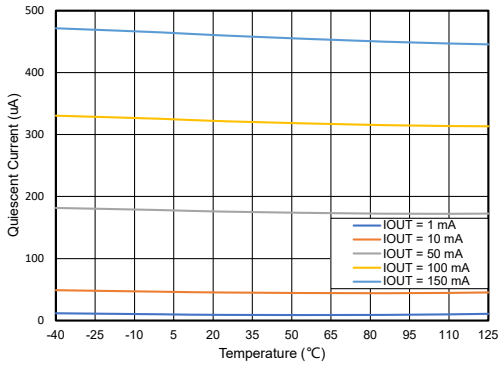

V_{OUT} = 5 V

Figure 4. Quiescent Current vs. Ambient Temperature

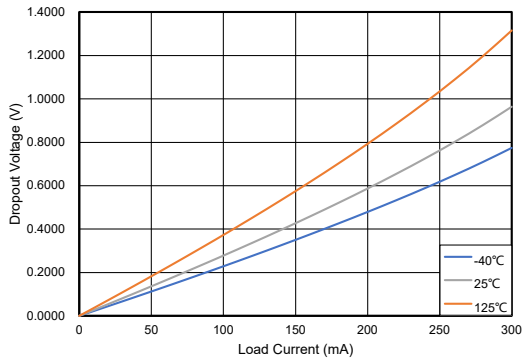

V_{OUT} = 3.3 V

Figure 5. Dropout Voltage vs. Load Current

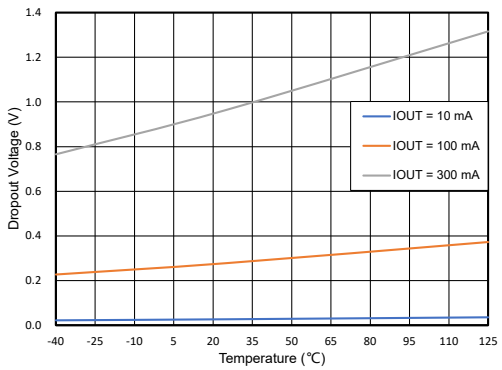

V_{OUT} = 5 V

Figure 6. Dropout Voltage vs. Ambient Temperature

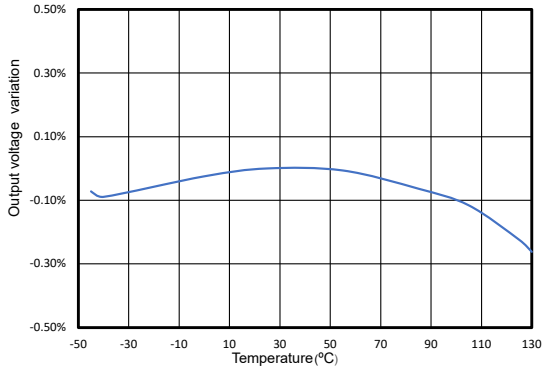

V_{OUT} = 5 V

Figure 7. Output Voltage Variation vs. Ambient Temperature

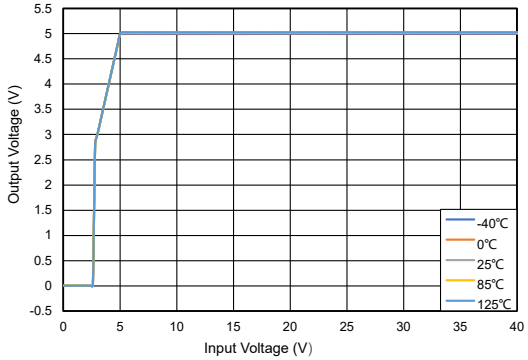

V_{OUT} = 5 V , I_{OUT} = 1 mA

Figure 8. Output Voltage vs. Input Voltage

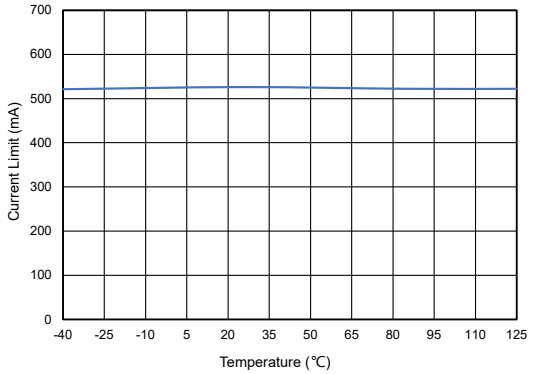

V_{OUT} = 5 V, force V_{OUT} = 0.9×V_{OUT}

Figure 9. Output Current Limit vs. Ambient Temperature

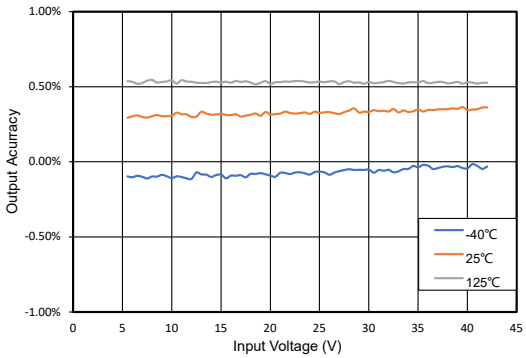

V_{OUT} = 5 V

Figure 10. Line Regulation

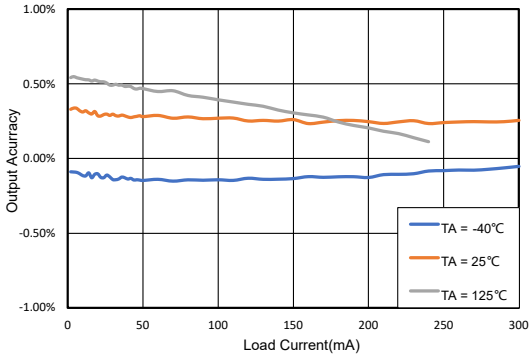

V_{OUT} = 5 V

Figure 11. Load Regulation

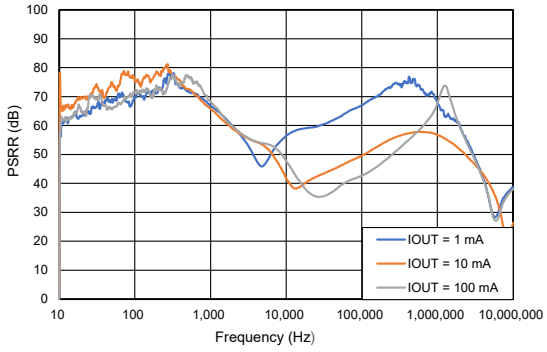

V_{OUT} = 5 V

Figure 12. PSRR

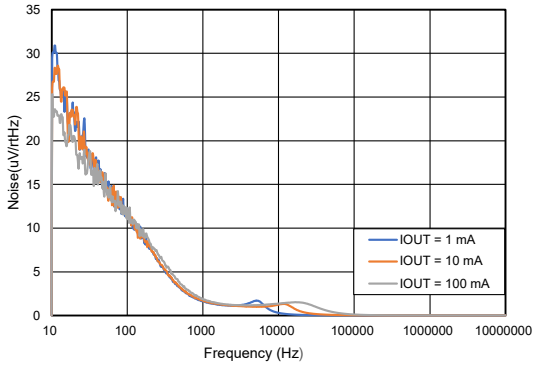

V_{OUT} = 5 V

Figure 13. Noise

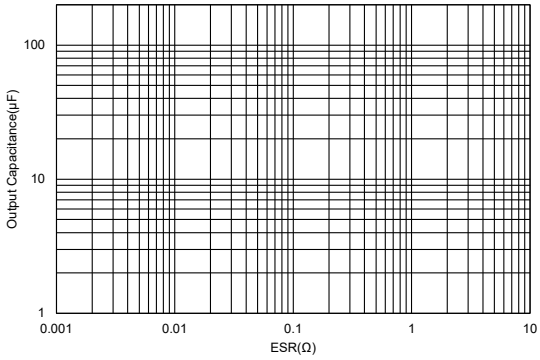

Output Capacitance and ESR stability range

Figure 14. Output Capacitance vs. ESR stability

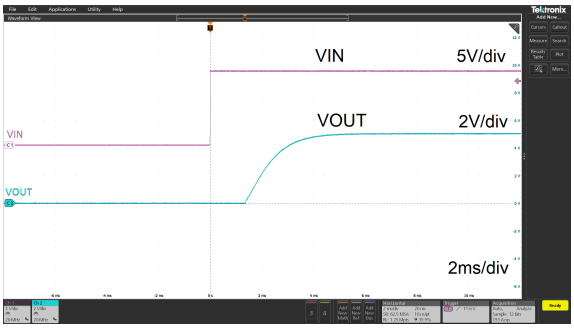

C_{OUT} = 1 µF, V_{IN} = 0 V to 13.5 V, V_{OUT} = 0 V to 5 V

Figure 15. Startup Waveform

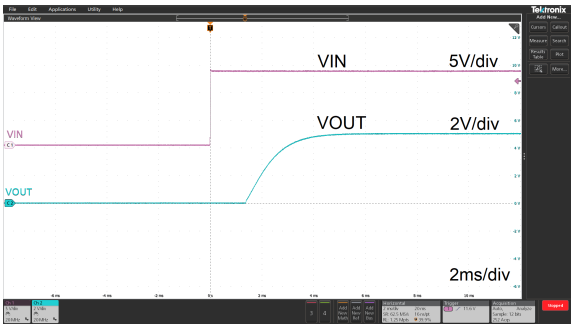

C_{OUT} = 10 µF, V_{IN} = 0 V to 13.5 V, V_{OUT} = 0 V to 5 V

Figure 16. Startup Waveform

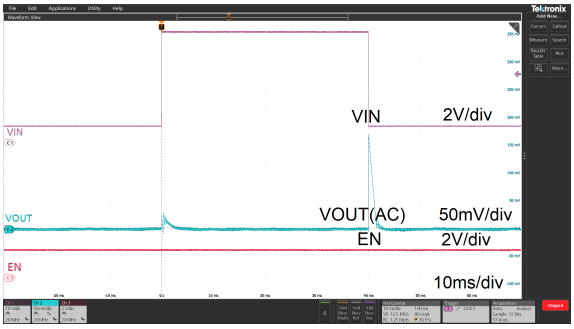

C_{OUT} = 1 µF, V_{IN} = 6 V to 40 V in 30 µs

Figure 17. Line Transient

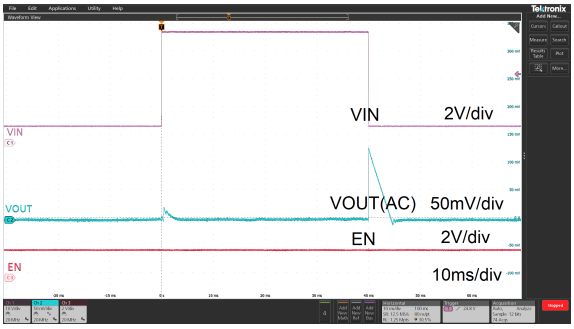

C_{OUT} = 10 µF, V_{IN} = 6 V to 40 V in 30 µs

Figure 18. Line Transient

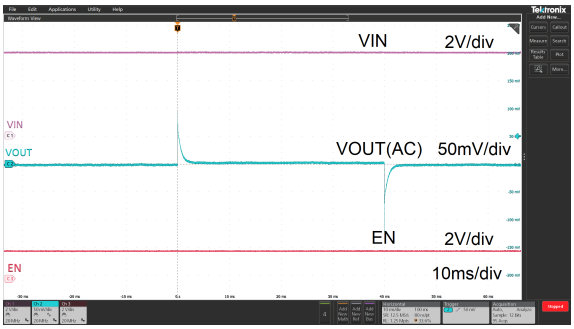

C_{OUT} = 1 µF, I_{OUT} = 10 mA to 100 mA in 5 µs

Figure 19. Load Transient

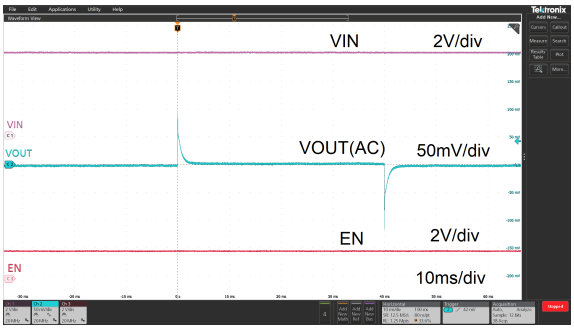

C_{OUT} = 10 µF, I_{OUT} = 10 mA to 100 mA in 5 µs

Figure 20. Load Transient

Detailed Description

Overview

The TPL8031Q series supports the operating range from 3 V to 42 V (45-V maximum transient voltage). Operating with as low as 3 V allows the TPL8031Q to continue to work well during cold-crank and start-stop conditions.

The TPL8031Q products are 3-μA ultra-low quiescent low dropout voltage linear regulators with 300-mA maximum output current capability.

With the above features, the TPL8031Q products are the optimal solutions for powering the MCU, CAN/LIN transceivers in the always-on applications, and the battery-connected applications in the automotive systems.

The TPL8031Q series provides fixed 5-V and 3.3-V output voltage options. The TPL8031Q supports a wide range of output capacitors from 1 μF to 200 μF with an ESR range from 0.001 Ω to 10 Ω. Also, the TPL8031Q series integrates over-current protection and over-temperature protection.

Functional Block Diagram

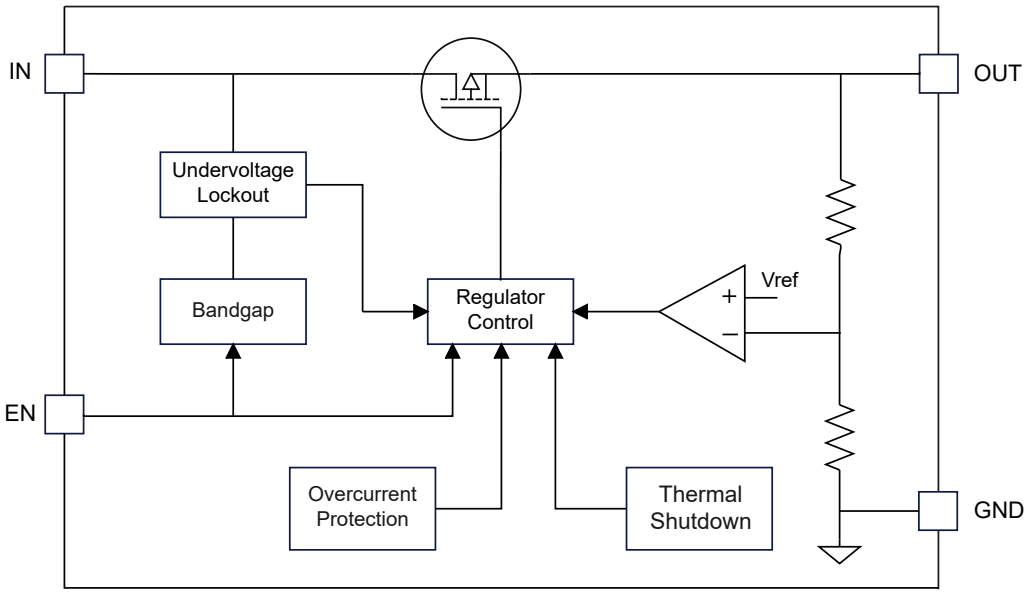

Figure 21. Functional Block Diagram

Feature Description

Enable (EN)

The enable pin (EN) is active high. Connect this pin to the GPIO of an external processor or digital logic control circuit to enable and disable the device. Or connect this pin to the IN pin for self-bias applications.

Under-Voltage Lockout (UVLO)

The TPL8031Q series uses an under-voltage lockout circuit to keep the output shut off until the internal circuitry operates properly. Refer to the Electrical Characteristics table for UVLO threshold and hysteresis.

Regulated Output Voltage (OUT)

The TPL8031Q series is available in fixed voltage versions of 5 V and 3.3 V. When the input voltage is higher than $V_{OUT(NOM)}$ + V_{DO}, the output pin is the regulated output based on the selected voltage version. When the input voltage falls below $V_{OUT(NOM)}$ + V_{DO}, the output pin tracks the input voltage minus the dropout voltage based on the load current.

Over-Current Protection

The TPL8031Q series integrates an internal current limit that helps to protect the regulator during fault conditions, e.g., the output is shorted to ground, or the output is forced below $V_{OUT(NOM)}$. The output voltage is not regulated when the device is in current limit, and $V_{OUT} = I_{CL} \times R_{LOAD}$.

Over-Temperature Protection

The over-temperature protection starts to work when the junction temperature exceeds the thermal shutdown (TSD) threshold, which turns off the regulator immediately. Until the device cools down and the junction temperature falls below the thermal shutdown threshold minus thermal shutdown hysteresis, the regulator turns on again. The junction temperature range should be limited according to the Recommended Operating Conditions table, continuously operating above the junction temperature range will reduce the device lifetime.

Application and Implementation

> Note
>
> Information in the following application sections is not part of the 3PEAK's component specification and 3PEAK does not warrant its accuracy or completeness. 3PEAK's customers are responsible for determining suitability of components for their purposes. Customers should validate and test their design implementation to confirm system functionality.

Application Information

The TPL8031Q products are 42-V 3-μA ultra-low quiescent low dropout voltage linear regulators with 300-mA maximum output current capability. The following application schematic shows a typical usage of the TPL8031Q series.

Typical Application

Figure 22 shows the typical application schematic of the TPL8031Q series.

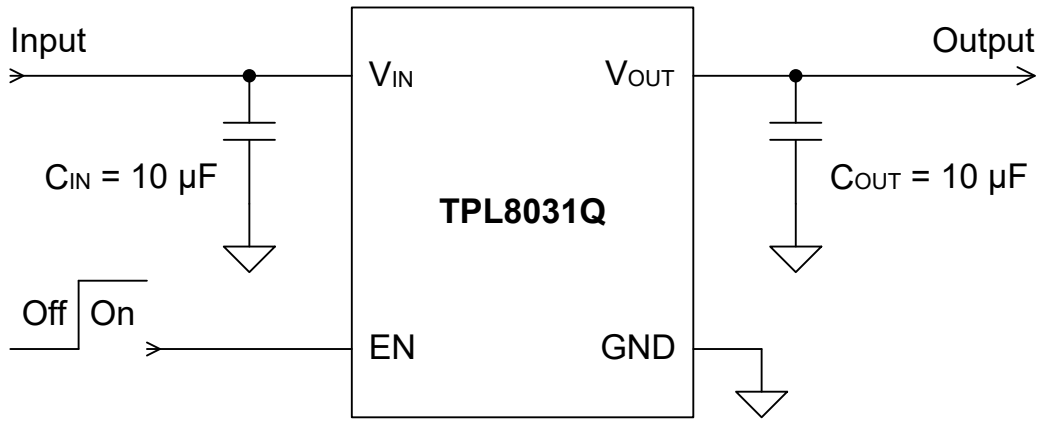

Figure 22. Typical Application Circuit

Input Capacitor and Output Capacitor

3PEAK recommends adding a 10-μF or greater capacitor with a 0.1-μF bypass capacitor in parallel at the IN pin to keep the input voltage stable. The voltage rating of the capacitors must be greater than the maximum input voltage.

To ensure loop stability, the TPL8031Q series requires an output capacitor of 1 μF to 200 μF with an ESR range from 0.001 Ω to 10 Ω. 3PEAK recommends selecting an X7R type 10-μF ceramic capacitor with low ESR over temperature.

Both input capacitors and output capacitors must be placed as close to the device pins as possible.

Power Dissipation and Thermal Consideration

During normal operation, LDO junction temperature should meet the requirements in the Recommended Operating Conditions table. Using equations below to calculate the power dissipation and estimate the junction temperature.

The power dissipation can be calculated using the Equation 1.

$$P_D = (V_{IN} - V_{OUT}) \times I_{OUT} + V_{IN} \times I_{GND} \quad (1)$$

The junction temperature can be estimated using the Equation 2. θ_{JA} is the junction-to-ambient thermal resistance.

$$T_J = T_A + P_D \times \theta_{JA} \quad (2)$$

Layout

Layout Guideline

- Both input capacitors and output capacitors must be placed to the device pins as close as possible, and the vias between capacitors and device power pins must be avoided.
- It is recommended to bypass the input pin to ground with a 0.1-μF bypass capacitor. The loop area formed by the bypass capacitor connection, the IN pin, and the GND pin of the system must be as small as possible.
- It is recommended to use wide and thick copper to minimize I×R drop and heat dissipation.

Tape and Reel Information

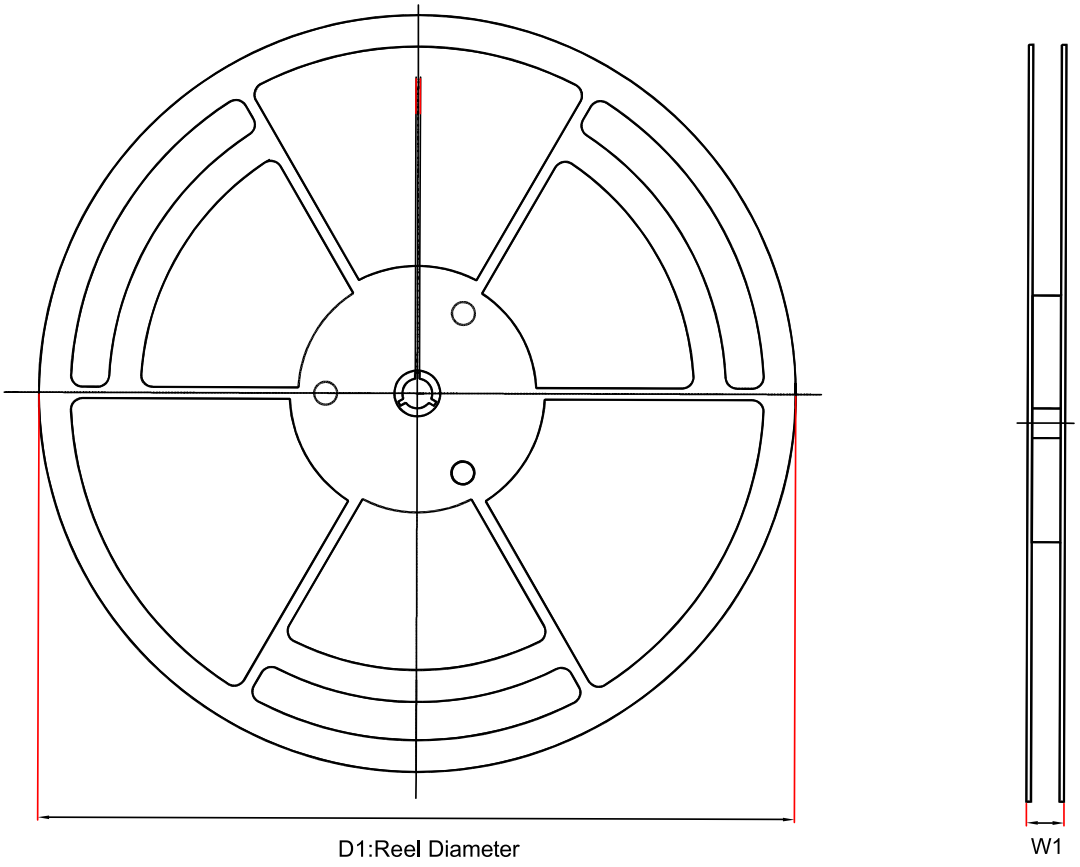

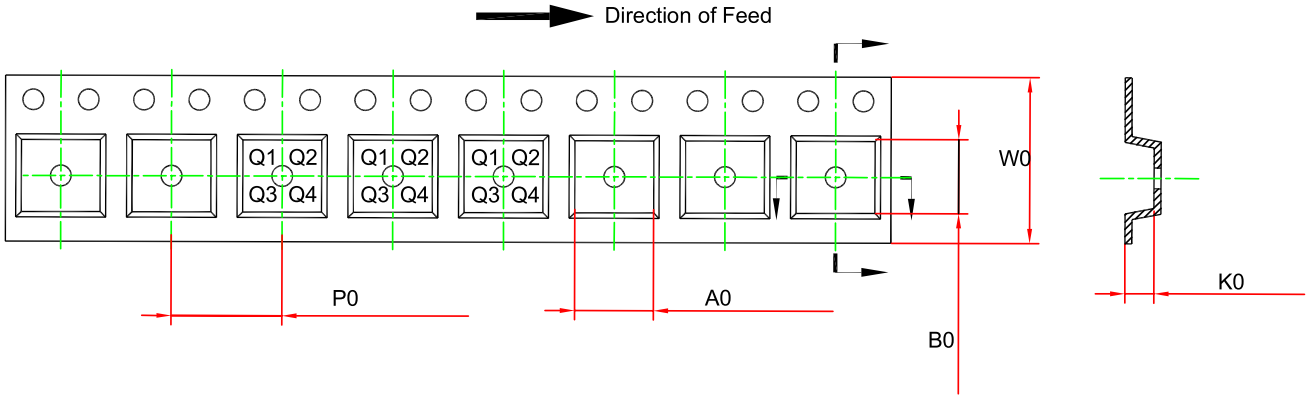

Order Number	Package	D1 (mm)	W1 (mm)	A0 (mm)	B0 (mm)	K0 (mm)	P0 (mm)	W0 (mm)	Pin1 Quadrant
TPL803133Q-DF6R-S	DFN3X3-8	330	17.6	3.3	3.3	1.1	8	12	Q1

Order Number	Package	D1 (mm)	W1 (mm)	A0 (mm)	B0 (mm)	K0 (mm)	P0 (mm)	W0 (mm)	Pin1 Quadrant
TPL803150Q-DF6R-S	DFN3X3-8	330	17.6	3.3	3.3	1.1	8	12	Q1
TPL803133Q-EV1R-S	EMSOP8	330	17.6	5.3	3.4	1.4	8	12	Q1
TPL803150Q-EV1R-S	EMSOP8	330	17.6	5.3	3.4	1.4	8	12	Q1
TPL803133Q-ST4R-S	SOT223-3	330	17.6	7.05	7.3	1.9	8	12	Q3
TPL803150Q-ST4R-S	SOT223-3	330	17.6	7.05	7.3	1.9	8	12	Q3

Package Outline Dimensions

DFN3X3-8

Package Outline Dimensions DFC(DFN3X3-8-F)

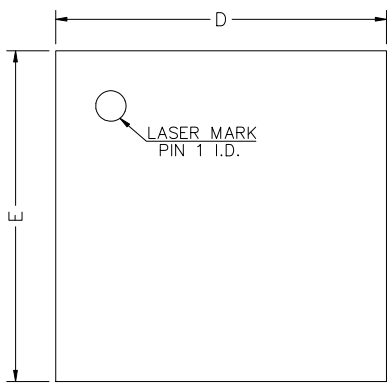

TOP VIEW

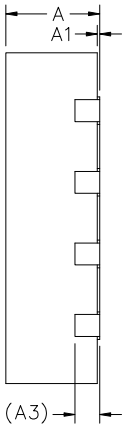

SIDE VIEW

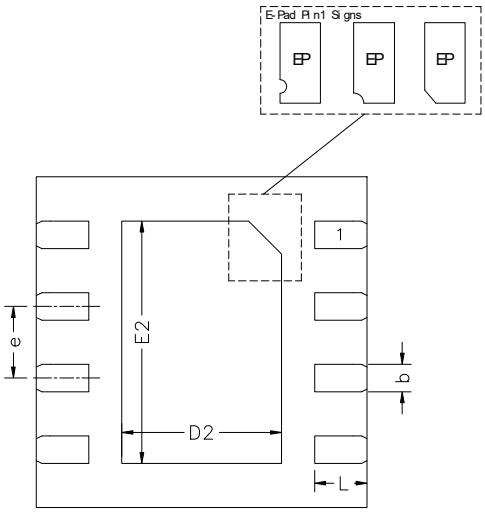

BOTTOM VIEW



SIDE VIEW

Symbol	Dimensions In Millimeters		Dimensions In Inches	
	MIN	MAX	MIN	MAX
A	0.800	0.900	0.031	0.035
A1	0.000	0.050	0.000	0.002
b	0.200	0.300	0.008	0.012
A3	0.150	0.250	0.006	0.010
D	2.900	3.100	0.114	0.122
D2	1.350	1.600	0.053	0.063
E	2.900	3.100	0.114	0.122
E2	2.100	2.350	0.083	0.093
e	0.650 BSC		0.026 BSC	
L	0.425	0.525	0.017	0.021

NOTES

1. Do not include mold flash or protrusion.
2. This drawing is subject to change without notice.
3. The many types of E-pad Pin1 signs may appear in the product.
4. Dimensioning and tolerancing per ASME Y14.5M.

EMSOP8

Package Outline Dimensions EV1(EMSOP-8-B)

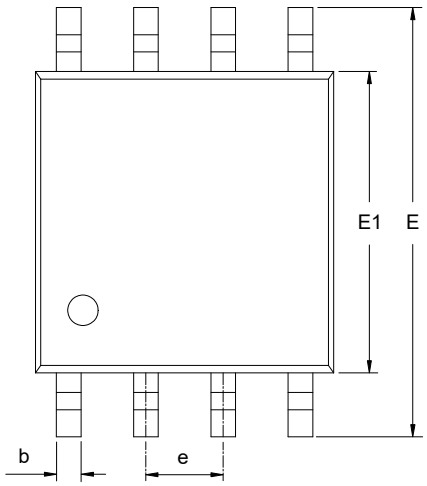

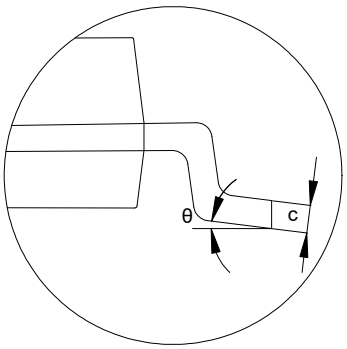

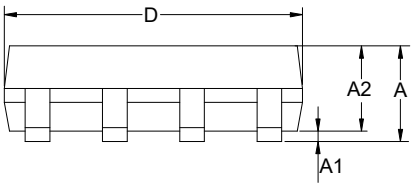

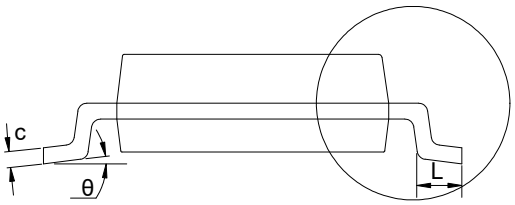

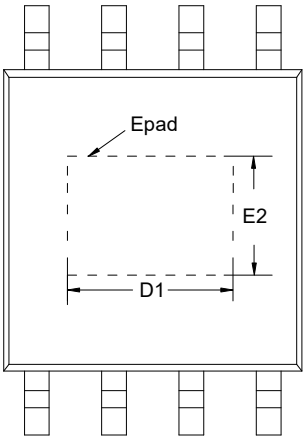

Symbol	Dimensions In Millimeters		Dimensions In Inches	
	MIN	MAX	MIN	MAX
A	0.800	1.100	0.031	0.043
A1	0.020	0.150	0.001	0.006
A2	0.750	0.950	0.030	0.037
b	0.250	0.380	0.010	0.015
c	0.090	0.230	0.004	0.009
D	2.900	3.100	0.114	0.122
D1	1.920	2.220	0.076	0.087
E	4.700	5.100	0.185	0.201
E1	2.900	3.100	0.114	0.122
E2	1.450	1.750	0.057	0.069
e	0.650 BSC		0.026 BSC	
L	0.400	0.800	0.016	0.031
θ	0	8°	0	8°

NOTES

1. Do not include mold flash or protrusion.
2. This drawing is subject to change without notice.
3. Dimensioning and toleracing per ASME Y14.5M.

SOT223-3

Package Outline Dimensions ST4(SOT223-3-A)

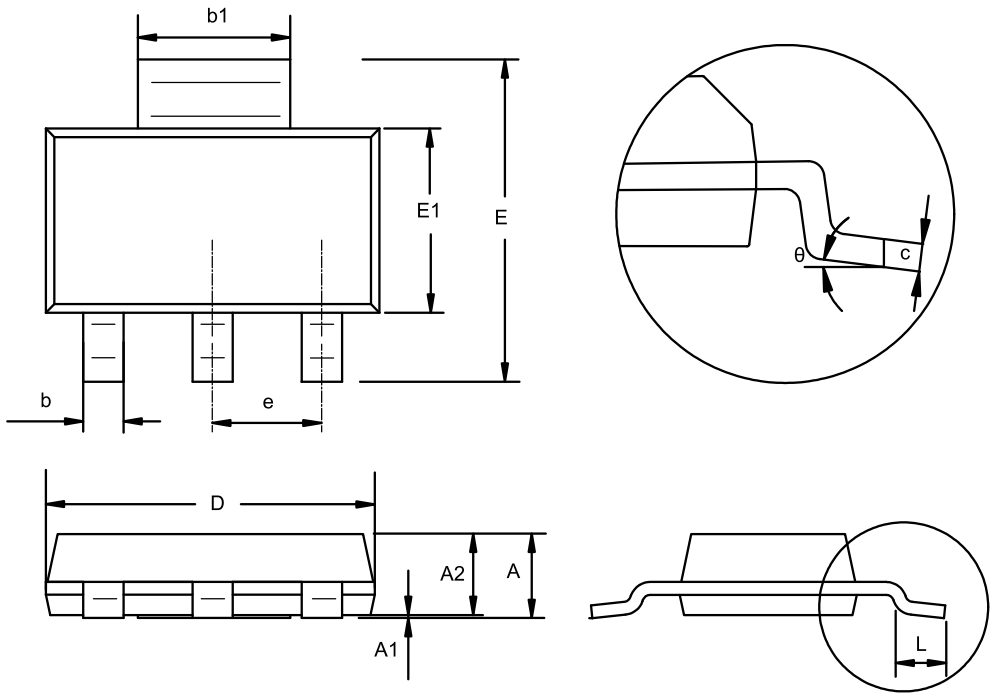

Symbol	Dimensions In Millimeters		Dimensions In Inches	
	MIN	MAX	MIN	MAX
A	1.500	1.800	0.059	0.071
A1	0.020	0.100	0.001	0.004
A2	1.500	1.700	0.059	0.067
b	0.660	0.840	0.026	0.033
b1	2.900	3.100	0.114	0.122
c	0.230	0.350	0.009	0.014
D	6.300	6.700	0.248	0.264
E	6.700	7.300	0.264	0.287
E1	3.300	3.700	0.130	0.146
e	2.300 BSC		0.091 BSC	
L	0.750	1.150	0.030	0.045
θ	0	10°	0	10°

NOTES

1. Do not include mold flash or protrusion.
2. This drawing is subject to change without notice.

Order Information

Order Number	Operating Temperature Range	Package	Marking Information	MSL	Transport Media, Quantity	Eco Plan
TPL803133Q-DF6R-S	−40 to 150°C	DFN3X3-8	L3133	MSL3	4,000	Green
TPL803150Q-DF6R-S	−40 to 150°C	DFN3X3-8	L3150	MSL3	4,000	Green
TPL803133Q-EV1R-S	−40 to 150°C	EMSOP8	L3133	MSL2	3,000	Green
TPL803150Q-EV1R-S	−40 to 150°C	EMSOP8	L3150	MSL2	3,000	Green
TPL803133Q-ST4R-S	−40 to 150°C	SOT223-3	LDC	MSL3	4,000	Green
TPL803150Q-ST4R-S	−40 to 150°C	SOT223-3	LDD	MSL3	4,000	Green

Green: 3PEAK defines "Green" to mean RoHS compatible and free of halogen substances.

IMPORTANT NOTICE AND DISCLAIMER

Copyright© 3PEAK 2012-2025. All rights reserved.

Trademarks. Any of the 思瑞浦 or 3PEAK trade names, trademarks, graphic marks, and domain names contained in this document /material are the property of 3PEAK. You may NOT reproduce, modify, publish, transmit or distribute any Trademark without the prior written consent of 3PEAK.

Performance Information. Performance tests or performance range contained in this document/material are either results of design simulation or actual tests conducted under designated testing environment. Any variation in testing environment or simulation environment, including but not limited to testing method, testing process or testing temperature, may affect actual performance of the product.

Disclaimer. 3PEAK provides technical and reliability data (including data sheets), design resources (including reference designs), application or other design recommendations, networking tools, security information and other resources "As Is". 3PEAK makes no warranty as to the absence of defects, and makes no warranties of any kind, express or implied, including without limitation, implied warranties as to merchantability, fitness for a particular purpose or non-infringement of any third-party's intellectual property rights. Unless otherwise specified in writing, products supplied by 3PEAK are not designed to be used in any life-threatening scenarios, including critical medical applications, automotive safety-critical systems, aviation, aerospace, or any situations where failure could result in bodily harm, loss of life, or significant property damage. 3PEAK disclaims all liability for any such unauthorized use.

This page intentionally left blank

ENTEGRECİ

Bu belge www.entegreci.com üzerinden sunulmaktadır.

Elektronik komponent tedarikinde Entegreci

Entegreci, Eskişehir merkezli, Türkiye geneline satış yapan bir elektronik komponent mağazasıdır. Entegreler (IC), mikrodenetleyiciler, transistörler, diyotlar, pasif elemanlar, konnektörler, modüller ve geliştirme kartları tek adetten seri üretim adetlerine kadar satılır. Ürün sayfalarında güncel stok durumunu, fiyatı ve datasheet bağlantısını bulabilirsiniz.

Parça koduyla arama

Üretici parça numarasını yazın; stok ve fiyatı hemen görün.

www.entegreci.com

Ürün kategorileri

Entegreden kapasitöre tüm elektronik komponent kategorileri.

Kategorilere göz atın

Üreticiler

Aradığınız üreticinin ürünlerini tek sayfada inceleyin.

Üreticileri görün

Toplu alım ve teklif

Listede olmayan ya da yüksek adetli parçalar için teklif isteyin.

Teklif isteyin

www.entegreci.com | **destek@entegreci.com** | **0850 305 90 34**

Entegreci is an online electronic components store based in Türkiye. Search by manufacturer part number to see stock, prices and datasheets for integrated circuits, microcontrollers, transistors, passive components and connectors, or request a quote for parts that are not listed.

Bu sayfa Entegreci tarafından eklenmiştir. Belgenin önceki sayfaları asıl yayıncısına aittir ve içeriği değiştirilmemiştir; en güncel sürüm için belgenin yayıncısına başvurun.