1.5-A Wide-Input High-Current Low-Dropout Linear Regulator

Features

- Qualified for Automotive Applications
  - AEC-Q100 Grade 1, T_A: −40°C to +125°C
  - Junction Temperature, T_J: −40°C to +150°C
- Input Voltage Range: 2.75 V to 29 V
- Adjustable Output Voltage from 1.25 V
- 1.5 A Maximum Output Current
- ±2% Output Accuracy Over Line Regulation, Load Regulation, and Operating Temperature Range
- Low Dropout Voltage: 1.2 V Typically at 1.5 A
- High PSRR:
  - 77 dB at 120 Hz
  - 72 dB at 1 kHz
- Excellent Transient Response
- Stable with a 10 µF to 100 µF Tantalum Output Capacitor
- Integrated Protection:
  - Over-Current Protection
  - Over-Temperature Protection
- Package Options:
  - ESOP8

Applications

- Automotive High Power Linear Power Supplies
- Automotive Low Noise Power Supplies
- Automotive Microcontroller, ASIC Power Supply

Description

The TPL8151Q is a 1.5-A high-current, low-dropout linear regulator with up to 29-V wide input voltage range. The TPL8151Q supports adjustable output voltage ranging from 1.25 V with an external resistor divider and is stable with a 10-µF to 100-µF tantalum output capacitor.

The TPL8151Q is compatible with older three-terminal adjustable linear regulators but has lower dropout voltage, tighter output tolerance, and better transient performance.

The TPL8151Q provides a thermal-enhanced ESOP8 package with guaranteed ambient operating temperature (T_A) range from −40°C to +125°C.

Typical Application Circuit

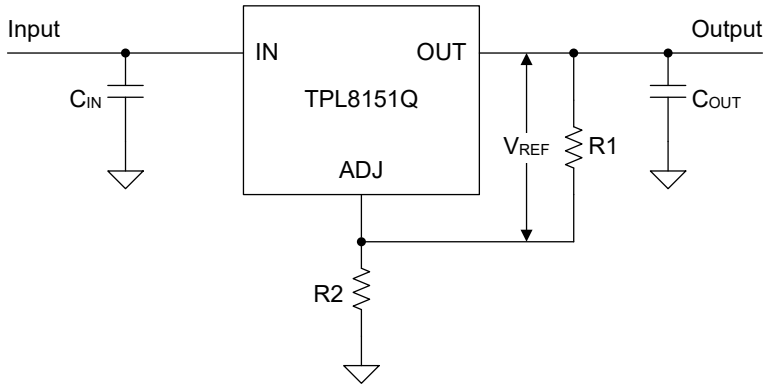

Table of Contents

Features 1
Applications 1
Description 1
Typical Application Circuit 1
Product Family Table 3
Revision History 3
Pin Configuration and Functions 4
Specifications 5
Absolute Maximum Ratings (1) 5
ESD, Electrostatic Discharge Protection 5
Recommended Operating Conditions 5
Thermal Information 5
Electrical Characteristics 6
Typical Performance Characteristics 8
Detailed Description 10
Overview 10
Functional Block Diagram 10
Feature Description 10
Application and Implementation 12
Application Information 12
Typical Application 12
Layout 13
Layout Guideline 13
Tape and Reel Information 14
Package Outline Dimensions 15
ESOP8-B 15
Order Information 16
IMPORTANT NOTICE AND DISCLAIMER 17

Product Family Table

Order Number	Output Voltage	Output Current	Package
TPL8151ADQ-ES1R-S	Adjustable	1.5 A	ESOP8

Revision History

Date	Revision	Notes
2021-07-31	Rev.Pre.0	Preliminary
2022-04-15	Rev.Pre.1	1. Updated Thermal Information 2. Added Typical Performance Characteristics 3. Added Tape and Reel Information
2022-08-15	Rev.A.0	Initial released
2024-04-06	Rev.A.1	Updated Thermal Information
2024-10-04	Rev.A.2	Corrected the equation about V_{OUT} and V_{REF}
2025-05-11	Rev.A.3	Corrected ESD conditon from "JS-001, JS-002" to "AEC Q100-002, AEC Q100-011"

Pin Configuration and Functions

TPL8151Q-S
ESOP8 Package
Top View

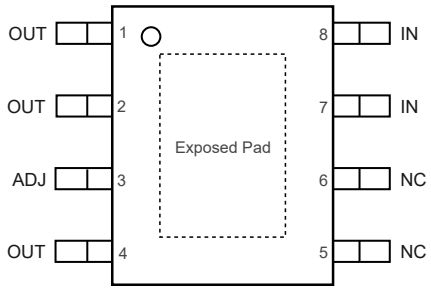

Table 1. Pin Functions: TPL8151Q-S

Pin No.	Pin Name	I/O	Description
3	ADJ	I	Output voltage adjust pin. Connect to a resistor divider to adjust the output voltage.
7, 8	IN	I	Input voltage pin.
5, 6	NC	–	No connection.
1, 2, 4 (1)	OUT	O	Regulated output voltage pin.
–	Exposed Pad	–	The exposed Pad MUST be connected to OUT directly to improve thermal performance.

(1) Pin 4 MUST be directly tied to the other OUT pins.

Specifications

Absolute Maximum Ratings (1)

Parameter		Min	Max	Unit
V_{IN} (1)(2)		–0.3	32	V
V_{OUT} (1)(2)		–0.3	32	V
T_J (1)	Maximum Junction Temperature Range	–40	150	°C
T_{STG} (1)	Storage Temperature Range	–65	150	°C
T_L (1)	Lead Temperature (Soldering 10 sec)		260	°C

(1) Stresses beyond those listed under Absolute Maximum Ratings may cause permanent damage to the device. Exposure to any Absolute Maximum Rating condition for extended periods may affect device reliability and lifetime.
(2) All voltage values are with respect to ground.

ESD, Electrostatic Discharge Protection

Parameter		Condition	Minimum Level	Unit
HBM	Human Body Model ESD	AEC Q100-002	±3.5	kV
CDM	Charged Device Model ESD	AEC Q100-011	±1.5	kV

Recommended Operating Conditions

Parameter		Min	Max	Unit
V_{IN}		2.75	29	V
V_{OUT}		0	25	V
C_{OUT}		10	100	μF
ESR		0.5	6	Ω
T_A	Ambient Temperature Range	–40	125	°C
T_J	Junction Temperature Range	–40	125	°C

Thermal Information

Package Type	θ_{JA}	θ_{JB}	$\theta_{JC,TOP}$	Unit
ESOP8	36.1	14.63	47.53	°C/W

Electrical Characteristics

All test conditions: V_{IN} = $V_{OUT(NOM)}$ + 1.5 V or 4.25 V, whichever is greater; C_{IN} = C_{OUT} = 10 µF, −40°C ≤ T_J ≤ +125°C, unless otherwise noted.

Parameter		Conditions	Min	Typ	Max	Unit
Supply Voltage and Current						
V_{IN} (1)	Input Supply Voltage		$V_{IN, MIN}$		29	V
Regulated Voltage and Current						
V_{OUT} (2)	Output Voltage Accuracy	I_{OUT} = 10 mA, T_A = 25°C		1%		
		I_{OUT} = 10 mA to 1.5 A, V_{IN} = 2.75 V to 29 V	-2%		2%	
V_{REF} (3)	Reference Voltage	I_{OUT} = 10 mA, T_A = 25°C	1.238	1.25	1.263	V
		I_{OUT} = 10 mA to 1.5 A, V_{IN} = 2.75 V to 29 V	1.225	1.25	1.275	V
ΔV_{OUT}	Line Regulation	I_{OUT} = 10 mA, V_{IN} = 2.75 V to 16.5 V, T_A = 25 °C		0.04%		
		I_{OUT} = 10 mA, V_{IN} = 2.75 V to 16.5 V		0.04%	0.2%	
	Load Regulation	I_{OUT} = 10 mA to 1.5 A, T_A = 25°C		0.2%		
		I_{OUT} = 10 mA to 1.5 A		0.2%	0.4%	
V_{DO} (4)	Dropout Voltage	I_{OUT} = 1.5 A		1.3	1.5	V
I_{OUT}	Minimum Load	V_{IN} = 29 V		5	10	mA
	Output Current	V_{OUT} in regulation	0		1.5	A
I_{ADJ}	ADJ Pin Current	V_{IN} = 4.25 V, I_{OUT} = 10 mA		75	120	µA
I_{SC}	Short-circuit Current Limit	V_{IN} – V_{OUT} = 5 V	1.6	2.3		A
		V_{IN} – V_{OUT} = 25 V	50	200		mA
PSRR (5)	Power Supply Rejection Ratio	I_{OUT} = 0.1 A, f = 120 Hz, C_{OUT} = 22 µF, C_{ADJ} = 22 µF, VOUT = 1.8 V, V_{IN} = V_{OUT} + 2 V		77		dB
		I_{OUT} = 0.1 A, f = 1 kHz, C_{OUT} = 22 µF, C_{ADJ} = 22 µF, V_{OUT} = 1.8 V, V_{IN} = V_{OUT} + 2 V		72		dB
		I_{OUT} = 0.1 A, f = 100 kHz, C_{OUT} = 22 µF, C_{ADJ} = 22 µF, V_{OUT} = 1.8 V, V_{IN} = V_{OUT} + 2 V		35		dB
V_N (5)	Output Noise Voltage	I_{OUT} = 10 mA, BW = 10 Hz to 100 kHz		17.5		μV_{RMS}
Temperature Range						
T_{SD} (5)	Thermal Shutdown Threshold			180		°C
	Thermal Shutdown Hysteresis			15		°C

(1) $V_{IN,MIN}$ = $V_{OUT(NOM)}$ + 1.5 V or 2.75 V, whichever is greater.
(2) Tolerance of external resistor divider is not included.
(3) V_{REF} is the voltage value between OUT and ADJ.

(4) Dropout voltage is the minimum input to output voltage differential needed to maintain regulation at a specified output current and measure for V_{OUT} ≥ 2.75 V. In dropout mode, the output voltage will be equal to $V_{IN} – V_{DO}$.
(5) Not tested during production, guaranteed by design.

Typical Performance Characteristics

All test conditions: V_{IN} = $V_{OUT(NOM)}$ + 1.5 V or 4.25 V, whichever is greater; C_{IN} = C_{OUT} = 10 µF, –40°C ≤ T_A ≤ +125°C, unless otherwise noted.

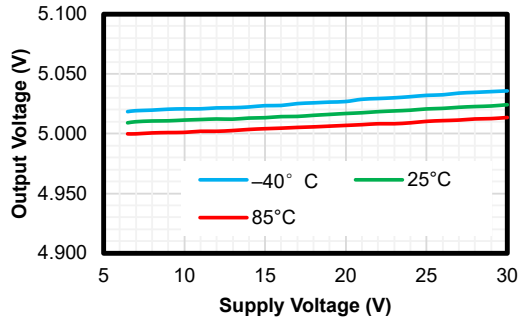

V_{OUT} = 5 V, I_{OUT} = 1 mA

Figure 1. Line Regulation

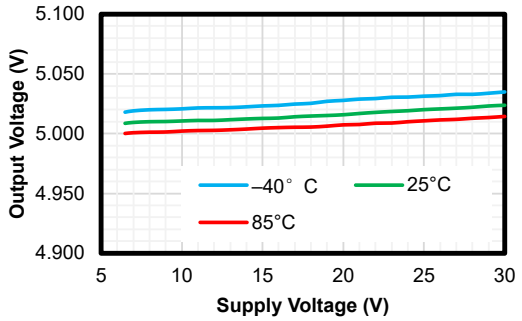

V_{OUT} = 5 V, I_{OUT} = 100 mA

Figure 2. Line Regulation

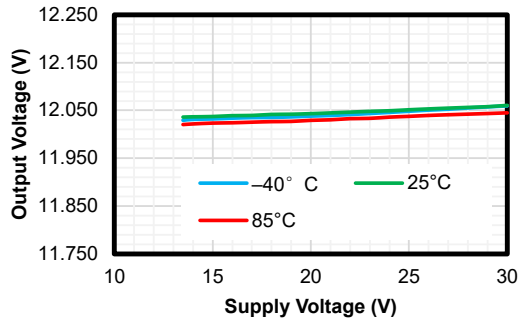

V_{OUT} = 12 V, I_{OUT} = 1 mA

Figure 3. Line Regulation

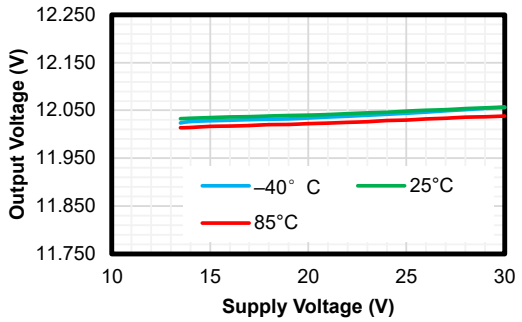

V_{OUT} = 12 V, I_{OUT} = 100 mA

Figure 4. Line Regulation

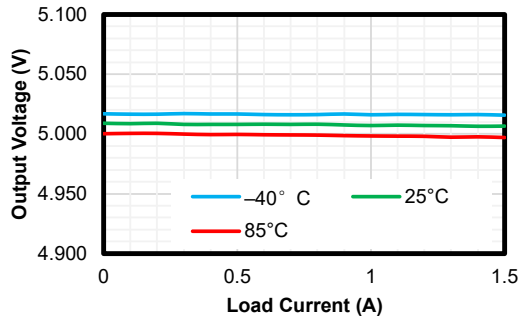

V_{OUT} = 5 V, V_{IN} = V_{OUT} + 1 V

Figure 5. Load Regulation

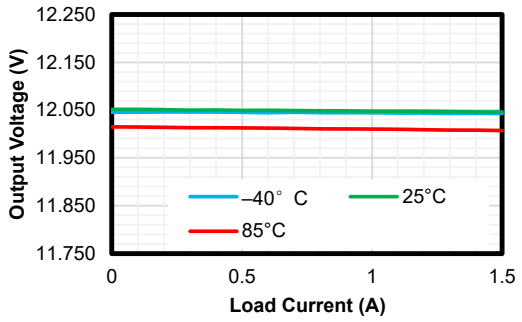

V_{OUT} = 12 V, V_{IN} = V_{OUT} + 1 V

Figure 6. Load Regulation

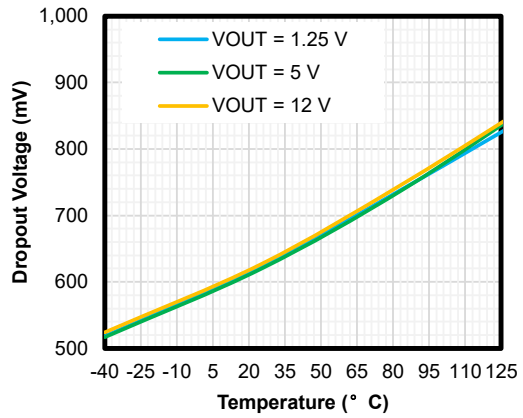

Figure 7. Dropout Voltage vs Temperature

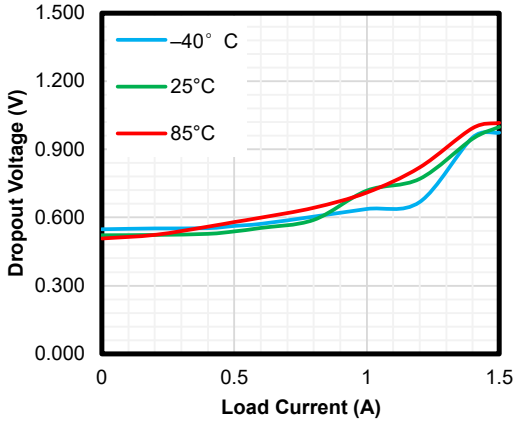

Figure 8. Dropout Voltage vs Load Current

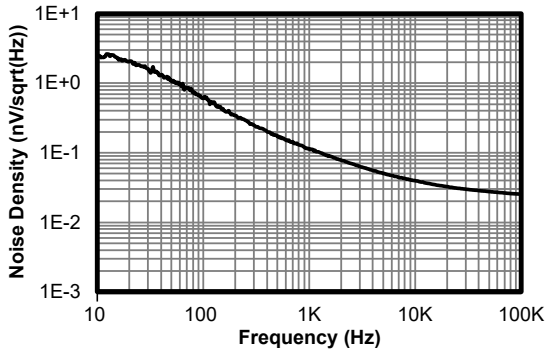

V_{OUT} = 1.25 V, I_{OUT} = 10 mA

Figure 9. Noise

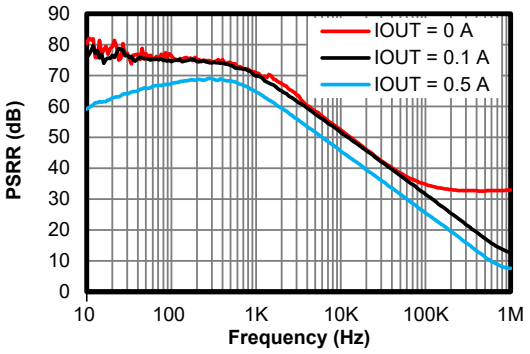

V_{OUT} = 1.25 V, V_{IN} = V_{OUT} + 2 V

Figure 10. PSRR

Detailed Description

Overview

The TPL8151Q is a 1.5-A high-current, low-dropout linear regulator with up to 29-V wide input voltage range. The TPL8151Q supports adjustable output voltage ranging from 1.25 V with an external resistor divider and is stable with a 10-μF to 100-μF tantalum output capacitor.

The TPL8151Q is compatible with older three-terminal adjustable linear regulators but has lower dropout voltage, tight output tolerance, and better transient performance.

Functional Block Diagram

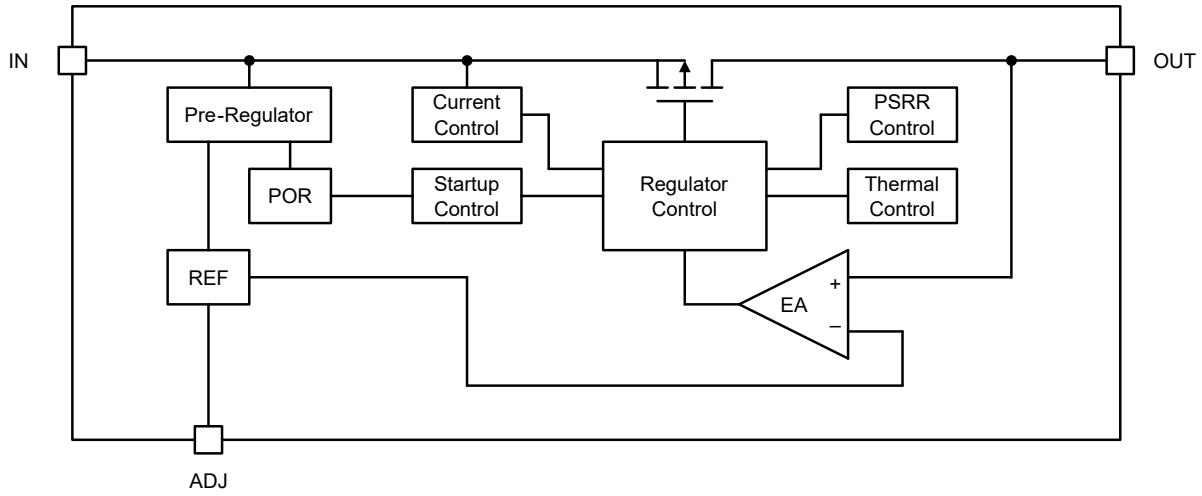

Figure 11. Functional Block Diagram

Feature Description

Adjustable Output Voltage (ADJ and OUT)

The TPL8151Q supports adjustable output voltage ranging from 1.25 V with an external resistor divider. As shown in Figure 12, the voltage (V_{REF}) across R1 generates a constant current, which flows through R2. The voltage across R1 and R2 sets the output voltage. Use Equation 1 to calculate the output voltage.

$$V_{OUT} = V_{REF} \times \left(1 + \frac{R2}{R1}\right) \quad (1)$$

Where the feedback voltage V_{REF} is 1.25 V.

The current I_{ADJ} sourcing from the ADJ pin introduces an output error. Suggest selecting the R1 around 100 Ω to minimize the output error. The resistor R1 should be put close to both the OUT pin and the ADJ pin.

Over-Current Protection

The TPL8151Q integrates an internal current limit that helps protect the regulator during fault conditions. When the output is pulled down below the regulated voltage, the over-current protection starts to work and limits the output current.

Under the over-current condition, the internal junction temperature ramps up quickly. When the junction temperature is high enough, it will cause over-temperature protection.

Over-Temperature Protection

The over-temperature protection starts to work when the junction temperature exceeds the thermal shutdown threshold (T_{SD}), which turns off the regulator immediately. When the device cools down, the junction temperature falls below a value, which equals to the thermal shutdown threshold minus thermal shutdown hysteresis, and the regulator turns on again.

The junction temperature range should be limited according to the Recommended Operating Conditions table. Continuously operating above the junction temperature range will shorten the lifetime of the device.

Application and Implementation

> Note
>
> Information in the following application sections is not part of the 3PEAK's component specification and 3PEAK does not warrant its accuracy or completeness. 3PEAK's customers are responsible for determining suitability of components for their purposes. Customers should validate and test their design implementation to confirm system functionality.

Application Information

The TPL8151Q is a 1.5-A wide-input, high-PSRR, low-noise, low-dropout linear regulator. The following application shows a typical usage of the TPL8151Q.

Typical Application

Figure 12 shows the typical application schematic.

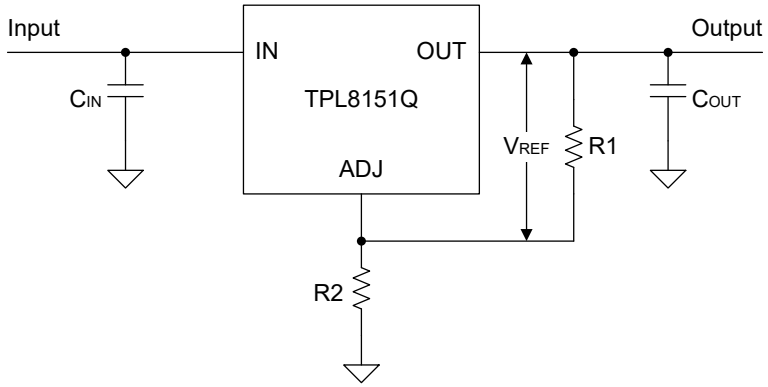

Figure 12. Typical Application Circuit

Input Capacitor and Output Capacitor

3PEAK recommends adding a 10-μF or greater capacitor at the IN pin to keep the input voltage stable. The voltage rating of the capacitors must be higher than the maximum input voltage.

To ensure the loop stability, the TPL8151 requires an output tantalum capacitor of 10 μF or greater. 3PEAK recommends selecting a 10-μF or greater capacitor with an ESR range from 0.5 Ω to 6 Ω at the OUT pin.

Both input capacitors and output capacitors must be placed as close to the device pins as possible.

Power Dissipation and Thermal Consideration

During the normal operation, the LDO junction temperature should meet the requirement in the Recommended Operating Conditions table. Use the equations below to calculate the power dissipation and estimate the junction temperature.

The power dissipation can be calculated using Equation 2.

$$P_D = (V_{IN} - V_{OUT}) \times I_{OUT} + V_{IN} \times I_{GND} \quad (2)$$

The junction temperature can be estimated using Equation 3. θ_{JA} is the junction-to-ambient thermal resistance.

$$T_J = T_A + P_D \times \theta_{JA} \quad (3)$$

Layout

Layout Guideline

- Both input and output capacitors must be placed as close to the device pins as possible, and vias between capacitors and device power pins must be avoided.
- It is recommended to bypass the input pin to ground with a 0.1-μF bypass capacitor. The loop area formed by the bypass capacitor connection, the IN pin, and the GND pin of the system must be as small as possible.
- It is recommended to use wide and thick copper to minimize I×R drop and heat dissipation.

Tape and Reel Information

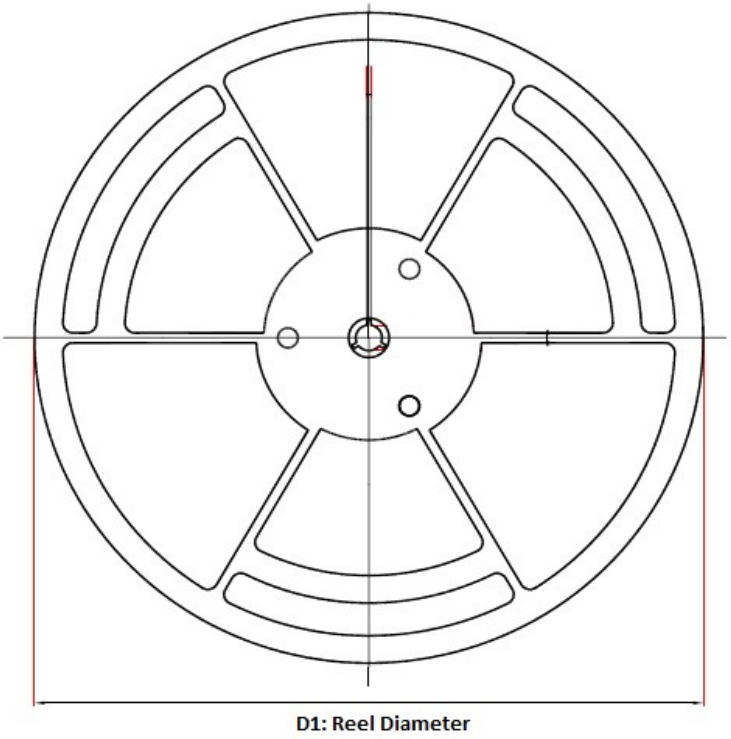

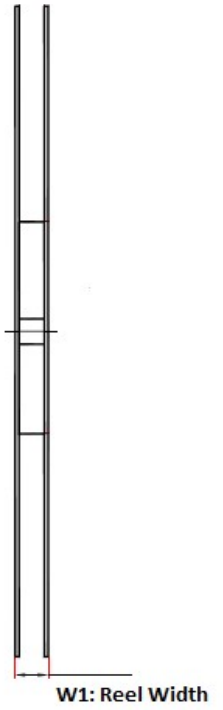

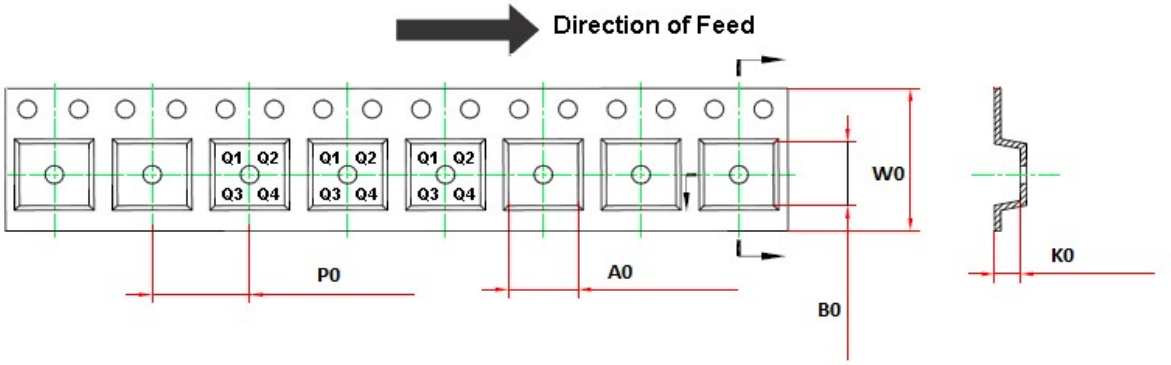

Order Number	Package	D1 (mm)	W1 (mm)	A0 (mm)	B0 (mm)	K0 (mm)	P0 (mm)	W0 (mm)	Pin1 Quadrant
TPL8151ADQ-ES1R-S	ESOP-8	330	17.6	6.4	5.4	2.1	8	12	Q1

Package Outline Dimensions

ESOP8-B

Package Outline Dimensions ES1(ESOP-8-B)

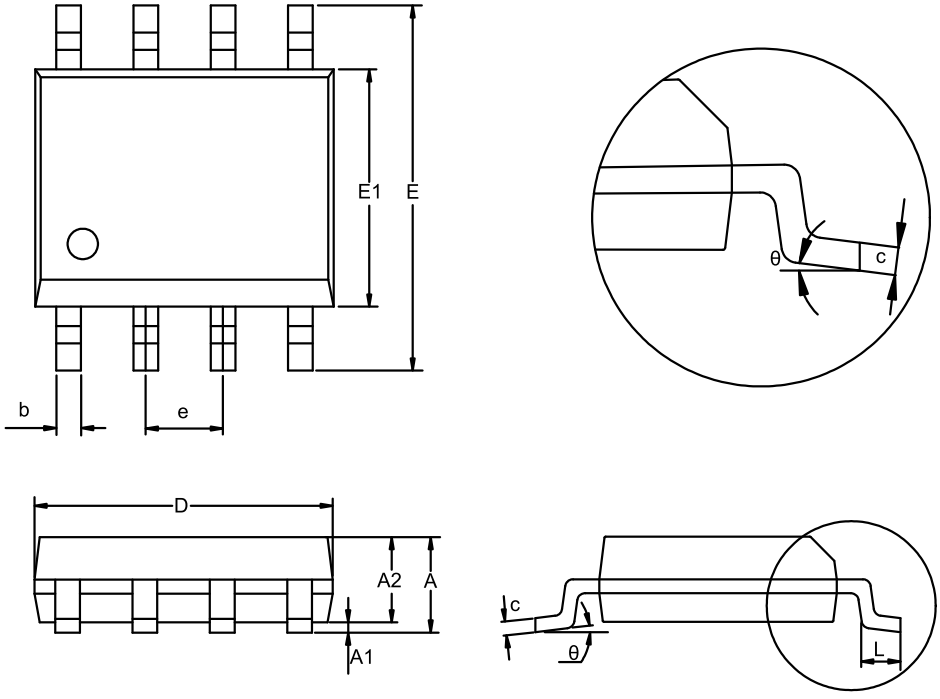

Symbol	Dimensions In Millimeters		Dimensions In Inches	
	MIN	MAX	MIN	MAX
A	1.350	1.750	0.053	0.069
A1	0.000	0.150	0.000	0.006
A2	1.250	1.600	0.049	0.062
b	0.330	0.510	0.013	0.020
c	0.170	0.250	0.007	0.010
D	4.700	5.100	0.185	0.201
D1	2.800	3.200	0.110	0.126
E	5.800	6.200	0.228	0.244
E1	3.800	4.000	0.150	0.157
E2	2.400	2.800	0.094	0.110
e	1.270 BSC		0.050 BSC	
L	0.400	1.000	0.016	0.039
θ	0	8°	0	8°

NOTES

1. Do not include mold flash or protrusion.
2. This drawing is subject to change without notice.

Order Information

Order Number	Operating Temperature Range	Package	Marking Information	MSL	Transport Media, Quantity	Eco Plan
TPL8151ADQ-ES1R-S	−40 to 125°C	ESOP8	L15A	MSL3	4,000	Green

Green: 3PEAK defines "Green" to mean RoHS compatible and free of halogen substances.

IMPORTANT NOTICE AND DISCLAIMER

Copyright© 3PEAK 2012-2025. All rights reserved.

Trademarks. Any of the 思瑞浦 or 3PEAK trade names, trademarks, graphic marks, and domain names contained in this document /material are the property of 3PEAK. You may NOT reproduce, modify, publish, transmit or distribute any Trademark without the prior written consent of 3PEAK.

Performance Information. Performance tests or performance range contained in this document/material are either results of design simulation or actual tests conducted under designated testing environment. Any variation in testing environment or simulation environment, including but not limited to testing method, testing process or testing temperature, may affect actual performance of the product.

Disclaimer. 3PEAK provides technical and reliability data (including data sheets), design resources (including reference designs), application or other design recommendations, networking tools, security information and other resources "As Is". 3PEAK makes no warranty as to the absence of defects, and makes no warranties of any kind, express or implied, including without limitation, implied warranties as to merchantability, fitness for a particular purpose or non-infringement of any third-party's intellectual property rights. Unless otherwise specified in writing, products supplied by 3PEAK are not designed to be used in any life-threatening scenarios, including critical medical applications, automotive safety-critical systems, aviation, aerospace, or any situations where failure could result in bodily harm, loss of life, or significant property damage. 3PEAK disclaims all liability for any such unauthorized use.

This page intentionally left blank

ENTEGRECİ

Bu belge www.entegreci.com üzerinden sunulmaktadır.

Elektronik komponent tedarikinde Entegreci

Entegreci, Eskişehir merkezli, Türkiye geneline satış yapan bir elektronik komponent mağazasıdır. Entegreler (IC), mikrodenetleyiciler, transistörler, diyotlar, pasif elemanlar, konnektörler, modüller ve geliştirme kartları tek adetten seri üretim adetlerine kadar satılır. Ürün sayfalarında güncel stok durumunu, fiyatı ve datasheet bağlantısını bulabilirsiniz.

Parça koduyla arama

Üretici parça numarasını yazın; stok ve fiyatı hemen görün.

www.entegreci.com

Ürün kategorileri

Entegreden kapasitöre tüm elektronik komponent kategorileri.

Kategorilere göz atın

Üreticiler

Aradığınız üreticinin ürünlerini tek sayfada inceleyin.

Üreticileri görün

Toplu alım ve teklif

Listede olmayan ya da yüksek adetli parçalar için teklif isteyin.

Teklif isteyin

www.entegreci.com | **destek@entegreci.com** | **0850 305 90 34**

Entegreci is an online electronic components store based in Türkiye. Search by manufacturer part number to see stock, prices and datasheets for integrated circuits, microcontrollers, transistors, passive components and connectors, or request a quote for parts that are not listed.

Bu sayfa Entegreci tarafından eklenmiştir. Belgenin önceki sayfaları asıl yayıncısına aittir ve içeriği değiştirilmemiştir; en güncel sürüm için belgenin yayıncısına başvurun.