42-V Input, 180-mA Output High Voltage and Low Quiescent Current LDO

Features

- Wide Input Voltage Range: 3.6 V to 42 V
- Fixed Output: 3 V, 3.3 V, and 5 V
- ±1% Output Accuracy Under Room Temperature
- Ultra-Low Quiescent Current: 2 μA
- Maximum Output Current: 180 mA
- Low Dropout Voltage: 200 mV at 50 mA
- High PSRR: 73 dB at 100 Hz
- Current Limit and Thermal Protection
- Stable with 2.2-μF to 22-μF Low ESR Ceramic Capacitor
- Soft Start Limits Input Current Surge During Enable
- Thermal Shutdown Protection
- Junction Temperature Range: −40°C to +125°C
- Packages: SOT89-3, SOT23-5, SOT23-3, SOT223-3

Applications

- Handheld Devices with Battery Power Supply
- POS and Power Tools
- Meters and Smoke Detector
- Industrial Control
- Wireless and IoT Modules

Description

The TPL820 is a series of high-performance and low-dropout linear regulators. The TPL820 series supports a maximum 42-V input voltage and a 180-mA output current with low quiescent current and high PSRR. The TPL820 series is stable with a 2.2-μF to 22-μF output capacitor, and a 4.7-μF ceramic capacitor is recommended.

The TPL820 series has a high PSRR with 73 dB at 100 Hz. This feature makes the TPL820 series very suitable for power-sensitive applications with high noise from the previous stage power supply. A 2-μA ultra-low quiescent current makes the TPL820 series ideal for portable devices with a battery power supply. Current-limit and thermal overload protection circuits improve reliability under heavy load conditions.

The TPL820 series provides fixed output voltage options from 3.0 V to 5 V with ±2% voltage accuracy over operating conditions. The TPL820 series is guaranteed over the junction temperature range from −40°C to +125°C.

Typical Application Circuit

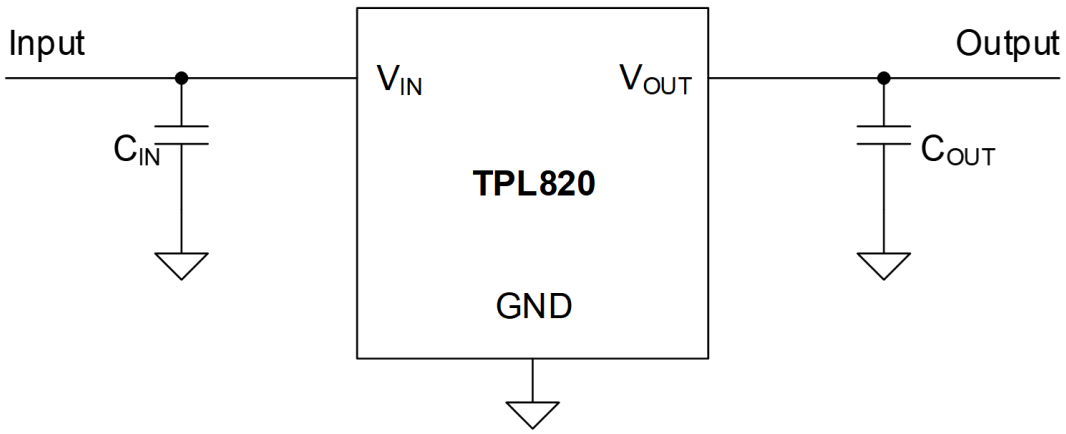

Table of Contents

Features 1
Applications 1
Description 1
Typical Application Circuit 1
Product Family Table 3
Revision History 4
Pin Configuration and Functions 5
Specifications 7
Absolute Maximum Ratings 7
ESD, Electrostatic Discharge Protection 7
Recommended Operating Conditions 7
Thermal Information 7
Electrical Characteristics 9
Typical Performance Characteristics 10
Detailed Description 12
Overview 12
Functional Block Diagram 12
Feature Description 12
Application and Implementation 14
Application Information 14
Typical Application 14
Layout 16
Layout Guideline 16
Tape and Reel Information 17
Package Outline Dimensions 19
SOT89-3 19
SOT23-5 20
SOT23-3 21
SOT223-3 22
Order Information 23
IMPORTANT NOTICE AND DISCLAIMER 24

Product Family Table

Order Number	Output Voltage (V)	Package
TPL820F30-89TR	Fixed 3.0 V	SOT89-3
TPL820F33-89TR	Fixed 3.3 V	SOT89-3
TPL820F50-89TR	Fixed 5.0 V	SOT89-3
TPL820F33-5TR	Fixed 3.3 V	SOT23-5
TPL820F50-5TR	Fixed 5.0 V	SOT23-5
TPL820U33-5TR	Fixed 3.3 V	SOT23-5 (B)
TPL820U50-5TR	Fixed 5.0 V	SOT23-5 (B)
TPL820F33-3TR	Fixed 3.3 V	SOT23-3
TPL820F50-3TR	Fixed 5.0 V	SOT23-3
TPL820F33-ST4R	Fixed 3.3 V	SOT223-3
TPL820F50-ST4R	Fixed 5.0 V	SOT223-3

Revision History

Date	Revision	Notes
2018-09-28	Rev.Pre.0	Preliminary version.
2018-11-27	Rev.A.0	Initial released version.
2019-08-31	Rev.A.1	Added the SOT223-3 package.
2020-04-30	Rev.A.2	Updated the thermal information of the SOT89-3 package.
2021-03-29	Rev.A.3	1. Changed the pin 1 orientation of the SOT23-3 package. 2. Added Tape and Reel Information.
2021-05-28	Rev.A.4	1. Corrected Tape and Reel Information.
2021-08-31	Rev.A.5	1. Changed the output current from 200 mA to 180 mA.
2022-03-21	Rev.A.6	1. Added the output capacitor upper limit. 2. Removed the ambient temperature range. 3. Removed the 1.2-V, 1.8-V, 2.5-V, and 4.5-V output version. 4. Removed the SOT89-3 (B) package.
2022-07-22	Rev.A.7	Corrected the typical application circuit in Figure 12.
2024-12-09	Rev.A.8	1. Updated to a new datasheet format. 2. Removed the 2.8-V output version. 3. Removed TPL820F30-5TR, TPL820U30-5TR, and TPL820F30-3TR. 4. Added P_D of the SOT223-3 package. 5. Corrected the PIN1 Quadrant of the SOT223-3 package. Corrected the D1 size in the Tape and Reel Information of the SOT223-3 package. 6. Updated the thermal information of SOT23-5 and SOT23-3 packages.

Pin Configuration and Functions

TPL820
SOT89-3 Package
Top View

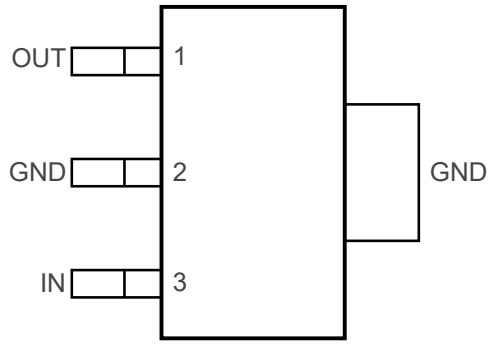

TPL820
SOT23-5 Package
Top View

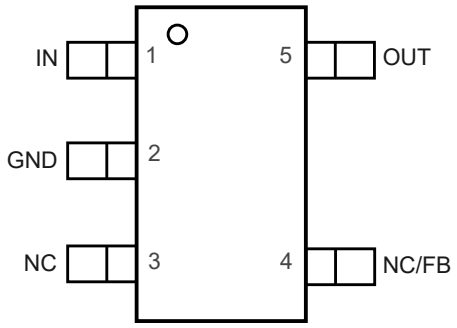

TPL820
SOT23-5 (B) Package
Top View

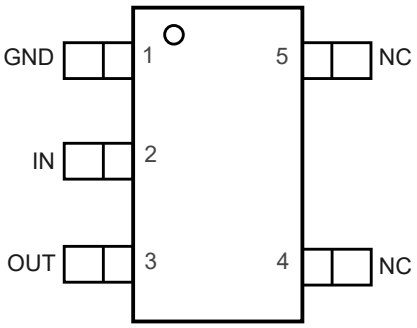

TPL820
SOT23-3 Package
Top View

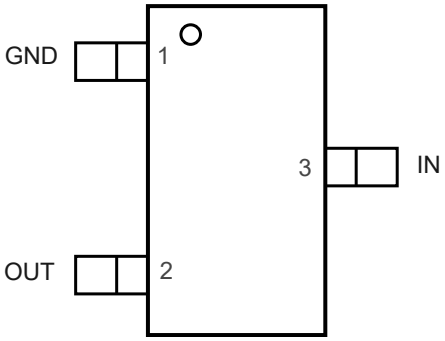

TPL820
SOT223-3 Package
Top View

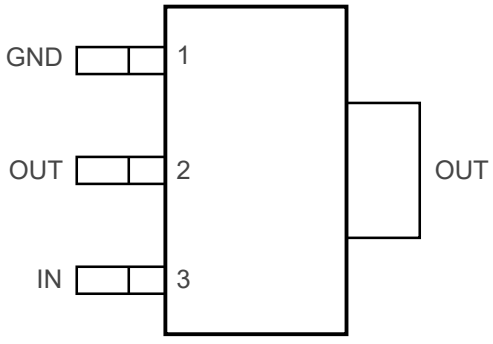

Table 1. Pin Functions: TPL820

Pin No.					Name	I/O	Description
SOT89-3	SOT23-5	SOT23-5 (B)	SOT23-3	SOT223-3			
3	1	2	3	3	IN	I	Input voltage pin.
-	3, 4	4, 5	-	-	NC	-	Not connected.
1	5	3	2	2	OUT	O	Regulated output voltage pin.
2	2	1	1	1	GND	-	Ground reference pin. Connect the GND pin to the PCB ground plane directly.

Specifications

Absolute Maximum Ratings

Parameter		Min	Max	Unit
V_{IN}	Maximum Input Voltage	−0.3	45	V
V_{OUT}	Maximum Output Voltage	−0.3	6	V
P_D	Maximum Operating Power Dissipation		1.5	W
T_J	Maximum Junction Temperature	−40	150	°C
T_{STG}	Storage Temperature Range	−65	150	°C
T_L	Lead Temperature (Soldering, 10 sec)		260	°C

(1) Stresses beyond those listed under Absolute Maximum Ratings may cause permanent damage to the device. Exposure to any Absolute Maximum Rating condition for extended periods may affect device reliability and lifetime.
(2) All voltage values are with respect to GND.

ESD, Electrostatic Discharge Protection

Symbol	Parameter	Condition	Minimum Level	Unit
HBM	Human Body Model ESD	ANSI/ESDA/JEDEC JS-001 (1)	±2.5	kV
CDM	Charged Device Model ESD	ANSI/ESDA/JEDEC JS-002 (2)	±2	kV

(1) JEDEC document JEP155 states that 500-V HBM allows safe manufacturing with a standard ESD control process.
(2) JEDEC document JEP157 states that 250-V CDM allows safe manufacturing with a standard ESD control process.

Recommended Operating Conditions

Parameter		Min	Max	Unit
V_{IN}	Input Voltage	3.6	42	V
V_{OUT}	Output Voltage	1.2	5	V
I_{OUT}	Output Current	0	180	mA
T_J	Operating Junction Temperature Range	−40	125	°C
P_D	Power Dissipation (SOT89-3 Package)	0	1000	mW
	Power Dissipation (SOT23-5 Package)	0	300	mW
	Power Dissipation (SOT23-3 Package)	0	300	mW
	Power Dissipation (SOT223-3 Package)	0	1000	mW

Thermal Information

Package Type	θ_{JA}	θ_{JC}	Unit
SOT89-3	63.0	9.41	°C/W
SOT23-5	176	62	°C/W

Package Type	θ_{JA}	θ_{JC}	Unit
SOT23-3	211	62	°C/W
SOT223-3	65	39	°C/W

Electrical Characteristics

All test conditions: V_{IN} = $V_{OUT\ (NOM)}$ + 1 V or 3.6 V, whichever is greater; C_{OUT} = 2.2 µF, T_A = +25°C, unless otherwise noted.

Symbol	Parameter	Conditions	Min	Typ	Max	Unit
Supply Input Voltage and Current						
V_{IN}	Input Voltage Range		3.6		42	V
I_Q	Quiescent Current	I_{OUT} = 0 mA		2	5	µA
		I_{OUT} = 180 mA		390		µA
UVLO	V_{IN} Under-Voltage Lock-out	V_{IN} rising		2.9		V
Regulated Output Voltage and Current						
V_{OUT}	Output Voltage Accuracy	T_J = +25°C		1%		
		−40°C ≤ T_J ≤ +125°C	−2%		2%	
$\triangle V_{OUT}$	Line Regulation	V_{IN} = $V_{OUT\ (NOM)}$ + 1 V to 42 V, or V_{IN} ≥ 3.6 V , I_{OUT} = 1 mA		3		mV
	Load Regulation	I_{OUT} = 1 mA to 180 mA		20		mV
V_{DO} (1)	Dropout Voltage	V_{IN} = 0.98 × $V_{OUT\ (NOM)}$, I_{OUT} = 50 mA		200	600	mV
		V_{IN} = 0.98 × $V_{OUT\ (NOM)}$, I_{OUT} = 180 mA		720		mV
I_{OUT}	Output Current	V_{OUT} in regulation	0		180	mA
I_{CL}(2)	Output Current Limit	V_{OUT} = 0.9 × $V_{OUT\ (NOM)}$	180		800	mA
PSRR	Power Supply Rejection Ratio	I_{OUT} = 10 mA, f = 100 Hz, C_{OUT} = 4.7 µF		75		dB
		I_{OUT} = 10 mA, f = 1 kHz, C_{OUT} = 4.7 µF		65		dB
		I_{OUT} = 10 mA, f = 10 kHz, C_{OUT} = 4.7 µF		65		dB
V_N	Output Noise Voltage	I_{OUT} = 10 mA, BW = 10 Hz to 100 kHz		110		μV_{RMS}
		I_{OUT} = 10 mA, BW = 100 Hz to 100 kHz		70		μV_{RMS}
Temperature Range						
T_{SD}	Thermal Shutdown Threshold			160		ºC
	Hysteresis			40		ºC

(1) The dropout voltage is the minimum input to output voltage differential needed to maintain regulation at a specified output current. In dropout, the output voltage will be equal to V_{IN} − V_{DD}.

(2) Measured with V_{IN} = V_{OUT} +2.5 V.

Typical Performance Characteristics

All test conditions: V_{IN} = $V_{OUT\ (NOM)}$ +1 V or 3.6 V, whichever is greater; C_{OUT} = 2.2 µF, T_A = +25°C, unless otherwise noted.

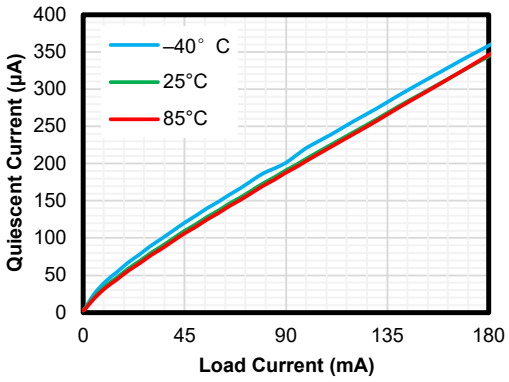

Figure 1. Quiescent Current vs. Output Current

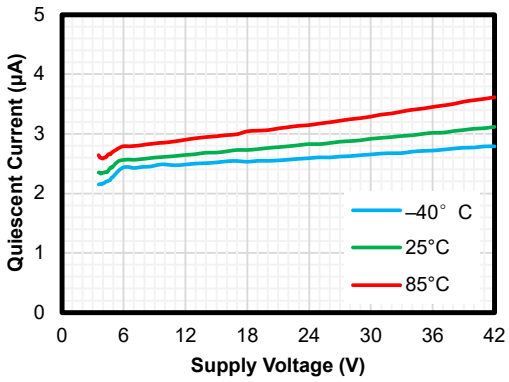

Figure 2. Quiescent Current vs. Input Voltage

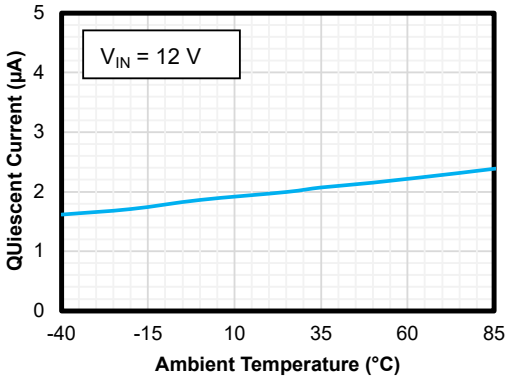

Figure 3. Quiescent Current vs. Ambient Temperature

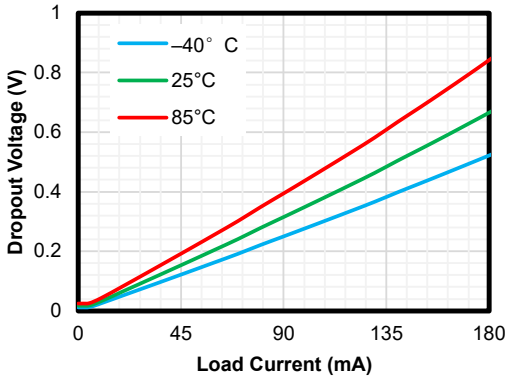

Figure 4. Dropout Voltage vs. Output Current

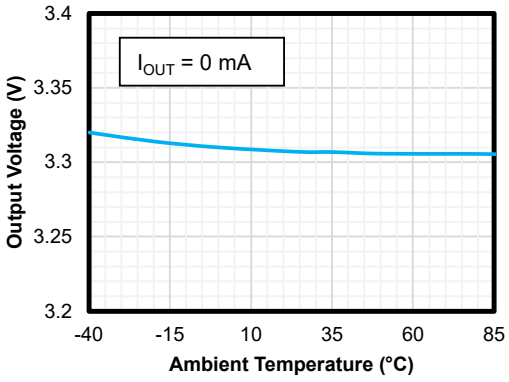

Figure 5. Output Accuracy vs. Ambient Temperature

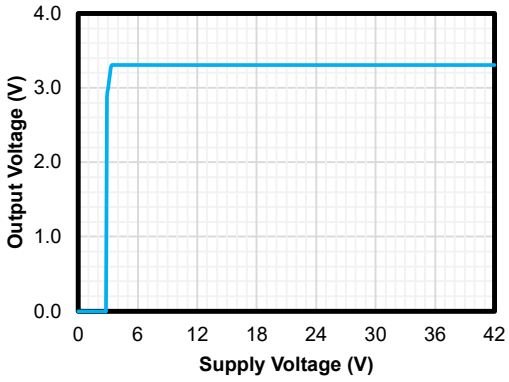

Figure 6. Output Voltage vs. Input Voltage

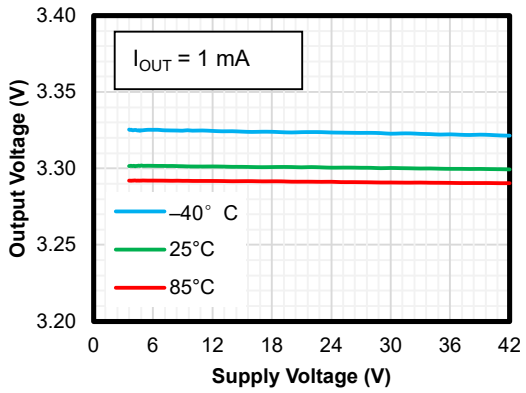

Figure 7. Line Regulation

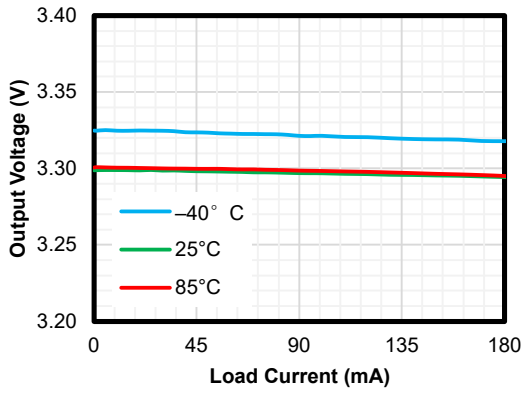

Figure 8. Load Regulation

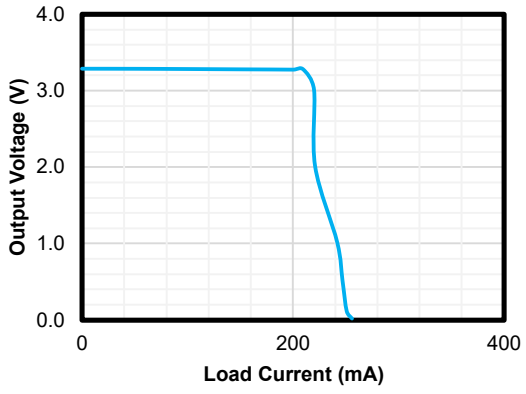

Figure 9. Current Limit

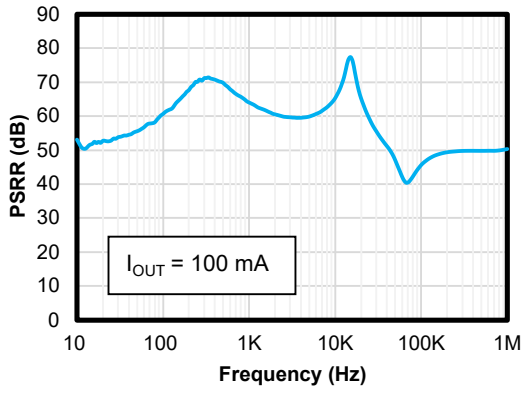

Figure 10. PSRR

Detailed Description

Overview

The TPL820 is a series of 180-mA wide input range linear regulators with a very low quiescent current. The voltage regulator operates from 3.6 V to 42 V and consumes a 2-μA quiescent current at no load.

The TPL820 series is available in fixed output voltage versions of 3 V, 3.3 V and 5 V with ±2% output voltage accuracy over operating conditions.

Functional Block Diagram

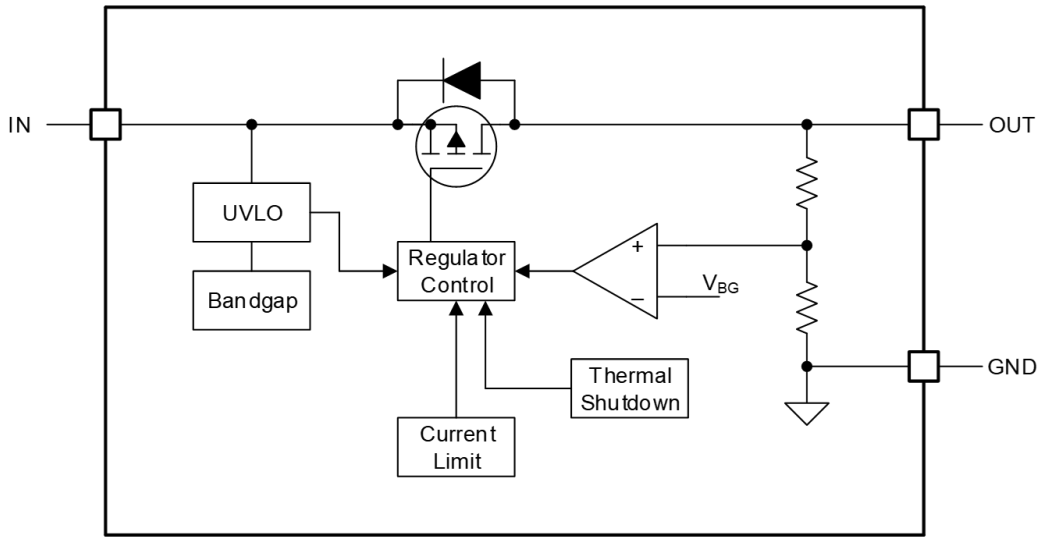

Figure 11. TPL820 Series

Feature Description

Under-Voltage Lockout (UVLO)

The TPL820 series uses an under-voltage lock-out circuit (UVLO = 2.9 V) to keep the output shut off until the internal circuitry operates properly.

Regulated Output Voltage

The TPL820 series is available in fixed voltage versions of 3 V, 3.3 V, and 5 V. When the input voltage is higher than $V_{OUT\ (NOM)}$ + V_{DO} or 3.6 V, the output pin is the regulated output based on the selected voltage version. When the input voltage falls below $V_{OUT\ (NOM)}$ + V_{DO} or 3.6 V, the output pin tracks the input voltage minus the dropout voltage based on the load current. When the input voltage drops below the UVLO threshold, the output keeps shutting off.

Current Limit

The TPL820 series integrates an internal current limit that helps to protect the regulator during fault conditions. The output voltage is not regulated when the device is in the current limit mode and is $V_{OUT} = I_{CL} \times R_{LOAD}$.

Thermal Shutdown

During normal operation, the LDO junction temperature should not exceed 125°C. When the junction temperature exceeds the thermal shutdown threshold, the LDO shuts down the output immediately. When the junction temperature falls below the thermal shutdown threshold minus thermal shutdown hysteresis, the output turns on again.

Application and Implementation

> Note
>
> Information in the following application sections is not part of the 3PEAK's component specification and 3PEAK does not warrant its accuracy or completeness. 3PEAK's customers are responsible for determining suitability of components for their purposes. Customers should validate and test their design implementation to confirm system functionality.

Application Information

The TPL820 series is a 42-V 180-mA wide input range linear regulator with a very low quiescent current. The following application schematic shows a typical usage of the TPL820 series.

Typical Application

Figure 12 shows the typical application schematic of the TPL820 series.

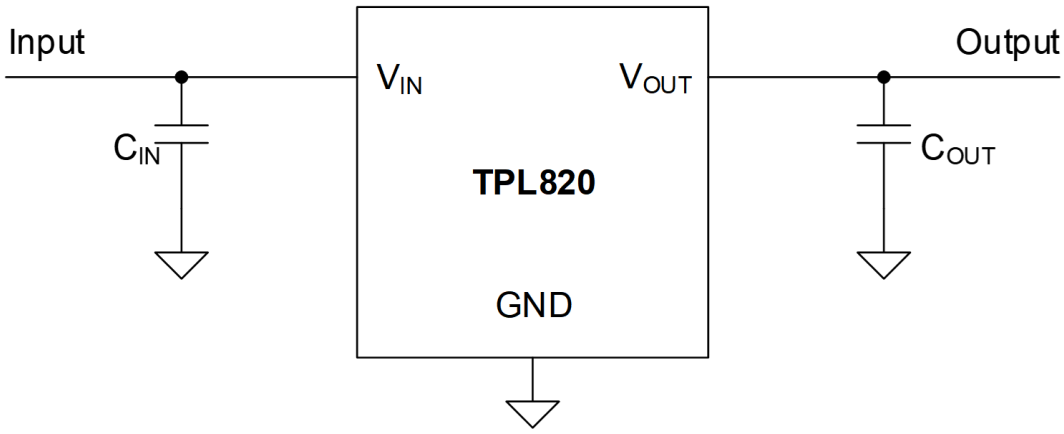

Figure 12. TPL820 Typical Application

Input Capacitor and Output Capacitor

3PEAK recommends adding a 2.2-μF or greater capacitor with a 0.1-μF bypass capacitor in parallel at the IN pin to keep the input voltage stable. An aluminum electrolytic capacitor or other capacitors with high capacitance is suggested for the system power with a large voltage spike. The voltage rating of the capacitors must be greater than the maximum input voltage.

To ensure loop stability, the TPL820 series requires an output capacitor with an effective capacitance value of 2.2 μF to 22 μF. 3PEAK recommends selecting an X5R- or X7R-type 4.7-μF ceramic capacitor with low ESR over the temperature range.

Both input and output capacitors must be placed as close to the device pins as possible.

Power Dissipation

During normal operation, the LDO junction temperature should not exceed 125°C. Use the equations below to calculate the power dissipation and estimate the junction temperature.

The power dissipation can be calculated using Equation 1.

$$P_D = (V_{IN} - V_{OUT}) \times I_{OUT} + V_{IN} \times I_{GND} \quad (1)$$

The junction temperature can be estimated using Equation 2. θ_{JA} is the junction-to-ambient thermal resistance (See Thermal Information).

$$T_J = T_A + P_D \times \theta_{JA} \quad (2)$$

Layout

Layout Guideline

- Both input and output capacitors must be placed as close to the device pins as possible.
- It is recommended to bypass the input pin to ground with a 0.1-μF bypass capacitor. The loop area formed by the bypass capacitor connection, the IN pin, and the GND pin of the system must be as small as possible.
- It is recommended to use wide trace lengths or thick copper weight to minimize I×R drop and heat dissipation.

Tape and Reel Information

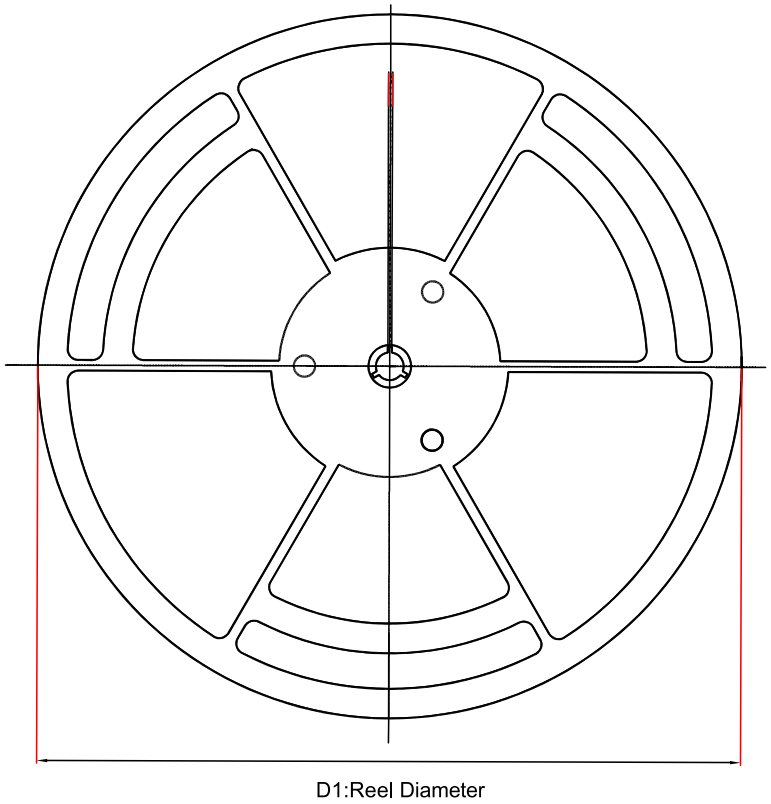

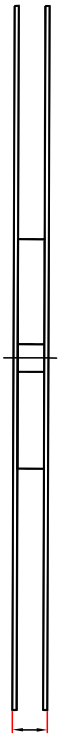

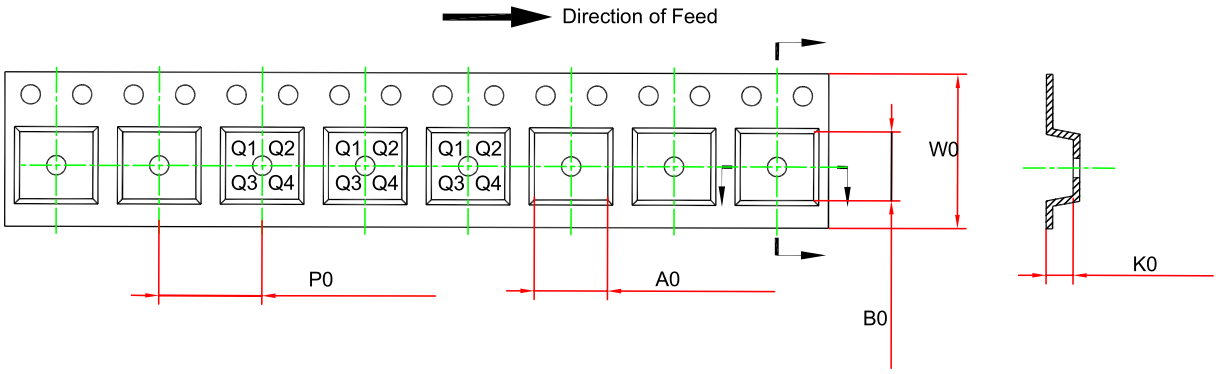

Order Number	Package	D1 (mm)	W1 (mm)	A0 (mm)	B0 (mm)	K0 (mm)	P0 (mm)	W0 (mm)	Pin1 Quadrant
TPL820Fxx-89 TR	SOT89-3	330	17.6	4.8	4.4	1.8	8	12	Q3
TPL820Fxx-5T R	SOT23-5	180	13.1	3.2	3.2	1.4	4	8	Q3
TPL820Uxx-5T R	SOT23-5	180	13.1	3.2	3.2	1.4	4	8	Q3

Order Number	Package	D1 (mm)	W1 (mm)	A0 (mm)	B0 (mm)	K0 (mm)	P0 (mm)	W0 (mm)	Pin1 Quadrant
TPL820Fxx-3TR	SOT23-3	180	13.1	3.18	3.28	1.32	4	8	Q3
TPL820Fxx-ST4R	SOT223-3	330	12.3	6.8	7.3	1.9	8	12.2	Q3

(1) Output voltage value, xx = 30 to 50, e.g., 33 means 3.3 V output voltage.

Package Outline Dimensions

SOT89-3

Package Outline Dimensions 89T(SOT89-3-A)

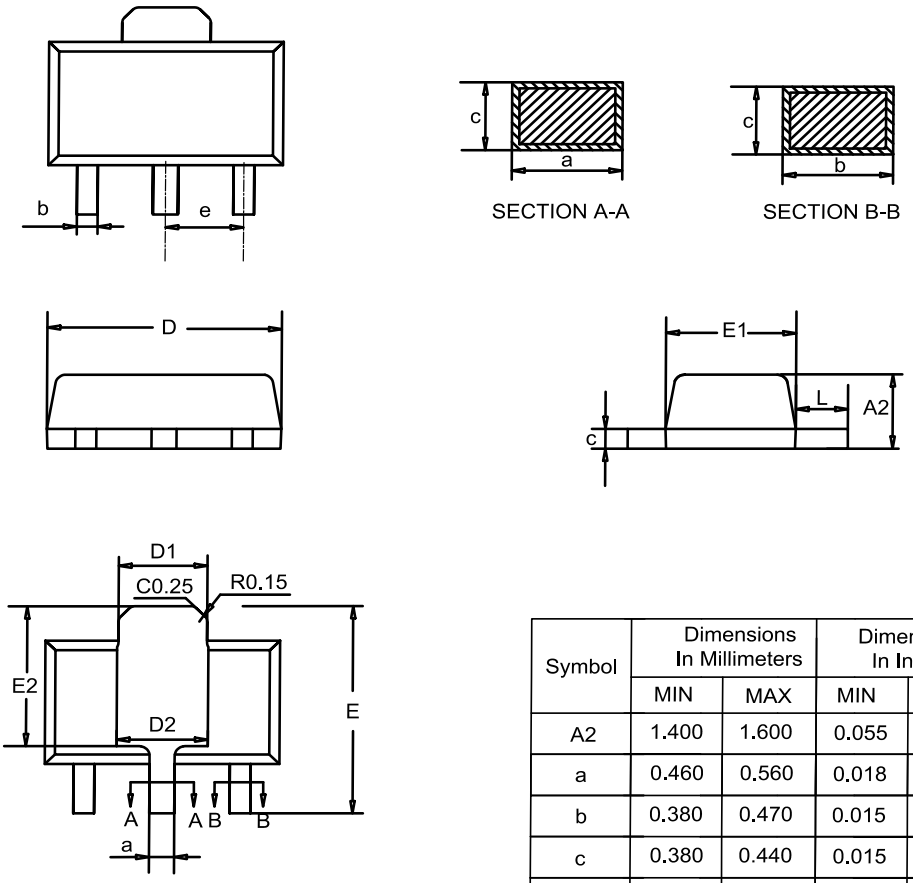

Symbol	Dimensions In Millimeters		Dimensions In Inches	
	MIN	MAX	MIN	MAX
A2	1.400	1.600	0.055	0.063
a	0.460	0.560	0.018	0.022
b	0.380	0.470	0.015	0.019
c	0.380	0.440	0.015	0.017
D	4.400	4.600	0.173	0.181
D1	1.600	1.830	0.063	0.072
E	3.950	4.250	0.156	0.167
E1	2.400	2.600	0.094	0.102
e	1.500 BSC		0.059 BSC	
D2	1.600	1.900	0.063	0.075
E2	2.700	3.100	0.106	0.122
L	0.890	1.200	0.035	0.047

NOTES

1. Do not include mold flash or protrusion.
2. This drawing is subject to change without notice.

SOT23-5

Package Outline Dimensions S5T(SOT23-5-A)

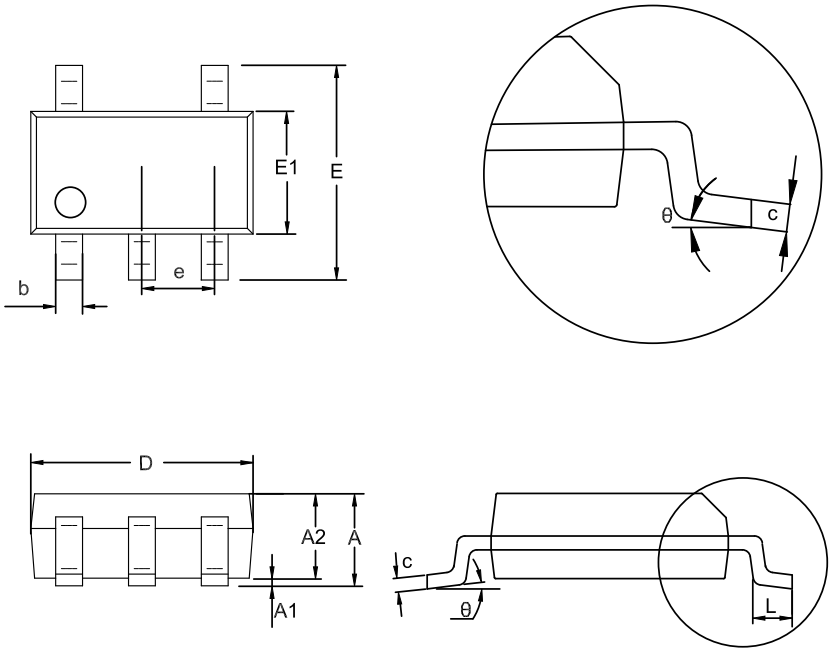

Symbol	Dimensions In Millimeters		Dimensions In Inches	
	MIN	MAX	MIN	MAX
A	1.050	1.250	0.041	0.049
A1	0.000	0.150	0.000	0.006
A2	1.000	1.200	0.039	0.047
b	0.280	0.500	0.011	0.020
c	0.100	0.230	0.004	0.009
D	2.820	3.020	0.111	0.119
E	2.600	3.000	0.102	0.118
E1	1.500	1.720	0.059	0.068
e	0.950 BSC		0.037 BSC	
L	0.300	0.600	0.012	0.024
θ	0	8°	0	8°

NOTES

1. Do not include mold flash or protrusion.
2. This drawing is subject to change without notice.

SOT23-3

Package Outline Dimensions S3T(SOT23-3-A)

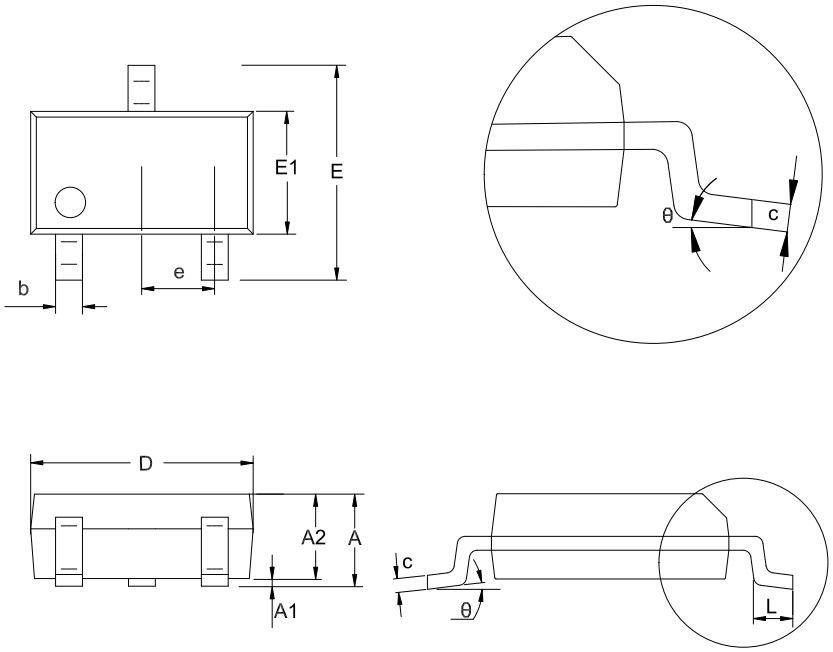

Symbol	Dimensions In Millimeters		Dimensions In Inches	
	MIN	MAX	MIN	MAX
A	1.050	1.250	0.041	0.049
A1	0.000	0.150	0.000	0.006
A2	1.000	1.200	0.039	0.047
b	0.280	0.500	0.011	0.020
c	0.100	0.230	0.004	0.009
D	2.820	3.020	0.111	0.119
E	2.600	3.000	0.102	0.118
E1	1.500	1.720	0.059	0.068
e	0.950 BSC		0.037 BSC	
L	0.300	0.600	0.012	0.024
θ	0	8°	0	8°

NOTES

1. Do not include mold flash or protrusion.
2. This drawing is subject to change without notice.

SOT223-3

Package Outline Dimensions ST4(SOT223-3-A)

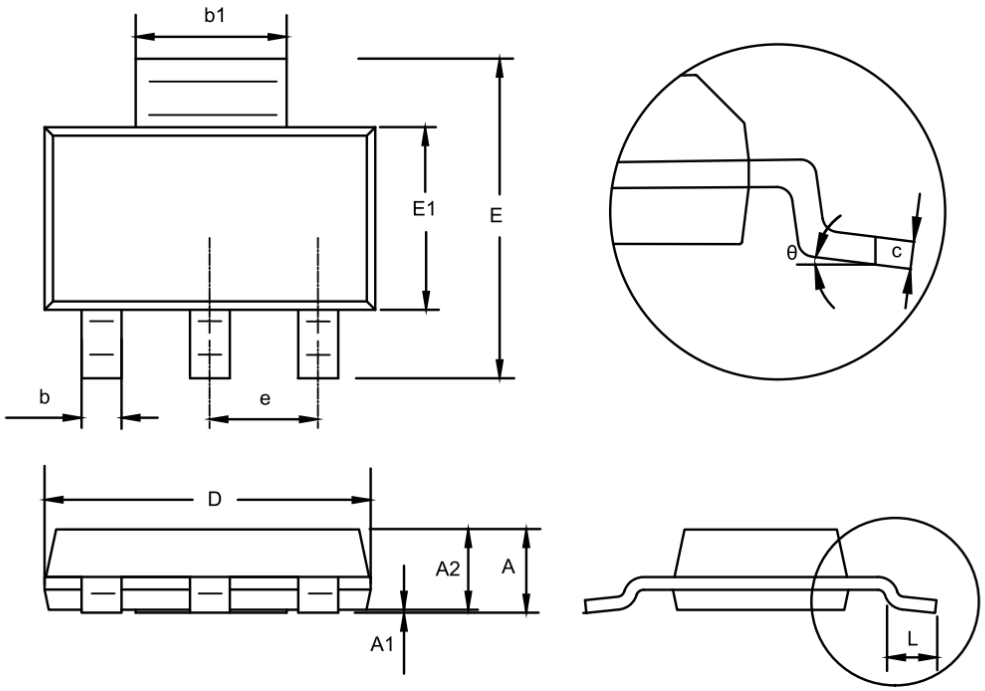

Symbol	Dimensions In Millimeters		Dimensions In Inches	
	MIN	MAX	MIN	MAX
A	1.520	1.800	0.060	0.071
A1	0.020	0.100	0.001	0.004
A2	1.500	1.700	0.059	0.067
b	0.660	0.840	0.026	0.033
b1	2.900	3.100	0.114	0.122
c	0.230	0.350	0.009	0.014
D	6.300	6.700	0.248	0.264
E	6.700	7.300	0.264	0.287
E1	3.300	3.700	0.130	0.146
e	2.300 BSC		0.091 BSC	
L	0.750	1.150	0.030	0.045
θ	0	10°	0	10°

NOTES

1. Do not include mold flash or protrusion.
2. This drawing is subject to change without notice.

Order Information

Order Number	Operating Temperature Range	Package	Marking Information	MSL	Transport Media, Quantity	Eco Plan
TPL820F30-89TR	−40 to 125°C	SOT89-3	L5I	3	Tape and Reel, 4,000	Green
TPL820F33-89TR	−40 to 125°C	SOT89-3	L5J	3	Tape and Reel, 4,000	Green
TPL820F50-89TR	−40 to 125°C	SOT89-3	L5K	3	Tape and Reel, 4,000	Green
TPL820F33-5TR	−40 to 125°C	SOT23-5	L5J	3	Tape and Reel, 3,000	Green
TPL820F50-5TR	−40 to 125°C	SOT23-5	L5K	3	Tape and Reel, 3,000	Green
TPL820U33-5TR	−40 to 125°C	SOT23-5 (B)	L5Q	3	Tape and Reel, 3,000	Green
TPL820U50-5TR	−40 to 125°C	SOT23-5 (B)	L5R	3	Tape and Reel, 3,000	Green
TPL820F33-3TR	−40 to 125°C	SOT23-3	L5J	3	Tape and Reel, 3,000	Green
TPL820F50-3TR	−40 to 125°C	SOT23-3	L5K	3	Tape and Reel, 3,000	Green
TPL820F33-ST4R	−40 to 125°C	SOT223-3	L5J	3	Tape and Reel, 4,000	Green
TPL820F50-ST4R	−40 to 125°C	SOT223-3	L5K	3	Tape and Reel, 4,000	Green

Green: 3PEAK defines "Green" to mean RoHS compatible and free of halogen substances.

IMPORTANT NOTICE AND DISCLAIMER

Copyright© 3PEAK 2012-2024. All rights reserved.

Trademarks. Any of the 思瑞浦 or 3PEAK trade names, trademarks, graphic marks, and domain names contained in this document /material are the property of 3PEAK. You may NOT reproduce, modify, publish, transmit or distribute any Trademark without the prior written consent of 3PEAK.

Performance Information. Performance tests or performance range contained in this document/material are either results of design simulation or actual tests conducted under designated testing environment. Any variation in testing environment or simulation environment, including but not limited to testing method, testing process or testing temperature, may affect actual performance of the product.

Disclaimer. 3PEAK provides technical and reliability data (including data sheets), design resources (including reference designs), application or other design recommendations, networking tools, security information and other resources "As Is". 3PEAK makes no warranty as to the absence of defects, and makes no warranties of any kind, express or implied, including without limitation, implied warranties as to merchantability, fitness for a particular purpose or non-infringement of any third-party's intellectual property rights. Unless otherwise specified in writing, products supplied by 3PEAK are not designed to be used in any life-threatening scenarios, including critical medical applications, automotive safety-critical systems, aviation, aerospace, or any situations where failure could result in bodily harm, loss of life, or significant property damage. 3PEAK disclaims all liability for any such unauthorized use.

ENTEGRECİ

Bu belge www.entegreci.com üzerinden sunulmaktadır.

Elektronik komponent tedarikinde Entegreci

Entegreci, Eskişehir merkezli, Türkiye geneline satış yapan bir elektronik komponent mağazasıdır. Entegreler (IC), mikrodenetleyiciler, transistörler, diyotlar, pasif elemanlar, konnektörler, modüller ve geliştirme kartları tek adetten seri üretim adetlerine kadar satılır. Ürün sayfalarında güncel stok durumunu, fiyatı ve datasheet bağlantısını bulabilirsiniz.

Parça koduyla arama

Üretici parça numarasını yazın; stok ve fiyatı hemen görün.

www.entegreci.com

Ürün kategorileri

Entegreden kapasitöre tüm elektronik komponent kategorileri.

Kategorilere göz atın

Üreticiler

Aradığınız üreticinin ürünlerini tek sayfada inceleyin.

Üreticileri görün

Toplu alım ve teklif

Listede olmayan ya da yüksek adetli parçalar için teklif isteyin.

Teklif isteyin

www.entegreci.com | **destek@entegreci.com** | **0850 305 90 34**

Entegreci is an online electronic components store based in Türkiye. Search by manufacturer part number to see stock, prices and datasheets for integrated circuits, microcontrollers, transistors, passive components and connectors, or request a quote for parts that are not listed.

Bu sayfa Entegreci tarafından eklenmiştir. Belgenin önceki sayfaları asıl yayıncısına aittir ve içeriği değiştirilmemiştir; en güncel sürüm için belgenin yayıncısına başvurun.