42-V/250-mA High-Precision Voltage-Tracking Low-Dropout Linear Regulator

Features

- Qualified for Automotive Applications:
  - AEC-Q100 Grade 1, T_A: −40°C to +125°C
  - Junction Temperature, T_J: −40°C to +150°C
- Wide Input Voltage Range:
  - −40 V to 45-V Maximum Rating
  - 3.5-V to 42-V Operating Voltage Range
- Adjustable Output Voltage:
  - 1.5 V to 18 V
- Excellent Output Tracking Tolerance: ±4 mV
- Maximum 250-mA Output Current Capability
- Low Dropout Voltage: 340 mV Typical at 200 mA
- Integrated Full Protection:
  - Input Reverse Polarity Protection
  - Output Short-Circuit to Ground Protection
  - Output Short-Circuit to Battery Protection
  - Inductive Clamp at the OUT Pin
  - Over-Current Protection
  - Over-Temperature Protection
- Package Options:
  - ESOP8

Applications

- Automotive Off-Board Sensor Power Supply
- Automotive Body Control, HVAC
- Automotive Infotainment, Navigation, Telematics
- Automotive ADAS, Surround-View Cameras
- Automotive Power Train, Transmission

Description

The TPL8602FQ is a series of low-dropout linear regulators with 250-mA maximum output current capability. The TPL8602FQ series supports an operating voltage range from 3.5 V to 42 V (−40-V to 45-V maximum operating voltage range). Operating with as low as 3.5 V allows TPL8602FQ to continue to work well during cold-crank and start-stop conditions.

The TPL8602FQ supports an output capacitor range from 1 µF to 100 µF with an ESR range from 0.001 Ω to 5 Ω.

The TPL8602FQ integrates full protection with input reverse polarity protection, output short-circuits to ground protection, output short-circuits to battery protection, inductive clamp at the OUT pin, over-current protection, and over-temperature protection.

With all the above features, the TPL8602FQ series is especially suitable for the off-board power supply through a long cable away from the main board in different automotive and industrial systems.

The TPL8602FQ series provides a thermal-enhanced ESOP8 package to enable sustained operation despite significant dissipation across the device. The TPL8602FQ series is guaranteed to operate with an ambient temperature range from −40°C to +125°C.

Typical Application Circuit

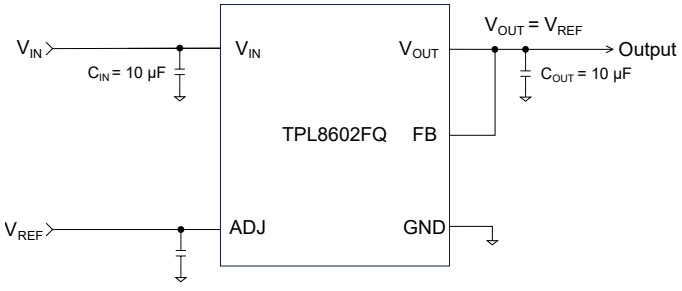

Table of Contents

Features 1
Applications 1
Description 1
Typical Application Circuit 1
Product Family Table 3
Revision History 3
Pin Configuration and Functions 4
Specifications 5
Absolute Maximum Ratings 5
ESD, Electrostatic Discharge Protection 5
Recommended Operating Conditions 5
Thermal Information 6
Electrical Characteristics 7
Typical Performance Characteristics 9
Detailed Description 11
Overview 11
Functional Block Diagram 11
Feature Description 11
Application and Implementation 14
Application Information 14
Typical Application 14
Layout 15
Layout Guideline 15
Layout Example 15
Tape and Reel Information 16
Package Outline Dimensions 17
ESOP8 17
Order Information 18
IMPORTANT NOTICE AND DISCLAIMER 19

Product Family Table

Order Number	FB PIN	Package
TPL8602FQ-ES1R-S	With FB PIN	ESOP8

Revision History

Date	Revision	Notes
2025-03-18	Rev.A.0	Initial release
2025-11-03	Rev.A.1	The following updates are about typos, the actual product remains unchanged. • Corrected the Marking Information typo.

Pin Configuration and Functions

TPL8602FQ
ESOP8 Package
Top View

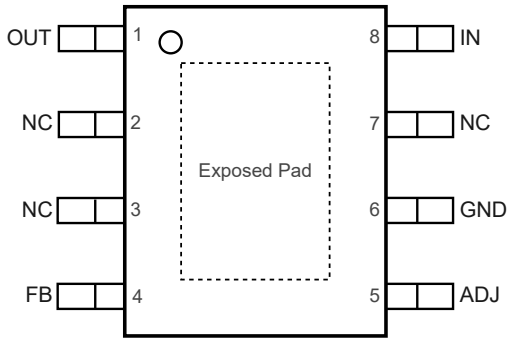

Table 1. Pin Functions: TPL8602FQ

Name	Pin No.	I/O	Description
ADJ	5	I	Adjustable pin. Connect reference input voltage to this pin. A capacitor is recommended for long cable compensation.
FB	4	I	Output feedback pin. Connect an external resistor divider to adjust the output voltage.
GND	6	–	Ground reference pin. Connect the GND pin to the PCB ground plane directly.
IN	8	I	Input voltage pin.
NC	2, 3, 7	–	Not internally connected. Suggest connected to GND to improve thermal performance.
OUT	1	O	Regulated output voltage pin.
Exposed PAD	–	–	Exposed PAD must be connected to a large-area ground plane directly to maximize the thermal performance.

Specifications

Absolute Maximum Ratings

Parameter		Min	Max	Unit
IN		−40	45	V
ADJ		−0.3	45	V
FB		−1	45	V
OUT		−1	45	V
IN – OUT	Input and Output Voltage Difference	−40	45	V
ADJ − OUT	ADJ and Output Voltage Difference		18	V
T_J	Junction Temperature Range	−40	150	°C
T_{STG}	Storage Temperature Range	−65	150	°C
T_L	Lead Temperature (Soldering 10 sec)		260	°C

(1) Stresses beyond those listed under Absolute Maximum Ratings may cause permanent damage to the device. Exposure to any Absolute Maximum Rating condition for extended periods may affect device reliability and lifetime.
(2) All voltage values are with respect to GND.
(3) Not subject to production test, specified by design.
(4) When (ADJ - IN) voltage is higher than 18 V, the (ADJ - OUT) voltage should maintain lower than 18 V, otherwise the device can be damaged.

ESD, Electrostatic Discharge Protection

Symbol	Parameter	Condition	Minimum Level	Unit
HBM	Human Body Model ESD	AEC Q100-002	±2	kV
CDM	Charged Device Model ESD	AEC Q100-011	±1	kV

Recommended Operating Conditions

Parameter		Min	Max	Unit
IN		3.5	42	V
ADJ		1.5	18	V
FB		1.5	18	V
OUT		0	18	V
C_{OUT}	Output Capacitor Requirements	1	100	μF
ESR	Output Capacitor ESR Requirements	0.001	5	Ω
T_A	Ambient Temperature Range	−40	125	°C
T_J	Junction Temperature Range	−40	150	°C

Thermal Information

Package Type	θ_{JA}	θ_{JB}	θ_{JC}	Unit
ESOP8	32	11	44	°C/W

Electrical Characteristics

All test conditions: V_{IN} = 13.5 V, 1.5 V ≤ V_{ADJ} ≤ 18 V; C_{IN} = C_{OUT} = 10 μF, I_{OUT} = 0.1 mA. T_A = −40°C to +125°C, unless otherwise noted.

Symbol	Parameter	Conditions	Min	Typ	Max	Unit
Supply Input Voltage and Current						
V_{IN}	Input Supply Voltage Range (1)		$V_{IN,MIN}$		42	V
UVLO	V_{IN} Under-Voltage Lockout Threshold	V_{IN} rising, I_{OUT} = 0.1 mA			3.5	V
	Hysteresis			200		mV
I_Q	Quiescent Current	V_{ADJ} ≤ 0.8 V		5	12	μA
		V_{ADJ} = 5 V, I_{OUT} = 0.1 mA		50	100	μA
FB Current						
I_{FB}	FB Pin Leakage Current	V_{ADJ} = V_{FB} = 5 V		0.05	0.2	μA
ADJ Voltage and Current						
$V_{IH, ADJ}$	ADJ Logic-Input High Level	V_{OUT} in regulation	1.5		18	V
$V_{IL, ADJ}$	ADJ Logic-Input Low Level	V_{OUT} = 0 V	0		0.8	V
I_{ADJ}	ADJ Pin Leakage Current	V_{ADJ} = 5 V		0.4	1	μA
Output Voltage and Current						
V_{OUT}	Output Voltage Tracking Tolerance	V_{IN} = 3.5 V to 22 V, V_{ADJ} = V_{IN} − 1 V (1.5 V to 18 V), I_{OUT} = 0.1 mA to 150 mA	−4		4	mV
		V_{IN} = 3.5 V to 36 V, V_{ADJ} = V_{IN} − 1 V (1.5 V to 18 V), I_{OUT} = 0.1 mA to 70 mA	−4		4	mV
ΔV_{OUT}	Line Regulation	V_{IN} = 6 V to 36 V, V_{ADJ} = 5 V, I_{OUT} = 10 mA	−4		4	mV
	Load Regulation	V_{ADJ} = 5 V, I_{OUT} = 1 mA to 150 mA	−4		4	mV
V_{DO}	Dropout Voltage (2)	I_{OUT} = 200 mA, V_{ADJ} = 5 V		340	550	mV
I_{OUT}	Output Current Range	V_{OUT} in regulation	0		250	mA
I_{CL}	Output Current Limit	V_{ADJ} = 5 V, V_{OUT} = V_{ADJ} − 0.1V	251	500	600	mA
I_{REV}	Output Reverse Current	V_{IN} = 0 V, V_{ADJ} = 5 V, force 42 V to OUT	−10			μA
	Input Reverse Polarity Current	V_{IN} = −42 V, V_{ADJ} = 5 V, V_{OUT} = 0 V	−8			μA
t_{SU}	Start-Up Time (3)	V_{ADJ} = 5 V, I_{OUT} = 250 mA, from V_{IN} ↑ to 95%*V_{OUT}		200		μs
PSRR and Output Noise						
PSRR	Power Supply Rejection Ratio (3)	V_{ADJ} = 5 V, I_{OUT} = 10 mA,		80		dB

Symbol	Parameter	Conditions	Min	Typ	Max	Unit
		f = 100 Hz				
		V_{ADJ} = 5 V, I_{OUT} = 10 mA, f = 1 kHz		65		dB
		V_{ADJ} = 5 V, I_{OUT} = 10 mA, f = 100 kHz		55		dB
V_N	Output RMS noise (3)	V_{OUT} = 5 V, I_{OUT} = 10 mA, 10 Hz to 100 kHz		25		μV_{RMS}
Temperature Range						
T_{SD}	Thermal Shutdown Threshold (3)			175		°C
	Thermal Shutdown Hysteresis (3)			15		°C

(1) $V_{IN, MIN}$ = 3.5 V or $V_{OUT, NOM}$ + $V_{DO, MAX}$, whichever is greater.

(2) Dropout voltage is the minimum input-to-output voltage differential needed to maintain regulation at a specified output current. Dropout voltage is measured when the output voltage has dropped 100 mV from the nominal value. In dropout, the output voltage is equal to (V_{IN} – V_{DO}).

(3) Not tested during production, guaranteed by design.

Typical Performance Characteristics

All test conditions: V_{IN} = 13.5 V, V_{ADJ} = 5 V; C_{IN} = C_{OUT} = 10 µF, I_{OUT} = 0.1 mA. T_A = 25 °C, unless otherwise noted.

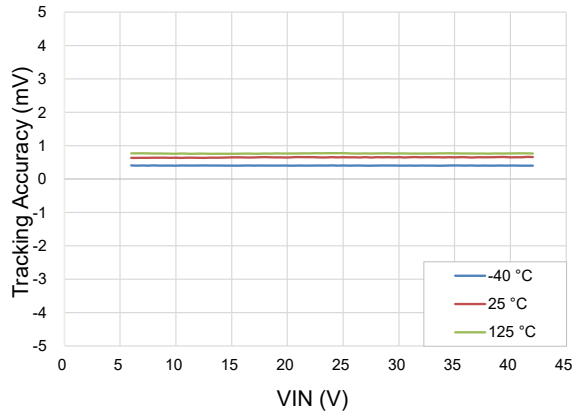

V_{ADJ} = 5 V, V_{IN} = 6 V to 42 V

Figure 1. Tracking Accuracy vs. VIN

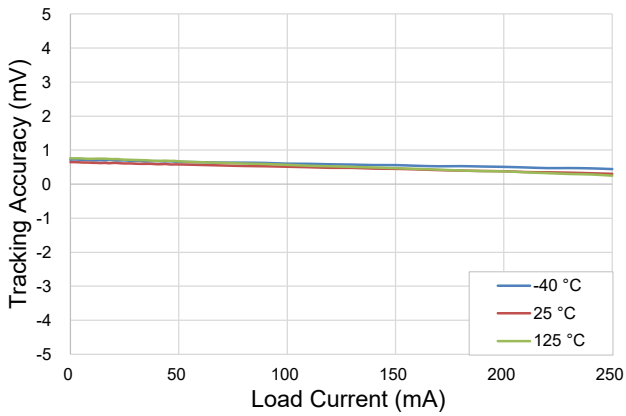

V_{ADJ} = 5 V, V_{IN} = 6 V, I_{OUT} = 0 mA to 250 mA

Figure 2. Tracking Accuracy vs. Load Current

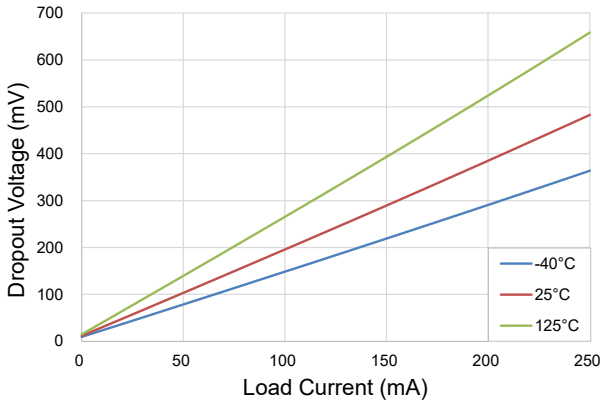

V_{IN} = V_{ADJ} = 5 V

Figure 3. Dropout Voltage vs. Load Current

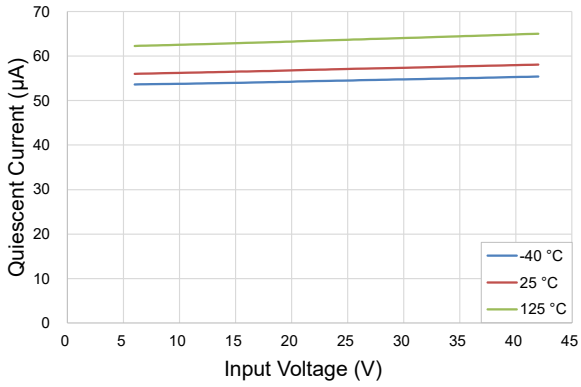

V_{ADJ} = 5 V, V_{IN} = 6 V to 42 V

Figure 4. Quiescent Current vs. Input Voltage

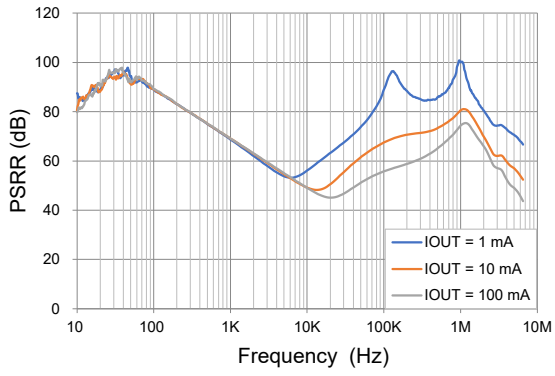

Figure 5. PSRR

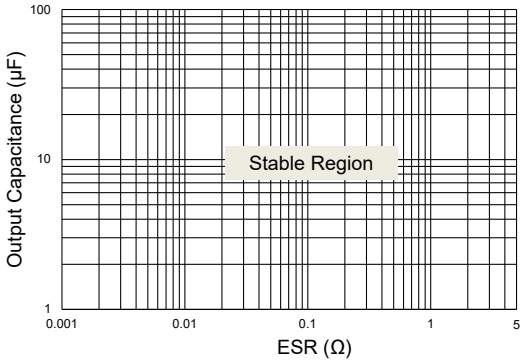

Figure 6. Output Capacitance Stability Range

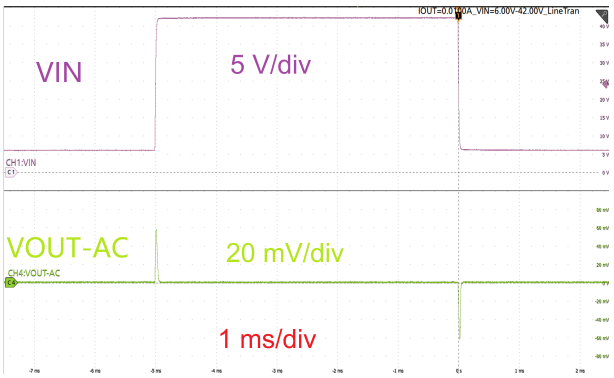

V_{IN} = 6 V to 42 V, I_{OUT} = 10 mA

Figure 7. Line Transient

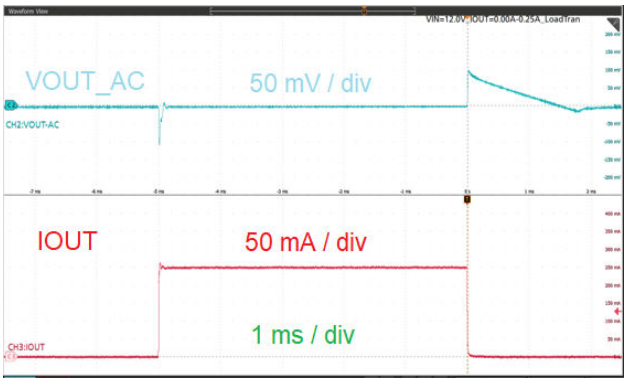

I_{OUT} = 0 mA to 250 mA

Figure 8. Load Transient

Detailed Description

Overview

The TPL8602FQ is a series of low-dropout linear regulators with 250-mA maximum output current capability. The TPL8602FQ series supports an operating voltage range from 3.5 V to 42 V (−40-V to 45-V maximum operating voltage range). Operating with as low as 3.5 V allows the TPL8602FQ to continue to work well during cold-crank and start-stop conditions.

The TPL8602FQ supports an output capacitor range from 1 μF to 100 μF with an ESR range from 0.001 Ω to 5 Ω.

The TPL8602FQ integrates full protection with input reverse polarity protection, output short-circuits to ground protection, output short-circuits to battery protection, inductive clamp at out pin, over-current protection, and over-temperature protection.

With all the above features, the TPL8602FQ series is especially suitable for the off-board power supply through a long cable away from the main board in different automotive and industrial systems.

Functional Block Diagram

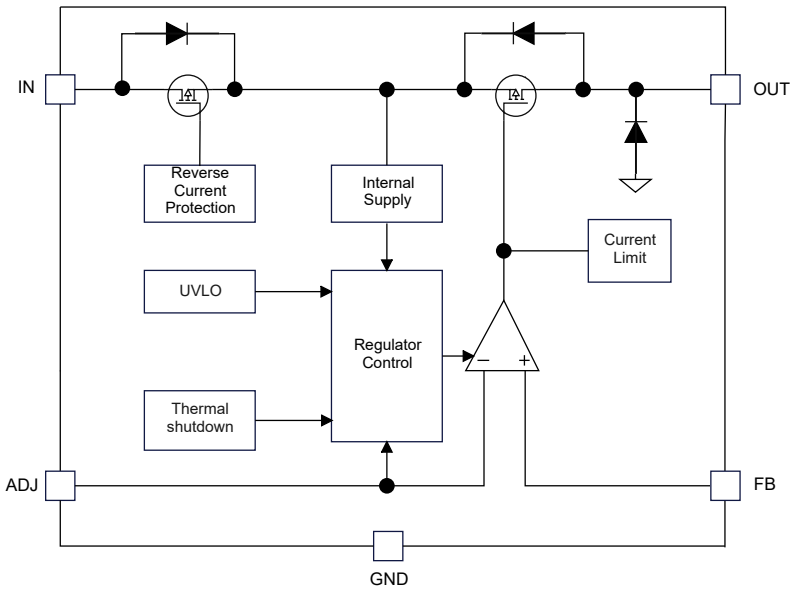

Figure 9. Functional Block Diagram

Feature Description

Under-Voltage Lockout (UVLO)

The TPL8602FQ series uses an under-voltage lockout circuit to keep the output shut off until the internal circuitry operates properly. Refer to the Electrical Characteristics table for UVLO threshold and hysteresis.

Regulated Output Voltage (OUT)

Output Voltage Equal to the ADJ Voltage

With the reference voltage applied directly at the ADJ pin and the FB pin connected to the OUT pin, the voltage at the OUT pin equals the reference voltage at the ADJ pin.

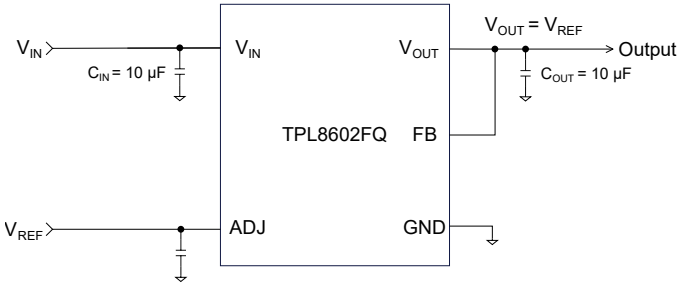

Figure 10. Output Voltage Equal to the ADJ Voltage

Output Voltage Higher than the ADJ Voltage

By using an external resistor divider connected between OUT and FB pins, an output voltage higher than the reference voltage can be generated. The recommended range for R1 and R2 is from 10 kΩ to 100 kΩ.

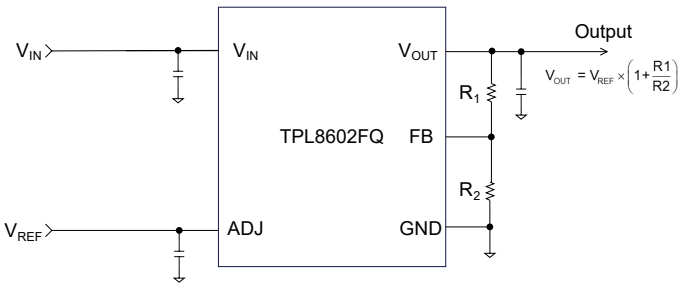

Figure 11. Output Voltage Higher than the ADJ Voltage

Output Voltage Lower than the ADJ Voltage

By using an external resistor divider connected to the ADJ pin, an output voltage lower than the reference voltage can be generated. The recommended value for both R1 and R2 is less than 100 kΩ.

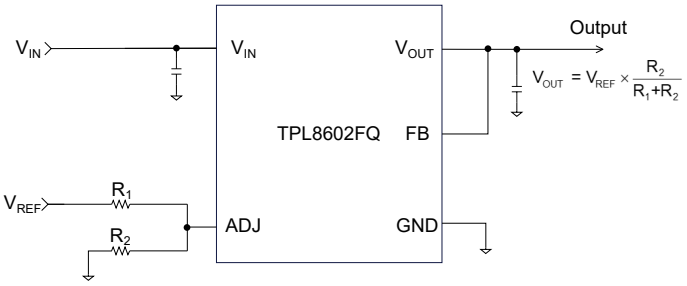

Figure 12. Output Voltage Lower than the ADJ Voltage

Output Short-Circuit to Battery Protection and Input Reverse Polarity Protection

The device can withstand a short battery. No damage to the device occurs when the OUT pin of the TPL8602FQ device is shorted to the battery.

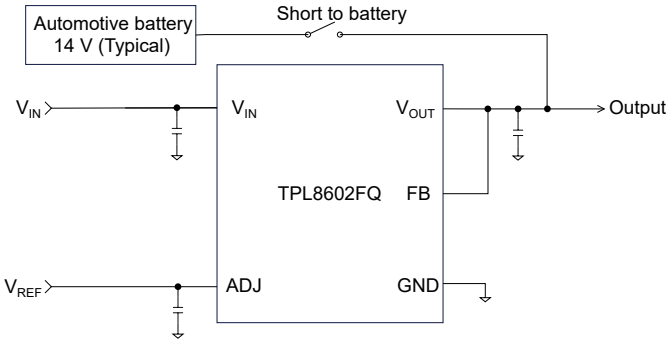

Figure 13. OUT Short to Battery

Output Inductive Clamp Protection

The cable inductance continues to source current from the output of the device when the output is turned off. The device integrates an inductive clamp at the output to help dissipate the inductive energy stored in the cable. The device integrates an internal diode between the output and ground pins.

Output Short-Circuit to Ground and Over-Current Protection

The TPL8602FQ series integrates an internal current limit that helps to protect the regulator during fault conditions, e.g., the output is shorted to ground, or the output is forced below $V_{OUT\ (NOM)}$. The output voltage is not regulated when the device is in current limit and $V_{OUT} = I_{CL} \times R_{LOAD}$.

Over-Temperature Protection

The over-temperature protection starts to work when the junction temperature exceeds the thermal shutdown (T_{SD}) threshold, which turns off the regulator immediately. When the device cools down and the junction temperature falls below the thermal shutdown threshold minus thermal shutdown hysteresis, the regulator turns on again.

The junction temperature range should be limited according to the Recommended Operating Conditions table, continuously operating above the junction temperature range reduces the lifetime of the device.

Application and Implementation

> Note
>
> Information in the following application sections is not part of the 3PEAK's component specification and 3PEAK does not warrant its accuracy or completeness. 3PEAK's customers are responsible for determining suitability of components for their purposes. Customers should validate and test their design implementation to confirm system functionality.

Application Information

The TPL8602FQ is a series of 42-V high-precision voltage-tracking low-dropout-voltage linear regulators with 250-mA maximum output current capability. The following application schematic shows a typical usage of the TPL8602FQ series.

Typical Application

Figure 14 shows the typical application schematic of the TPL8602FQ series.

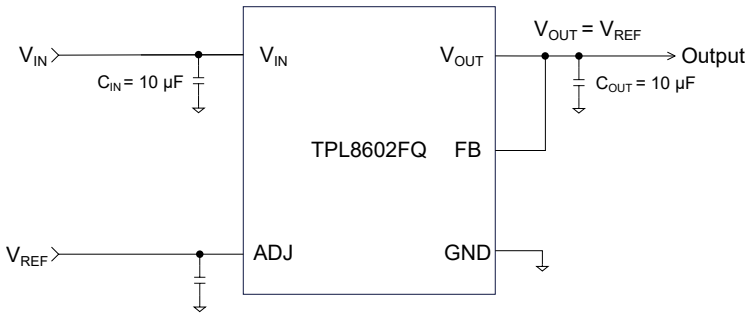

Figure 14. Typical Application Circuit

Input Capacitor and Output Capacitor

It is recommended to add a 10-µF or greater capacitor with a 0.1-µF bypass capacitor in parallel at the IN pin to keep the input voltage stable. The voltage rating of the capacitors must be greater than the maximum input voltage.

To ensure loop stability, the TPL8602FQ series requires an output capacitor of 1 µF to 100 µF with an ESR range from 0.001 Ω to 5 Ω. It is recommended to select an X7R type 10-µF ceramic capacitor with low ESR over temperature to get good transient response.

Both input capacitors and output capacitors must be placed as close to the device pins as possible.

Power Dissipation and Thermal Consideration

During normal operation, the LDO junction temperature should meet the requirement in the Recommended Operating Conditions table. Use the below equations to calculate the power dissipation and estimate the junction temperature.

The power dissipation can be calculated using Equation 1.

$$P_D = (V_{IN} - V_{OUT}) \times I_{OUT} + V_{IN} \times I_{GND} \quad (1)$$

The junction temperature can be estimated using Equation 2. θ_{JA} is the junction-to-ambient thermal resistance.

$$T_J = T_A + P_D \times \theta_{JA} \quad (2)$$

Layout

Layout Guideline

- Both input capacitors and output capacitors must be placed to the device pins as close as possible, and the vias between capacitors and device power pins must be avoided.
- It is recommended to bypass the input pin to ground with a 0.1-μF bypass capacitor. The loop area formed by the bypass capacitor connection, the IN pin, and the GND pin of the system must be as small as possible.
- It is recommended to use wide and thick copper to minimize I×R drop and heat dissipation.

Layout Example

The following figure shows a layout example of the TPL8602FQ-ES1R-S.

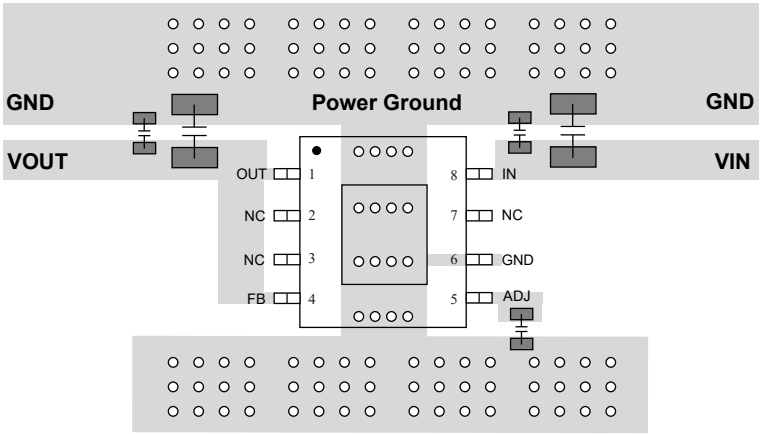

Figure 15. TPL8602FQ-ES1R-S Layout Example

Tape and Reel Information

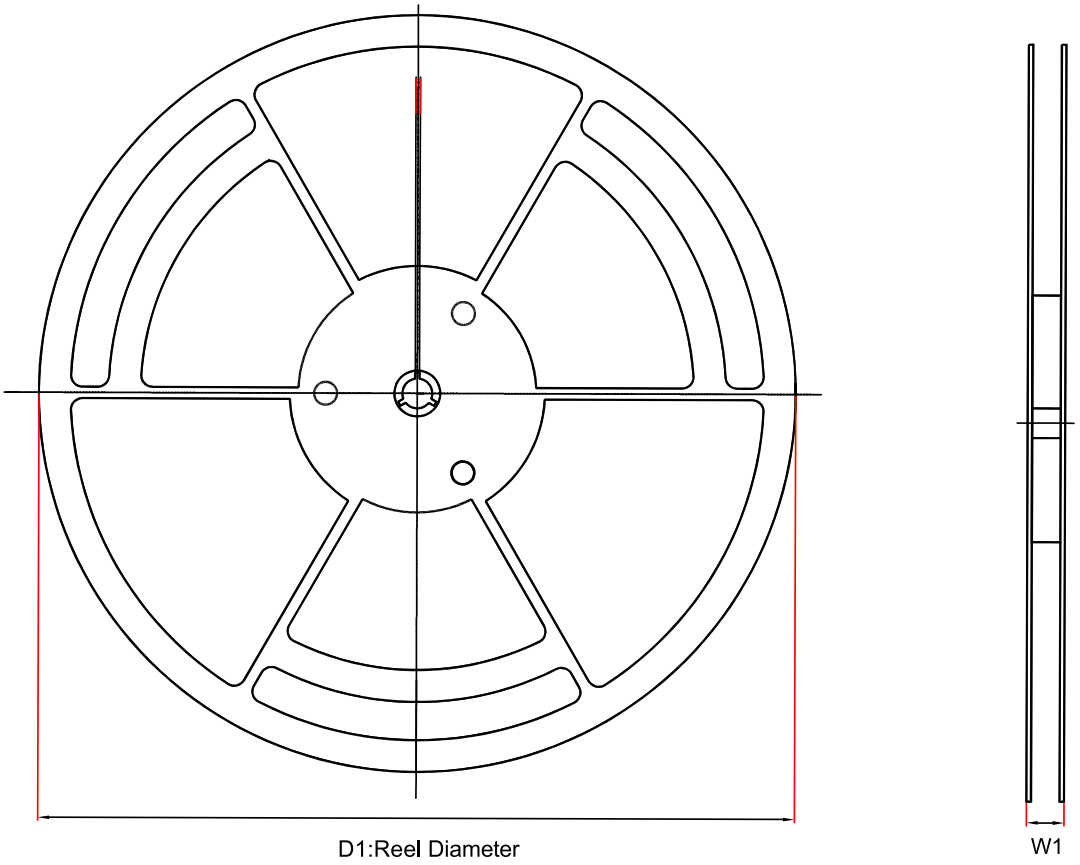

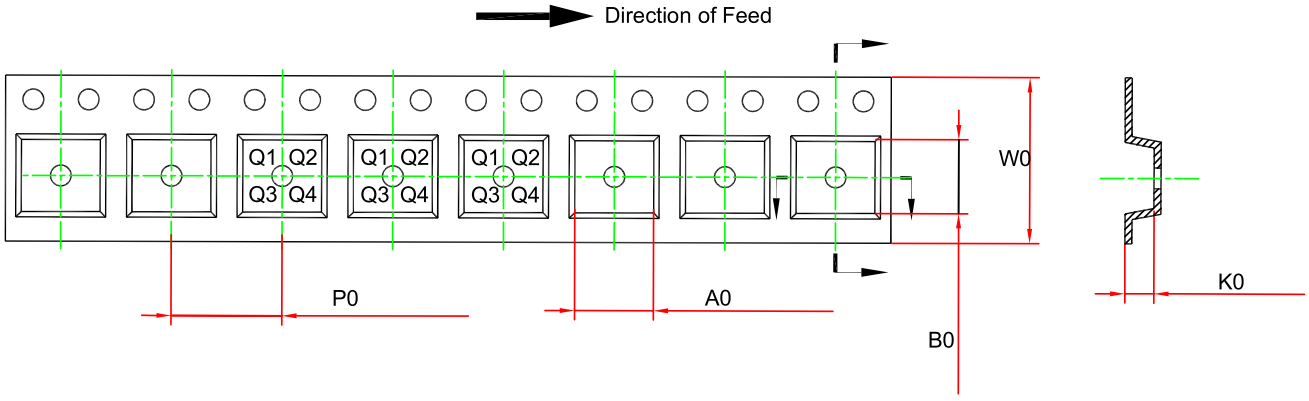

Order Number	Package	D1 (mm)	W1 (mm)	A0 (mm)	B0 (mm)	K0 (mm)	P0 (mm)	W0 (mm)	Pin1 Quadrant
TPL8602FQ-ES1R-S	ESOP8	330	17.6	6.4	5.4	2.1	8	12	Q1

Package Outline Dimensions

ESOP8

Package Outline Dimensions ES1(ESOP-8-F)

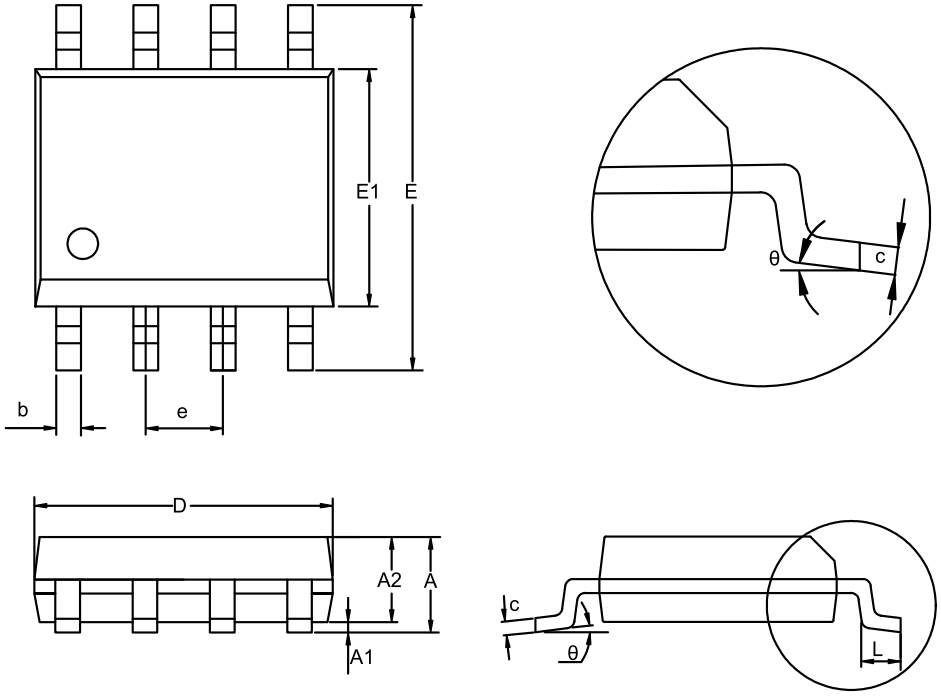

Symbol	Dimensions In Millimeters		Dimensions In Inches	
	MIN	MAX	MIN	MAX
A	1.300	1.700	0.051	0.067
A1	0.000	0.100	0.000	0.004
A2	1.350	1.550	0.053	0.061
b	0.330	0.510	0.013	0.020
c	0.170	0.250	0.007	0.010
D	4.700	5.100	0.185	0.201
D1	2.850	3.250	0.112	0.128
E	5.800	6.200	0.228	0.244
E1	3.800	4.000	0.150	0.157
E2	1.950	2.360	0.077	0.093
e	1.270 BSC		0.050 BSC	
L	0.400	1.270	0.016	0.050
θ	0	8°	0	8°

NOTES

1. Do not include mold flash or protrusion.
2. This drawing is subject to change without notice.

Order Information

Order Number	Operating Temperature Range	Package	Marking Information	MSL	Transport Media, Quantity	Eco Plan
TPL8602FQ-ES1R-S	−40 to 125°C	ESOP8	L602F	MSL2	4,000	Green

Green: 3PEAK defines "Green" to mean RoHS compatible and free of halogen substances.

IMPORTANT NOTICE AND DISCLAIMER

Copyright© 3PEAK 2012-2025. All rights reserved.

Trademarks. Any of the 思瑞浦 or 3PEAK trade names, trademarks, graphic marks, and domain names contained in this document /material are the property of 3PEAK. You may NOT reproduce, modify, publish, transmit or distribute any Trademark without the prior written consent of 3PEAK.

Performance Information. Performance tests or performance range contained in this document/material are either results of design simulation or actual tests conducted under designated testing environment. Any variation in testing environment or simulation environment, including but not limited to testing method, testing process or testing temperature, may affect actual performance of the product.

Disclaimer. 3PEAK provides technical and reliability data (including data sheets), design resources (including reference designs), application or other design recommendations, networking tools, security information and other resources "As Is". 3PEAK makes no warranty as to the absence of defects, and makes no warranties of any kind, express or implied, including without limitation, implied warranties as to merchantability, fitness for a particular purpose or non-infringement of any third-party's intellectual property rights. Unless otherwise specified in writing, products supplied by 3PEAK are not designed to be used in any life-threatening scenarios, including critical medical applications, automotive safety-critical systems, aviation, aerospace, or any situations where failure could result in bodily harm, loss of life, or significant property damage. 3PEAK disclaims all liability for any such unauthorized use.

This page intentionally left blank

ENTEGRECİ

Bu belge www.entegreci.com üzerinden sunulmaktadır.

Elektronik komponent tedarikinde Entegreci

Entegreci, Eskişehir merkezli, Türkiye geneline satış yapan bir elektronik komponent mağazasıdır. Entegreler (IC), mikrodenetleyiciler, transistörler, diyotlar, pasif elemanlar, konnektörler, modüller ve geliştirme kartları tek adetten seri üretim adetlerine kadar satılır. Ürün sayfalarında güncel stok durumunu, fiyatı ve datasheet bağlantısını bulabilirsiniz.

Parça koduyla arama

Üretici parça numarasını yazın; stok ve fiyatı hemen görün.

www.entegreci.com

Ürün kategorileri

Entegreden kapasitöre tüm elektronik komponent kategorileri.

Kategorilere göz atın

Üreticiler

Aradığınız üreticinin ürünlerini tek sayfada inceleyin.

Üreticileri görün

Toplu alım ve teklif

Listede olmayan ya da yüksek adetli parçalar için teklif isteyin.

Teklif isteyin

www.entegreci.com | **destek@entegreci.com** | **0850 305 90 34**

Entegreci is an online electronic components store based in Türkiye. Search by manufacturer part number to see stock, prices and datasheets for integrated circuits, microcontrollers, transistors, passive components and connectors, or request a quote for parts that are not listed.

Bu sayfa Entegreci tarafından eklenmiştir. Belgenin önceki sayfaları asıl yayıncısına aittir ve içeriği değiştirilmemiştir; en güncel sürüm için belgenin yayıncısına başvurun.