42-V/50-mA High-Precision Voltage-Tracking Low-Dropout Linear Regulator

Features

- Qualified for Automotive Applications
  - AEC-Q100 Grade 1, T_A: −40°C to +125°C
  - Junction Temperature, T_J: −40°C to +150°C
- Wide Input Voltage Range:
  - −20 V to 45 V Maximum Rating
  - 4 V to 42 V Operating Voltage Range
- Adjustable Output Voltage:
  - 1.5 V to 18 V
- Excellent Output Tracking Tolerance: ±4 mV
- Maximum 50 mA Output Current Capability
- Low Dropout Voltage: 125 mV typical at 10 mA
- Integrated Full Protection:
  - Input Reverse Polarity Protection
  - Output Short-Circuit to Ground Protection
  - Output Short-Circuit to Battery Protection
  - Inductive Clamp at OUT Pin
  - Over-Current Protection
  - Over-Temperature Protection
- Package Options:
  - SOT23-5

Applications

- Automotive Off-Board Sensor Power Supply
- Automotive Body Control, HVAC
- Automotive Infotainment, Navigation, Telematics
- Automotive ADAS, Surround-View Cameras
- Automotive Power Train, Transmission

Description

The TPL8650Q is a series of low-dropout linear regulators with 50-mA maximum output current capability. The TPL8650Q series supports operating voltage range from 4 V to 42 V (−20 V to 45-V maximum operating voltage range).

The TPL8650Q supports an output capacitor range from 1 μF to 50 μF with an ESR range from 0.001 Ω to 5 Ω.

The TPL8650Q integrates full protection with input reverse polarity protection, output short-circuits to ground protection, output short-circuits to battery protection, inductive clamp at the out pin, over-current protection, and over-temperature protection.

With all the above features, the TPL8650Q series is especially suitable for the off-board power supply through a long cable away from the main board in different automotive and industrial systems.

The TPL8650Q series is guaranteed to operate with ambient temperature range from −40°C to +125°C.

Typical Application Circuit

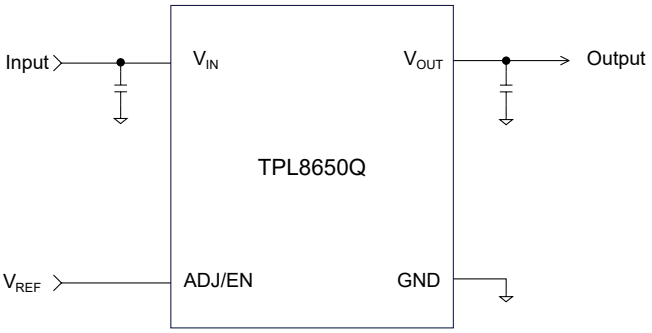

Table of Contents

Features 1
Applications 1
Description 1
Typical Application Circuit 1
Product Family Table 3
Revision History 3
Pin Configuration and Functions 4
Specifications 5
Absolute Maximum Ratings 5
ESD, Electrostatic Discharge Protection 5
Recommended Operating Conditions 5
Thermal Information 5
Electrical Characteristics 6
Typical Performance Characteristics 8
Detailed Description 10
Overview 10
Functional Block Diagram 10
Feature Description 10
Application and Implementation 12
Application Information 12
Typical Application 12
Layout 13
Layout Guideline 13
Tape and Reel Information 14
Package Outline Dimensions 15
SOT23-5 15
Order Information 16
IMPORTANT NOTICE AND DISCLAIMER 17

Product Family Table

Order Number	Output Voltage (V)	Package
TPL8650Q-S5TR-S	1.5 V to 18 V	SOT23-5

Revision History

Date	Revision	Notes
2025-09-25	Rev.A.0	Released version

Pin Configuration and Functions

TPL8650Q
SOT23-5 Package
Top View

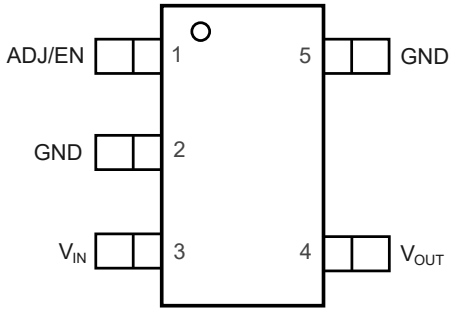

Table 1. Pin Functions: TPL8650Q

Name	Pin No.	I/O	Description
ADJ/EN	1	I	This pin connects to the reference voltage. A low signal disables the IC and a high signal enables the IC. Connected the voltage reference directly or with a voltage divider for lower output voltages. To compensate for line influences, It's recommended to place a capacitor close to the pin.
GND	2, 5	–	Ground reference pin.
V_{IN}	3	I	Input voltage pin.
V_{OUT}	4	O	Output voltage pin.

Specifications

Absolute Maximum Ratings

Parameter		Min	Max	Unit
IN		−20	45	V
ADJ/EN		−0.3	22	V
OUT		−1	22	V
ADJ − OUT	ADJ and Output Voltage Difference		7	V
T_J	Junction Temperature Range	−40	150	°C
T_{STG}	Storage Temperature Range	−65	150	°C
T_L	Lead Temperature (Soldering 10 sec)		260	°C

(1) Stresses beyond those listed under Absolute Maximum Ratings may cause permanent damage to the device. Exposure to any Absolute Maximum Rating condition for extended periods may affect device reliability and lifetime.
(2) All voltage values are with respect to GND.
(3) Not subject to production test, specified by design.

ESD, Electrostatic Discharge Protection

Symbol	Parameter	Condition	Minimum Level	Unit
HBM	Human Body Model ESD	AEC Q100-002	±2	kV
CDM	Charged Device Model ESD	AEC Q100-011	±1	kV

Recommended Operating Conditions

Parameter		Min	Max	Unit
IN		4	42	V
ADJ/EN		1.5	18	V
OUT		1.5	18	V
C_{OUT}	Output Capacitor Requirements	1	50	μF
ESR	Output Capacitor ESR Requirements	0.001	5	Ω
T_A	Ambient Temperature Range	−40	125	°C
T_J	Junction Temperature Range	−40	150	°C

Thermal Information

Package Type	θ_{JA}	$\theta_{JC,top}$	Unit
SOT23-5	172	81	°C/W

Electrical Characteristics

All test conditions: V_{IN} = 13.5 V, 1.5 V ≤ $V_{ADJ/EN}$ ≤ 18 V; C_{IN} = C_{OUT} = 1 μF, I_{OUT} = 0.1 mA. T_A = −40°C to +125°C, unless otherwise noted.

Symbol	Parameter	Conditions	Min	Typ	Max	Unit
Supply Input Voltage and Current						
V_{IN}	Input Supply Voltage Range (1)		$V_{IN, MIN}$		42	V
UVLO	V_{IN} Under-Voltage Lockout Threshold	V_{IN} rising, V_{EN} = 2 V, I_{OUT} = 0.1 mA			4	V
	Hysteresis			200		mV
I_{SD}	Shutdown Current	ADJ/EN = 0.8 V		5	12	μA
I_Q	Quiescent Current	ADJ/EN = 5 V, I_{OUT} = 0.5 mA		55	90	μA
		ADJ/EN = 5 V, I_{OUT} = 30 mA		180	260	μA
EN Voltage and Current						
EN/ADJ, high	Adjust and Enable High Signal Valid	I_{OUT} = 0.5 mA, the difference between V_{OUT} and ADJ/EN is smaller than 5 mV	1.5		18	V
EN/ADJ, low	Adjust and Enable Low Signal Valid	I_{OUT} = 0.5 mA, V_{OUT} = 0	0		0.8	V
$I_{EN/ADJ}$	Adjust-input and Enable-input Current	ADJ/EN = 5 V			1	μA
Output Voltage and Current						
V_{OUT}	Output Voltage Tracking Tolerance	V_{IN} = 4 V to 42 V, 1.5 V ≤ $V_{ADJ/EN}$ ≤ V_{IN} − 0.3 V, I_{OUT} = 0.1 mA to 1 mA	−4		4	mV
		V_{IN} = 4 V to 42 V, 1.5 V ≤ $V_{ADJ/EN}$ ≤ V_{IN} − 1.5 V, I_{OUT} = 1 mA to 50 mA	−4		4	mV
ΔV_{OUT}	Line Regulation	V_{IN} = 6 V to 42 V, $V_{ADJ/EN}$ = 5 V, I_{OUT} = 10 mA	−4		4	mV
	Load Regulation	$V_{ADJ/EN}$ = 5 V, I_{OUT} = 1 mA to 50 mA	−4		4	mV
V_{DO}	Dropout Voltage (2)	I_{OUT} = 10 mA, $V_{ADJ/EN}$ = 5 V		125	220	mV
		I_{OUT} = 50 mA, $V_{ADJ/EN}$ = 5 V		635	1000	mV
I_{OUT}	Output Current Range	V_{OUT} in regulation	0		50	mA
I_{CL}	Output Current Limit	V_{ADJ} = 5 V, V_{OUT} = V_{ADJ} − 0.1V	60		200	mA
I_{REV}	Output Reverse Current	V_{IN} = 0 V, $V_{ADJ/EN}$ = 5 V, force 20 V to OUT	−5			μA
	Input Reverse Polarity Current	V_{IN} = −20 V, $V_{ADJ/EN}$ = 5 V, V_{OUT} = 0 V	−5			μA
t_{SU}	Start-Up Time (3)			200		μs

Symbol	Parameter	Conditions	Min	Typ	Max	Unit
PSRR and Output Noise						
PSRR	Power Supply Rejection Ratio (3)	$V_{ADJ/EN}$ = 5 V, I_{OUT} = 10 mA, f = 100 Hz		80		dB
		$V_{ADJ/EN}$ = 5 V, I_{OUT} = 10 mA, f = 1 kHz		65		dB
		$V_{ADJ/EN}$ = 5 V, I_{OUT} = 10 mA, f = 100 kHz		55		dB
V_N	Output RMS Noise (3)	$V_{ADJ/EN}$ = 5 V, I_{OUT} = 10 mA, 10 Hz to 100 kHz		25		μV_{RMS}
Temperature Range						
T_{SD}	Thermal Shutdown Threshold (3)			170		°C
	Thermal Shutdown Hysteresis (3)			15		°C

(1) $V_{IN,MIN}$ = 4 V or $V_{OUT, NOM}$ + $V_{DO, MAX}$, whichever is greater.

(2) Dropout voltage is the minimum input-to-output voltage differential needed to maintain regulation at a specified output current. Dropout voltage is measured when the output voltage has dropped 100 mV from the nominal value. In dropout, the output voltage will be equal to (V_{IN} – V_{DO}).

(3) Not tested during production, guaranteed by design.

Typical Performance Characteristics

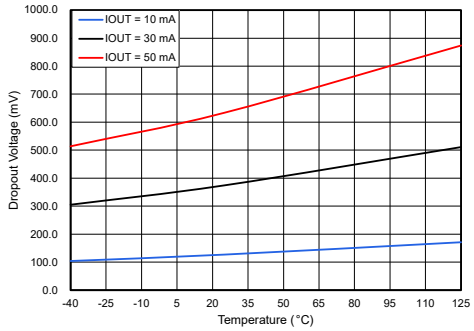

V_{IN} = V_{ADJ} = 4 V

Figure 1. Dropout Voltage vs. Temperature

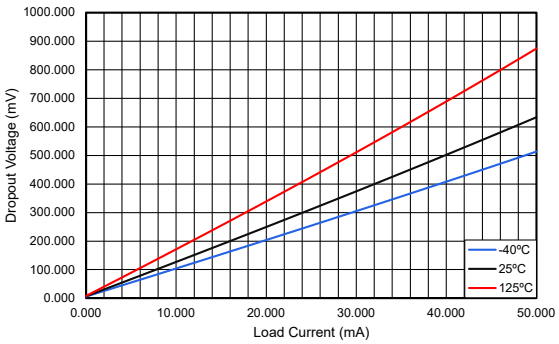

V_{IN} = V_{ADJ} = 4 V

Figure 2. Dropout Voltage vs. Output Current

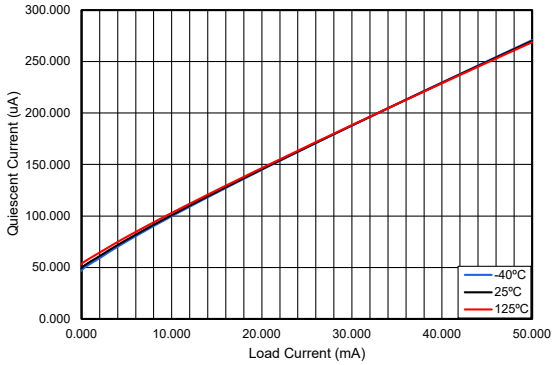

V_{IN} = 13.5 V , V_{ADJ} = 5 V

Figure 3. Ground Current vs. Output Current

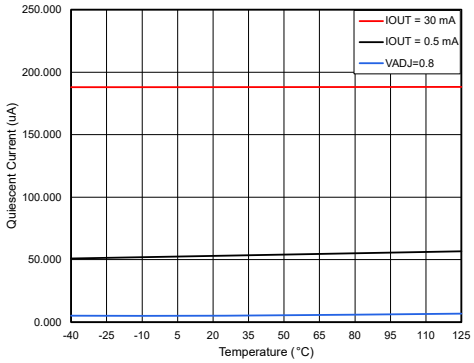

V_{IN} = 13.5 V, V_{ADJ} = 5 V

Figure 4. Ground Current vs. Temperature

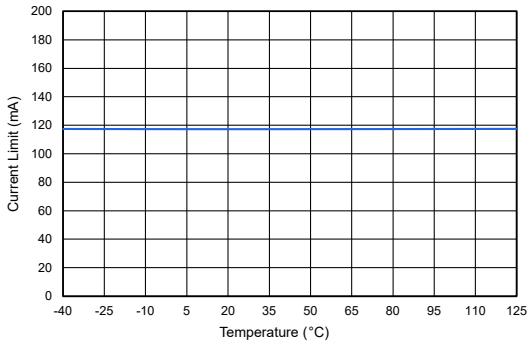

V_{IN} = 13.5 V , V_{ADJ} = 5 V

Figure 5. Current-limit vs. Temperature

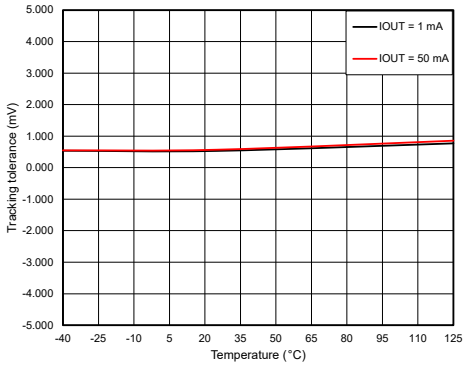

V_{IN} = 13.5 V , V_{ADJ} = 5 V , I_O = 1 mA , 50 mA

Figure 6. Tracking Error vs. Temperature

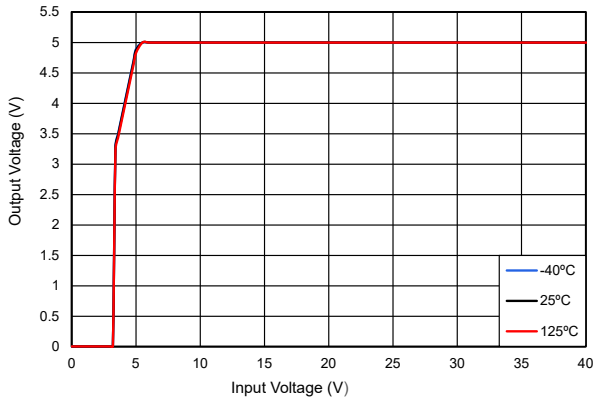

V_{ADJ} = 5 V

Figure 7. Output Voltage vs. Input Voltage

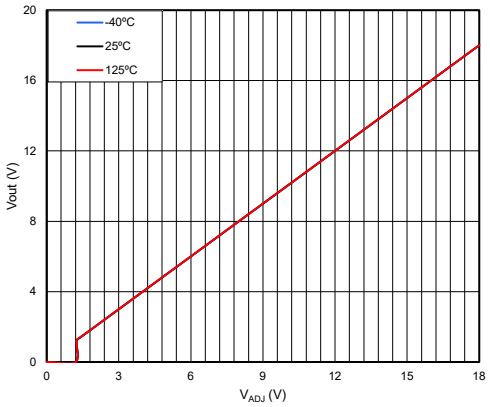

V_{IN} = 13.5 V

Figure 8. Output Voltage vs. Reference Voltage

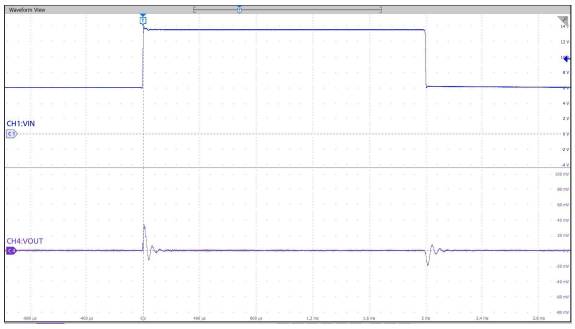

V_{IN} = 9 V to 13.5V , 10-µF ceramic C_{OUT}, I_O = 50 mA

Figure 9. Line Transient

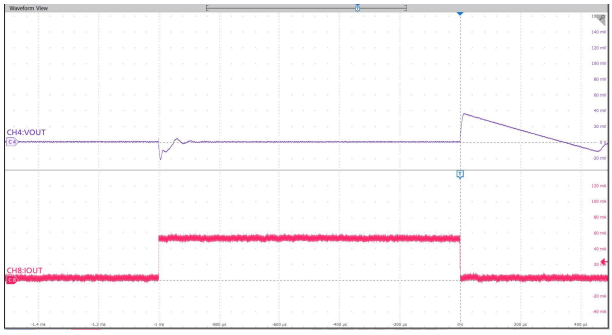

V_{IN} = 13.5V , 10-µF ceramic C_{OUT}, I_O = 1 mA to 50 mA

Figure 10. Load Transient

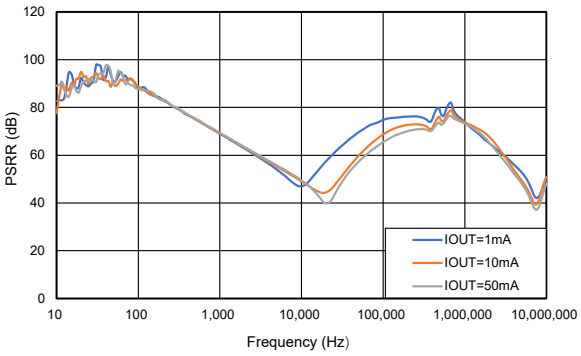

V_{IN} = 13.5 V, C_O = 10 µF , V_{ADJ} = 5 V

Figure 11. Power-Supply Rejection Ratio vs. Frequency

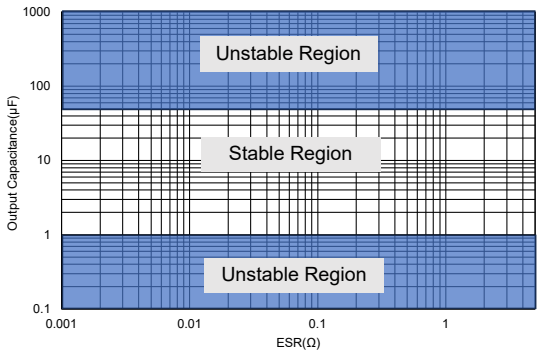

Figure 12. Load Capacitance vs. ESR Stability

Detailed Description

Overview

The TPL8650Q is a series of low-dropout linear regulators with 50-mA maximum output current capability. The TPL8650Q series supports operating voltage range from 4 V to 42 V (−20 V to 45-V maximum operating voltage range).

The TPL8650Q supports an output capacitor range from 1 μF to 50 μF with an ESR range from 0.001 Ω to 5 Ω.

The TPL8650Q integrates full protection with input reverse polarity protection, output short-circuits to ground protection, output short-circuits to battery protection, inductive clamp at the out pin, over-current protection, and over-temperature protection.

With all the above features, the TPL8650Q series is especially suitable for the off-board power supply through a long cable away from the main board in different automotive and industrial systems.

Functional Block Diagram

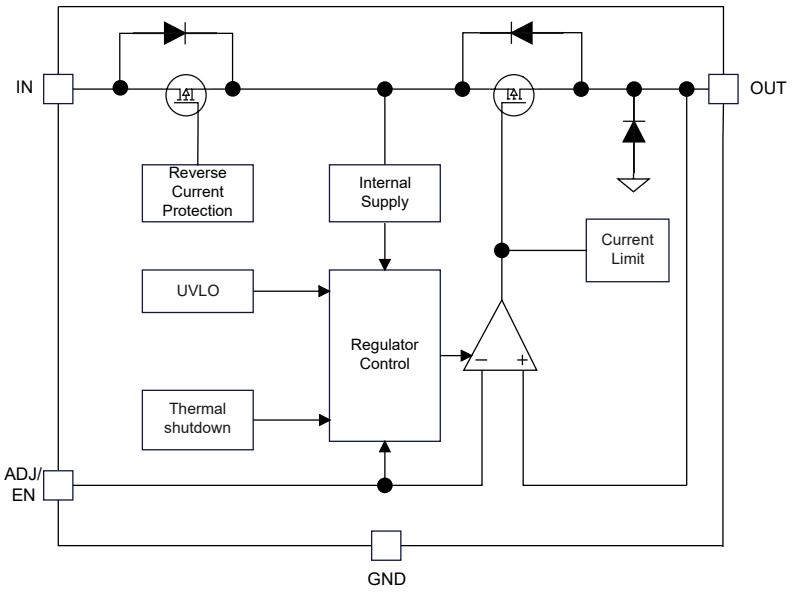

Figure 13. Functional Block Diagram

Feature Description

Enable (EN)

The enable pin (EN) is active high. Connect this pin to the GPIO of an external processor or digital logic control circuit to enable and disable the device. Or connect this pin to the IN pin for self-bias applications.

Under-Voltage Lockout (UVLO)

The TPL8650Q series uses an under-voltage lockout circuit to keep the output shut off until the internal circuitry operates properly. Refer to the Electrical Characteristics table for UVLO threshold and hysteresis.

Output Short-Circuit to Battery Protection and Input Reverse Polarity Protection

The device can withstand a short to the battery. No damage to the device occurs when the out pin of the TPL8650Q device is shorted to the battery.

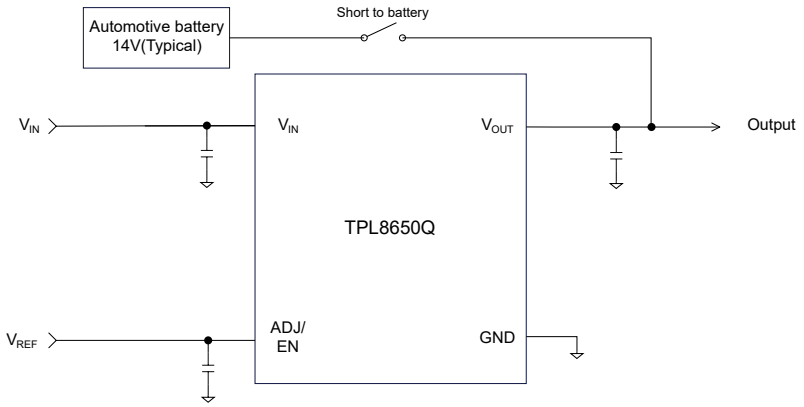

Figure 14. OUT Short to Battery

Output Inductive Clamp Protection

The cable inductance continues to source current from the output of the device when the output is turned off. The device integrates an inductive clamp at the output to help dissipate the inductive energy stored in the cable. The device integrates an internal diode between the output and ground pins.

Output Short-Circuit to Ground and Over-Current Protection

The TPL8650Q series integrates an internal current limit that helps to protect the regulator during fault conditions, e.g., the output is shorted to ground, or the output is forced below $V_{OUT\ (NOM)}$. The output voltage is not regulated when the device is in current limit and $V_{OUT} = I_{CL} \times R_{LOAD}$.

Over-Temperature Protection

The over-temperature protection starts to work when the junction temperature exceeds the thermal shutdown (T_{SD}) threshold, which turns off the regulator immediately. When the device cools down and the junction temperature falls below the thermal shutdown threshold minus thermal shutdown hysteresis, the regulator turns on again.

The junction temperature range should be limited according to the Recommended Operating Conditions table, continuously operating above the junction temperature range reduces the device lifetime.

Application and Implementation

> Note
>
> Information in the following application sections is not part of the 3PEAK's component specification and 3PEAK does not warrant its accuracy or completeness. 3PEAK's customers are responsible for determining suitability of components for their purposes. Customers should validate and test their design implementation to confirm system functionality.

Application Information

The TPL8650Q products are 42-V high-precision voltage-tracking low-dropout voltage linear regulators with 50-mA maximum output current capability. The following application schematic shows a typical usage of the TPL8650Q series.

Typical Application

Figure 15 shows the typical application schematic of the TPL8650Q series.

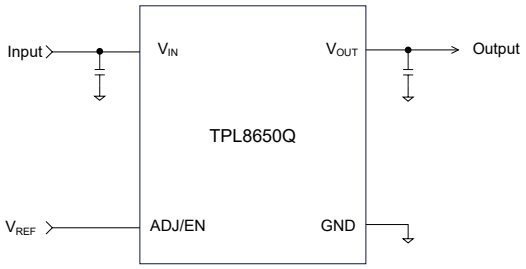

Figure 15. Typical Application Circuit

Input Capacitor and Output Capacitor

The device requires an input decoupling capacitor, the value of which depends on the application. It is recommended to add a 1 μF or greater capacitor with a 0.1 μF bypass capacitor in parallel at the IN pin to keep the input voltage stable. The voltage rating of the capacitors must be greater than the maximum input voltage.

To ensure loop stability, the TPL8650Q series requires an output capacitor of 1 μF to 50 μF with an ESR range from 0.001 Ω to 5 Ω. It is recommended to select an X7R type 2.2-μF ceramic capacitor with low ESR over temperature to get a good transient response.

Both input capacitors and output capacitors must be placed as close to the device pins as possible.

Power Dissipation and Thermal Consideration

During normal operation, LDO junction temperature should meet the requirement in the Recommended Operating Conditions table. Using the below equations to calculate the power dissipation and estimate the junction temperature.

The power dissipation can be calculated using the Equation 1.

$$P_D = (V_{IN} - V_{OUT}) \times I_{OUT} + V_{IN} \times I_{GND} \quad (1)$$

The junction temperature can be estimated using the Equation 2. θ_{JA} is the junction-to-ambient thermal resistance.

$$T_J = T_A + P_D \times \theta_{JA} \quad (2)$$

Layout

Layout Guideline

- Both input capacitors and output capacitors must be placed to the device pins as close as possible, and the vias between capacitors and device power pins must be avoided.
- It is recommended to bypass the input pin to ground with a 0.1-μF bypass capacitor. The loop area formed by the bypass capacitor connection, the IN pin, and the GND pin of the system must be as small as possible.
- It is recommended to use wide and thick copper to minimize I×R drop and heat dissipation.

Tape and Reel Information

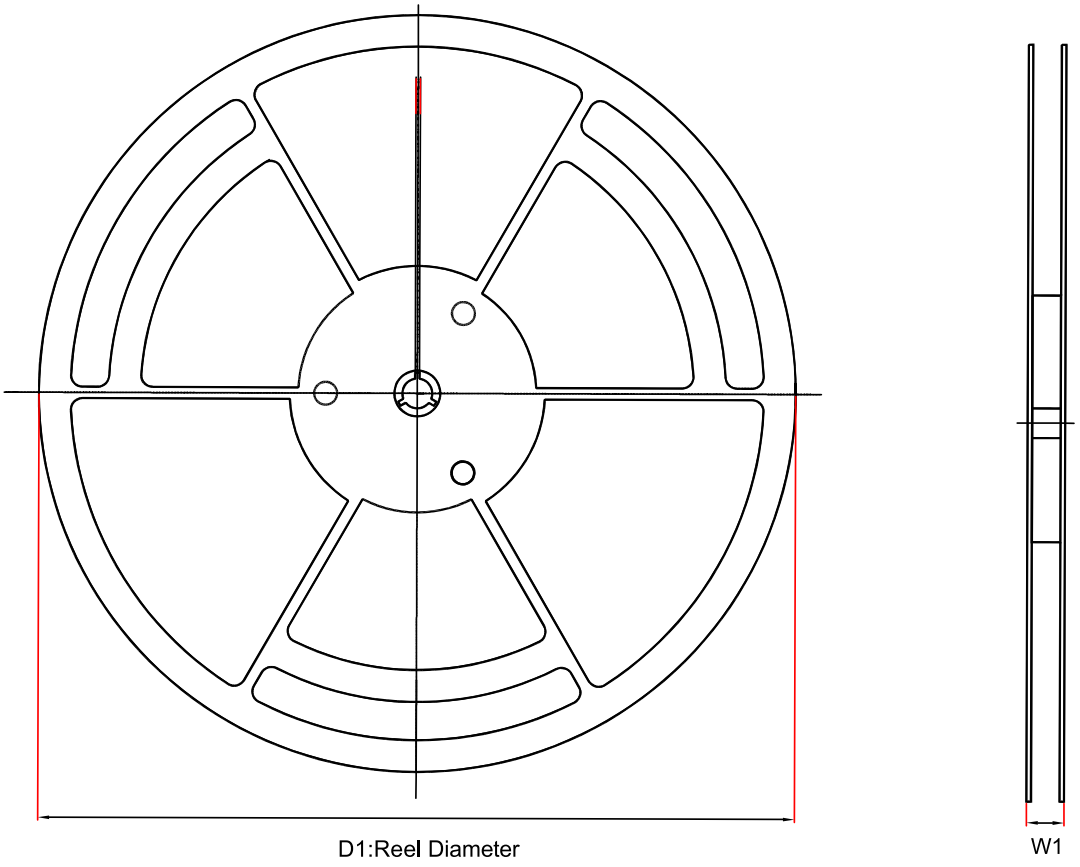

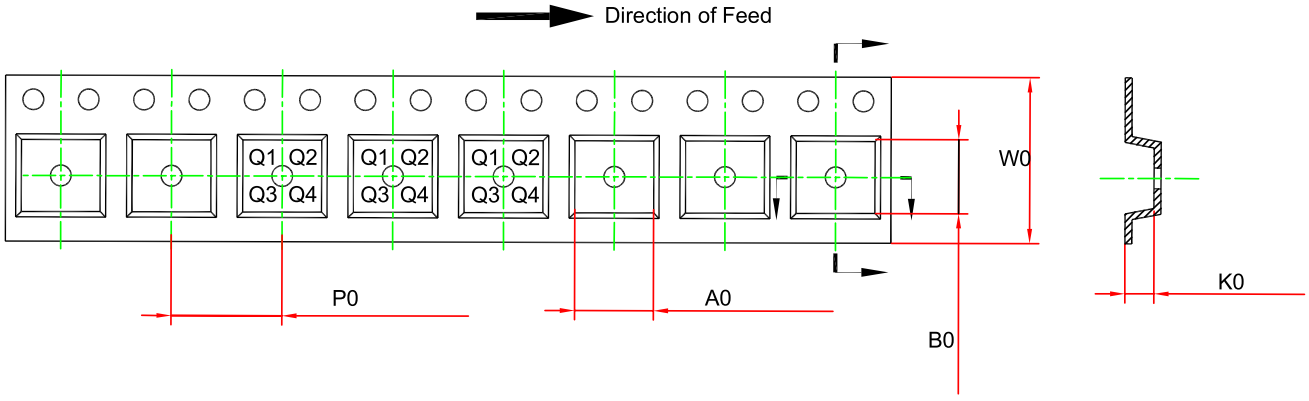

Order Number	Package	D1 (mm)	W1 (mm)	A0 (mm)	B0 (mm)	K0 (mm)	P0 (mm)	W0 (mm)	Pin1 Quadrant
TPL8650Q-S5TR-S	SOT23-5	180	12	3.3	3.25	1.4	4	8	Q3

Package Outline Dimensions

SOT23-5

Package Outline Dimensions S5T(SOT23-5-A)

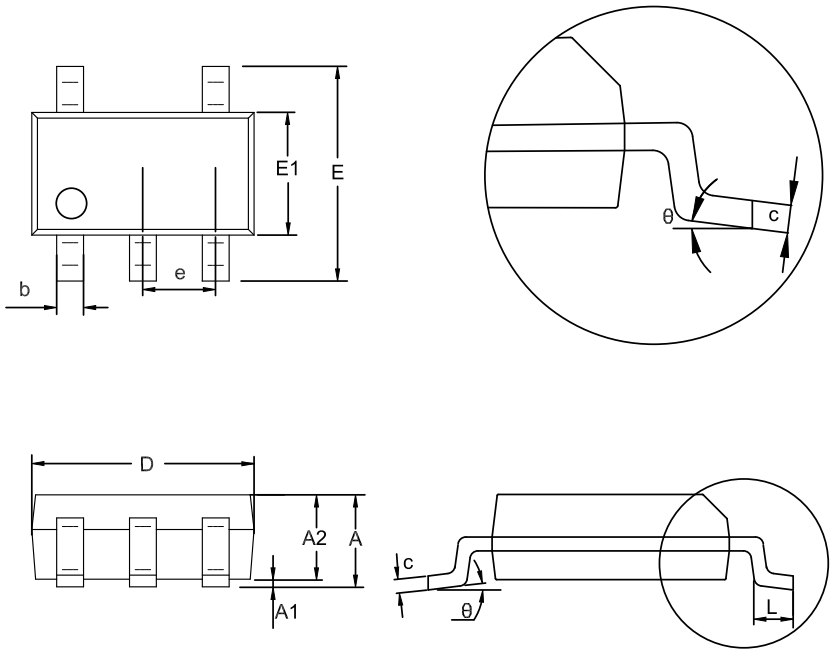

Symbol	Dimensions In Millimeters		Dimensions In Inches	
	MIN	MAX	MIN	MAX
A	1.050	1.250	0.041	0.049
A1	0.000	0.150	0.000	0.006
A2	1.000	1.200	0.039	0.047
b	0.280	0.500	0.011	0.020
c	0.100	0.230	0.004	0.009
D	2.820	3.020	0.111	0.119
E	2.600	3.000	0.102	0.118
E1	1.500	1.720	0.059	0.068
e	0.950 BSC		0.037 BSC	
L	0.300	0.600	0.012	0.024
θ	0	8°	0	8°

NOTES

1. Do not include mold flash or protrusion.
2. This drawing is subject to change without notice.

Order Information

Order Number	Operating Temperature Range	Package	Marking Information	MSL	Transport Media, Quantity	Eco Plan
TPL8650Q-S5TR-S	−40 to 150°C	SOT23-5	L65	MSL3	3,000	Green

Green: 3PEAK defines "Green" to mean RoHS compatible and free of halogen substances.

IMPORTANT NOTICE AND DISCLAIMER

Copyright© 3PEAK 2012-2025. All rights reserved.

Trademarks. Any of the 思瑞浦 or 3PEAK trade names, trademarks, graphic marks, and domain names contained in this document /material are the property of 3PEAK. You may NOT reproduce, modify, publish, transmit or distribute any Trademark without the prior written consent of 3PEAK.

Performance Information. Performance tests or performance range contained in this document/material are either results of design simulation or actual tests conducted under designated testing environment. Any variation in testing environment or simulation environment, including but not limited to testing method, testing process or testing temperature, may affect actual performance of the product.

Disclaimer. 3PEAK provides technical and reliability data (including data sheets), design resources (including reference designs), application or other design recommendations, networking tools, security information and other resources "As Is". 3PEAK makes no warranty as to the absence of defects, and makes no warranties of any kind, express or implied, including without limitation, implied warranties as to merchantability, fitness for a particular purpose or non-infringement of any third-party's intellectual property rights. Unless otherwise specified in writing, products supplied by 3PEAK are not designed to be used in any life-threatening scenarios, including critical medical applications, automotive safety-critical systems, aviation, aerospace, or any situations where failure could result in bodily harm, loss of life, or significant property damage. 3PEAK disclaims all liability for any such unauthorized use.

This page intentionally left blank

ENTEGRECİ

Bu belge www.entegreci.com üzerinden sunulmaktadır.

Elektronik komponent tedarikinde Entegreci

Entegreci, Eskişehir merkezli, Türkiye geneline satış yapan bir elektronik komponent mağazasıdır. Entegreler (IC), mikrodenetleyiciler, transistörler, diyotlar, pasif elemanlar, konnektörler, modüller ve geliştirme kartları tek adetten seri üretim adetlerine kadar satılır. Ürün sayfalarında güncel stok durumunu, fiyatı ve datasheet bağlantısını bulabilirsiniz.

Parça koduyla arama

Üretici parça numarasını yazın; stok ve fiyatı hemen görün.

www.entegreci.com

Ürün kategorileri

Entegreden kapasitöre tüm elektronik komponent kategorileri.

Kategorilere göz atın

Üreticiler

Aradığınız üreticinin ürünlerini tek sayfada inceleyin.

Üreticileri görün

Toplu alım ve teklif

Listede olmayan ya da yüksek adetli parçalar için teklif isteyin.

Teklif isteyin

www.entegreci.com | **destek@entegreci.com** | **0850 305 90 34**

Entegreci is an online electronic components store based in Türkiye. Search by manufacturer part number to see stock, prices and datasheets for integrated circuits, microcontrollers, transistors, passive components and connectors, or request a quote for parts that are not listed.

Bu sayfa Entegreci tarafından eklenmiştir. Belgenin önceki sayfaları asıl yayıncısına aittir ve içeriği değiştirilmemiştir; en güncel sürüm için belgenin yayıncısına başvurun.