Low Noise CMOS Voltage Regulators

Features

- Low Quiescent Current: 50μA
- Low Output Noise: 40μVRMS(10Hz~100kHz)
- Operating Voltage Range: 1.8V ~ 6.0V
- Low Dropout Voltage: 50mV@100mA
- High Accuracy: ±2%(Typ.)
- Output Voltage:1.05~ 5.0V
- TTL-Logic-Controlled Shutdown Input
- Excellent Line and Load Transient Response
- Built-in Current Limiter, Short-Circuit Protection
- Moisture Sensitivity Level 1
- Epoxy Meets UL 94 V-0 Flammability Rating
- Halogen Free Available Upon Request By Adding Suffix "-HF"
- Lead Free Finish/RoHS Compliant ("P" Suffix designates RoHS Compliant. See ordering information)

Applications

- Cellular and Smart Phones
- Radio control systems
- Laptop, Palmtops and PDAs
- Digital Still and Video Cameras
- MP3, MP4 Player
- Battery-Powered Equipment

Description

The MC6225K3 series are a group of positive voltage regulators manufactured by CMOS technologies with high ripple rejection, ultra-low noise, low power consumption and low dropout voltage, which can prolong battery life in portable electronics. The MC6225K3 series work with low-ESR ceramic capacitors, reducing the amount of board space necessary for power applications. The MC6225K3 series consume less than 0.1μA in shutdown mode and have fast turn-on time less than 50μS.The series are very suitable for the battery-powered equipments, such as RF applications and other systems requiring a quiet voltage source.

MCC Part Number	Device Marking
MC6225K3-1.2	ACdXX(1)
MC6225K3-1.8	ACjXX(1)
MC6225K3-2.5	ACqXX(1)
MC6225K3-3.3	ACyXX(1)

Note:
1. "XX" indicate DateCode.

SOT-23-3L

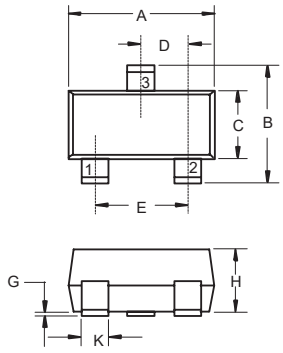

DIM	INCHES		MM		NOTE
	MIN	MAX	MIN	MAX	
A	0.113	0.117	2.87	2.97	
B	0.108	0.112	2.75	2.85	
C	0.061	0.065	1.55	1.65	
D	0.036	0.038	0.914	0.965	
E	0.073	0.077	1.85	1.95	
G	0.0016	0.0039	0.04	0.100	
H	0.041	0.045	1.05	1.15	
J	0.006	0.007	0.14	0.17	
K	0.012	0.020	0.30	0.50	

Suggested Solder Pad Layout

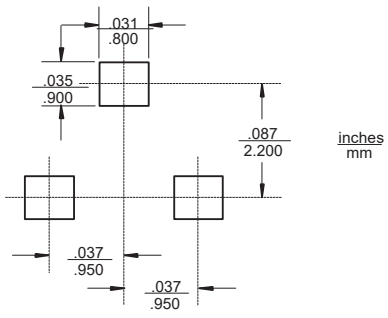

Pin Configuration and Functions (Top View)

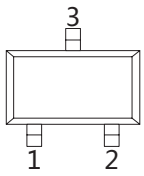

Number	Name	Function
1	V_{ss}	Ground
2	V_{out}	Output Pin
3	V_{in}	Power Input Pin

Typical Application Circuit

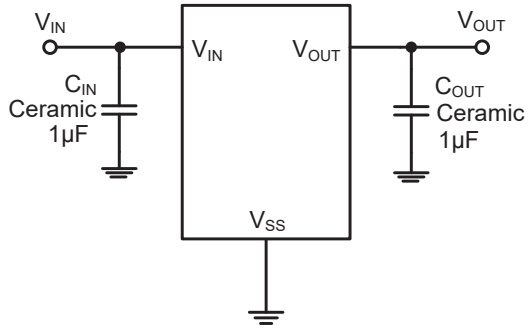

Absolute Maximum Ratings

- Operating Free Air Temperature Range: -40~+85°C
- Operating Junction Temperature Range: -40~+125°C
- Storage Temperature Range: -40~+125°C
- Thermal Resistance: 400°C/W Junction to Ambient

Parameter	Symbol	Ratings	Units
Input Voltage	V_{IN}	V_{SS}-0.3 ~ V_{SS}+7	V
Output Voltage	V_{OUT}	V_{SS}-0.3 ~ V_{IN}+0.3	V
Output Current	I_{OUT}	500	mA
Power Dissipation	P_D	0.38	W

Electrical Characteristics(V_{IN}=V_{OUT}+1V, C_{IN}=C_{OUT}=1μF, T_A=25℃, unless otherwise specified)

Parameter		Symbol	Conditions	Min.	Typ.	Max.	Units
Output Voltage		$V_{OUT(E)}$ (2)	I_{OUT}=1mA	Vout*0.98	Vout	Vout*1.02	V
Supply Current		I_{SS}	I_{OUT}=0		50	100	μA
Standby Current		I_{STBY}	CE = V_{SS}		0.1	1	μA
Output Current		I_{OUT}	—	500			mA
Dropout Voltage		Vdif(3)	I_{OUT} =100mA V_{OUT}≥3.3V		50		mV
Load Regulation		ΔV_{OUT}	V_{IN}= V_{OUT} +1V, 1mA≤I_{OUT}≤100mA		1		mV
Line Regulation			I_{OUT} =10mA V_{OUT} +1V≤V_{IN}≤6V		0.01	0.2	%/V
Output Voltage Temperature Characteristics			I_{OUT} =10mA -40≤T≤+85		50		ppm
Short Current		I_{Short}	V_{OUT} =V_{SS}		50		mA
Input Voltage		V_{IN}	—	1.8		6.0	V
Power Supply Rejection Rate	100Hz	PSRR	I_{OUT}=50mA		75		dB
	1kHz				80		
	10kHz				80		
CE "High" Voltage		$V_{CE"H"}$		1.5		V_{IN}	V
CE "Low" Voltage		$V_{CE"L"}$				0.3	V
C_{OUT} Auto-Discharge Resistance		$R_{DISCHRG}$	V_{IN}=5V,V_{OUT}=3.0V, V_{CE}=V_{SS}		60		Ω

Note:

2. $V_{OUT(E)}$: Effective Output Voltage (Ie. The output voltage when V_{IN} = (V_{OUT} +1.0V) and maintain a certain I_{OUT} Value).
3. Vdif : The Difference Of Output Voltage And Input Voltage When Input Voltage Is Decreased Gradually Till Output Voltage Equals To 98% Of $V_{OUT(E)}$.

Curve Characteristics

Fig. 1 - Output Voltage vs Input Voltage

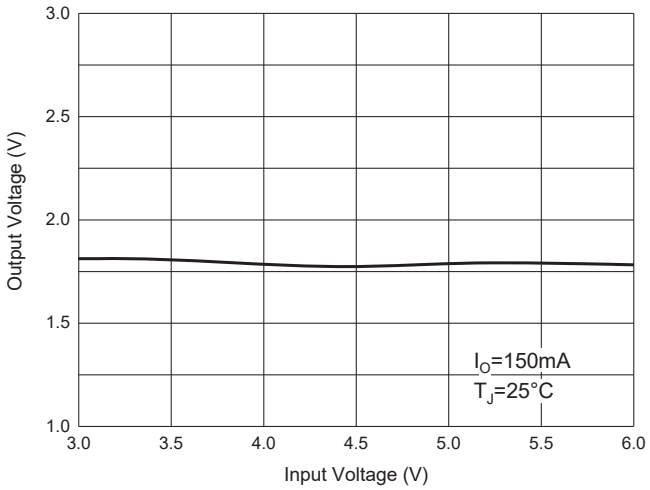

Fig. 2 - Output Voltage vs Temperature

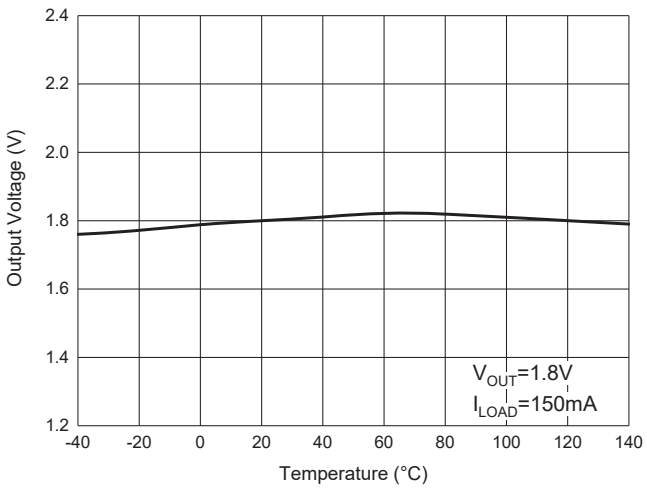

Fig. 3 - Quiescent Current

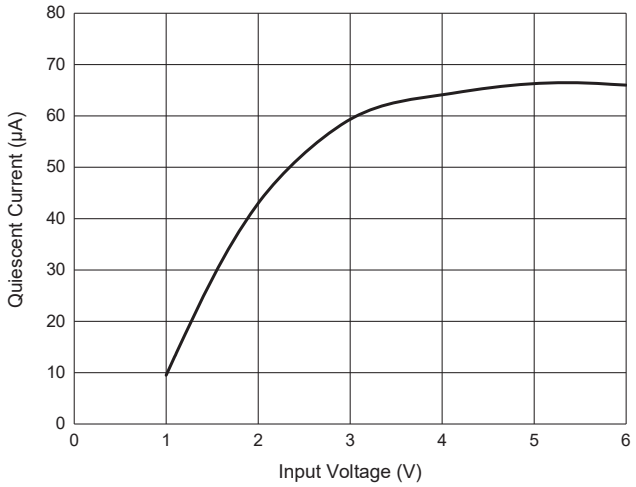

Fig. 4 - Current Cut-off Grid Voltage

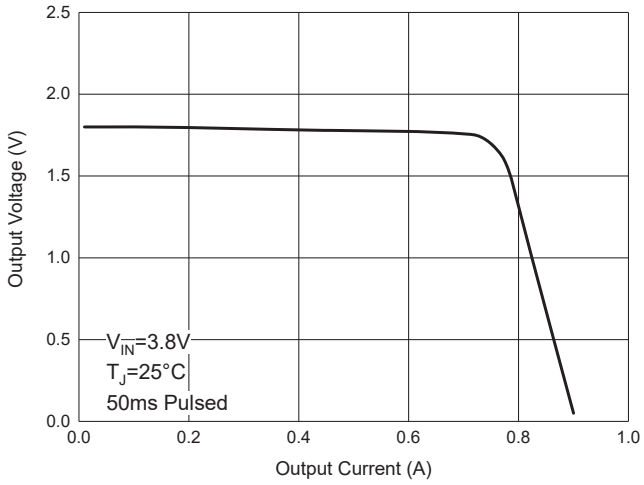

Fig. 5 - PSRR vs. Frequency

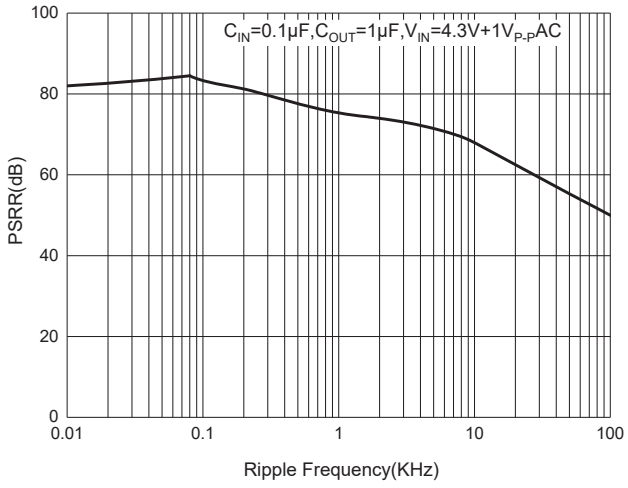

Ordering Information

Device	Packing
Part Number-TP	Tape&Reel: 3Kpcs/Reel

*****IMPORTANT NOTICE*****

Micro Commercial Components Corp. reserves the right to make changes without further notice to any product herein to make corrections, modifications , enhancements , improvements , or other changes . ***Micro Commercial Components Corp*** . does not assume any liability arising out of the application or use of any product described herein; neither does it convey any license under its patent rights ,nor the rights of others . The user of products in such applications shall assume all risks of such use and will agree to hold ***Micro Commercial Components Corp*** . and all the companies whose products are represented on our website, harmless against all damages. ***Micro Commercial Components Corp***. products are sold subject to the general terms and conditions of commercial sale, as published at **https://www.mccsemi.com/Home/TermsAndConditions.**

*****LIFE SUPPORT*****

MCC's products are not authorized for use as critical components in life support devices or systems without the express written approval of Micro Commercial Components Corporation.

*****CUSTOMER AWARENESS*****

Counterfeiting of semiconductor parts is a growing problem in the industry. Micro Commercial Components (MCC) is taking strong measures to protect ourselves and our customers from the proliferation of counterfeit parts. MCC strongly encourages customers to purchase MCC parts either directly from MCC or from Authorized MCC Distributors who are listed by country on our web page cited below. Products customers buy either from MCC directly or from Authorized MCC Distributors are genuine parts, have full traceability, meet MCC's quality standards for handling and storage. **MCC will not provide any warranty coverage or other assistance for parts bought from Unauthorized Sources**. MCC is committed to combat this global problem and encourage our customers to do their part in stopping this practice by buying direct or from authorized distributors.

ENTEGRECİ

Bu belge www.entegreci.com üzerinden sunulmaktadır.

Elektronik komponent tedarikinde Entegreci

Entegreci, Eskişehir merkezli, Türkiye geneline satış yapan bir elektronik komponent mağazasıdır. Entegreler (IC), mikrodenetleyiciler, transistörler, diyotlar, pasif elemanlar, konnektörler, modüller ve geliştirme kartları tek adetten seri üretim adetlerine kadar satılır. Ürün sayfalarında güncel stok durumunu, fiyatı ve datasheet bağlantısını bulabilirsiniz.

Parça koduyla arama

Üretici parça numarasını yazın; stok ve fiyatı hemen görün.

www.entegreci.com

Ürün kategorileri

Entegreden kapasitöre tüm elektronik komponent kategorileri.

Kategorilere göz atın

Üreticiler

Aradığınız üreticinin ürünlerini tek sayfada inceleyin.

Üreticileri görün

Toplu alım ve teklif

Listede olmayan ya da yüksek adetli parçalar için teklif isteyin.

Teklif isteyin

www.entegreci.com | **destek@entegreci.com** | **0850 305 90 34**

Entegreci is an online electronic components store based in Türkiye. Search by manufacturer part number to see stock, prices and datasheets for integrated circuits, microcontrollers, transistors, passive components and connectors, or request a quote for parts that are not listed.

Bu sayfa Entegreci tarafından eklenmiştir. Belgenin önceki sayfaları asıl yayıncısına aittir ve içeriği değiştirilmemiştir; en güncel sürüm için belgenin yayıncısına başvurun.