Features

- Internal Thermal Overload Protection
- Internal Short Circuit Current Limiting
- No External Components Required
- Epoxy Meets UL 94 V-0 Flammability Rating
- Halogen Free Available Upon Request By Adding Suffix "-HF"
- Lead Free Finish/RoHS Compliant(Note1) ("P" Suffix Designates RoHS Compliant. See ordering information)

Three-Terminal Positive Voltage Regulators

Maximum Ratings

Parameter	Symbol	Value	Unit
Input Voltage	V_I	35	V
Output Current	I_o	1.5	A
Power Dissipation	P_D	15	W
Operating Junction Temperature Range	T_{OPR}	-20~125	℃
Storage Temperature Range	T_{STG}	-55~125	℃

Notes:1.High Temperature Solder Exemption Applied, see EU Directive Annex 7a.

TO-220

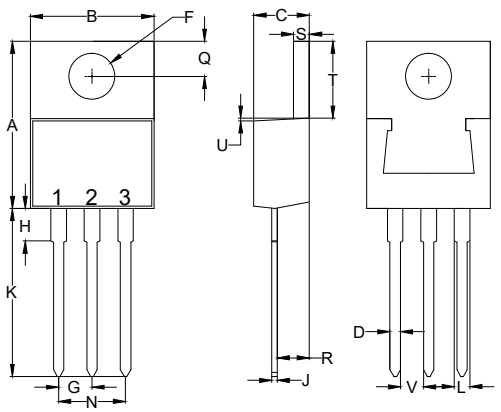

PIN 1. INPUT
PIN 2. GND
PIN 3. OUTPUT

DIMENSIONS					
DIM	INCHES		MM		NOTE
	MIN	MAX	MIN	MAX	
A	0.560	0.625	14.22	15.88	
B	0.380	0.420	9.65	10.67	
C	0.140	0.190	3.56	4.82	
D	0.020	0.045	0.51	1.14	
F	0.139	0.161	3.53	4.09	Φ
G	0.090	0.110	2.29	2.79	
H	-----	0.250	-----	6.35	
J	0.012	0.025	0.30	0.64	
K	0.500	0.580	12.70	14.73	
L	0.045	0.060	1.14	1.52	
N	0.190	0.210	4.83	5.33	
Q	0.100	0.135	2.54	3.43	
R	0.080	0.115	2.04	2.92	
S	0.045	0.055	1.14	1.39	
T	0.230	0.270	5.84	6.86	
U	-----	0.050	-----	1.27	
V	0.045	-----	1.15	-----	

Electrical Characteristics

(V_i=10V, I_o=500mA, 0°C＜T_j＜ 125 °C,C_i=0.33uF, C_o=0.1uF,Unless Otherwise Specified)

Parameter	Symbol	Test Conditions	Min	Typ	Max	Unit
Output Voltage	Vo	T_j=25°C	4.8	5.0	5.2	V
		7V≤V_i≤20V,5mA≤I_o≤1000mA , P_D=15W	4.75	-	5.25	V
Load Regulation	△Vo	5mA≤I_o≤1500mA,T_j=25°C	-	9.0	100	mV
		250mA≤I_o≤750mA,T_j=25°C	-	4.0	50	mV
Line Regulation	△Vo	7.0V≤V_1≤25V,T_j=25°C	-	4.0	100	mV
		8.0V≤V_1≤12V,T_j=25°C	-	1.6	50	mV
Quiescent Current	Iq	T_j=25°C,I_o=0	-	5.0	8.0	mA
Quiescent Current Change	△I_q	7V≤V_i≤25V,	-	0.3	1.3	mA
		5mA≤I_o≤1000mA	-	0.03	0.5	mA
Output Noise Voltage	V_N	10Hz≤f≤100KHz	-	42	-	μV
Ripple Rejection	RR	8V≤V_i≤20V,f=120Hz,T_j=25°C	62	73	-	dB
Dropout Voltage	V_d	T_j=25°C,I_o=1.0A	-	2	-	V
Output Short Circuit Current	Ro	f=1.0KHz	-	10	-	mohm
Output Short Circuit Current	I_{OS}	T_j=25°C	-	230	-	mA
Peak Output Current	I_{opeak}	T_j=25°C	-	2.2	-	A
Temperature Coefficient of Output Voltage	△Vo/△T_j	0°C≤T_j≤125°C,I_o=5.0mA	-	1.1	-	mV/°C

Representation Schematic Diagram

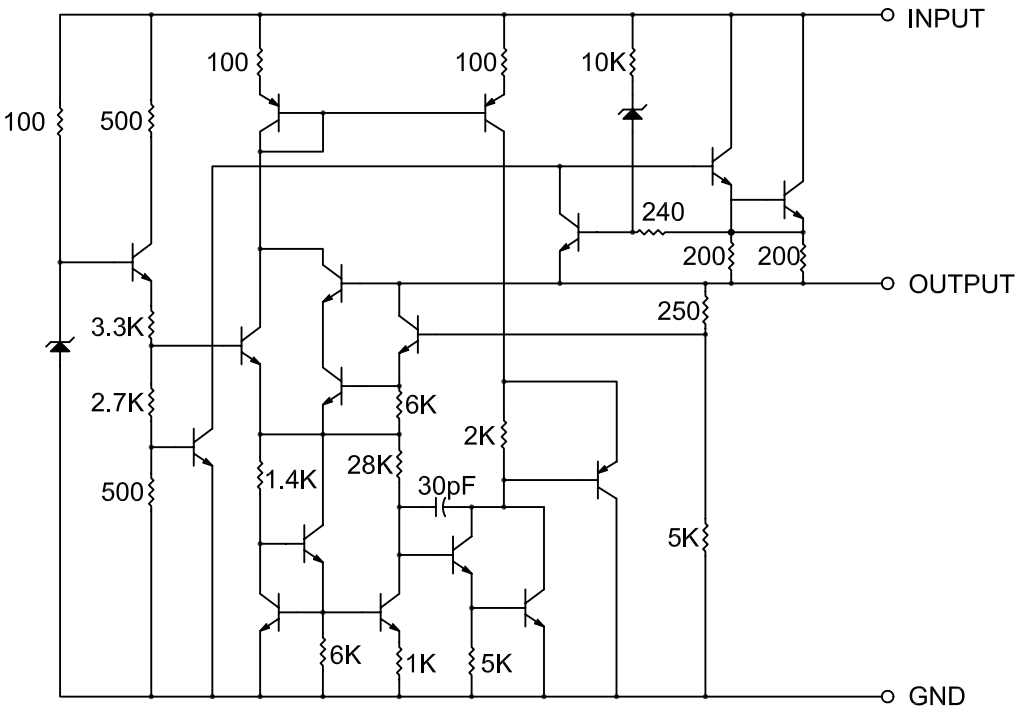

Ordering Information

Device	Packing
Part Number-BP	Bulk:50pcs/Tube,1Kpcs/Box,5Kpcs/Carton

Note : Adding "-HF" Suffix For Halogen Free, eg. Part Number-BP-HF

*****IMPORTANT NOTICE*****

Micro Commercial Components Corp. reserves the right to make changes without further notice to any product herein to make corrections, modifications , enhancements , improvements , or other changes . ***Micro Commercial Components Corp*** . does not assume any liability arising out of the application or use of any product described herein; neither does it convey any license under its patent rights ,nor the rights of others . The user of products in such applications shall assume all risks of such use and will agree to hold ***Micro Commercial Components Corp*** . and all the companies whose products are represented on our website, harmless against all damages. ***Micro Commercial Components Corp***. products are sold subject to the general terms and conditions of commercial sale, as published at **https://www.mccsemi.com/Home/TermsAndConditions.**

*****LIFE SUPPORT*****

MCC's products are not authorized for use as critical components in life support devices or systems without the express written approval of Micro Commercial Components Corporation.

*****CUSTOMER AWARENESS*****

Counterfeiting of semiconductor parts is a growing problem in the industry. Micro Commercial Components (MCC) is taking strong measures to protect ourselves and our customers from the proliferation of counterfeit parts. MCC strongly encourages customers to purchase MCC parts either directly from MCC or from Authorized MCC Distributors who are listed by country on our web page cited below. Products customers buy either from MCC directly or from Authorized MCC Distributors are genuine parts, have full traceability, meet MCC's quality standards for handling and storage. **MCC will not provide any warranty coverage or other assistance for parts bought from Unauthorized Sources**. MCC is committed to combat this global problem and encourage our customers to do their part in stopping this practice by buying direct or from authorized distributors.

ENTEGRECİ

Bu belge www.entegreci.com üzerinden sunulmaktadır.

Elektronik komponent tedarikinde Entegreci

Entegreci, Eskişehir merkezli, Türkiye geneline satış yapan bir elektronik komponent mağazasıdır. Entegreler (IC), mikrodenetleyiciler, transistörler, diyotlar, pasif elemanlar, konnektörler, modüller ve geliştirme kartları tek adetten seri üretim adetlerine kadar satılır. Ürün sayfalarında güncel stok durumunu, fiyatı ve datasheet bağlantısını bulabilirsiniz.

Parça koduyla arama

Üretici parça numarasını yazın; stok ve fiyatı hemen görün.

www.entegreci.com

Ürün kategorileri

Entegreden kapasitöre tüm elektronik komponent kategorileri.

Kategorilere göz atın

Üreticiler

Aradığınız üreticinin ürünlerini tek sayfada inceleyin.

Üreticileri görün

Toplu alım ve teklif

Listede olmayan ya da yüksek adetli parçalar için teklif isteyin.

Teklif isteyin

www.entegreci.com | **destek@entegreci.com** | **0850 305 90 34**

Entegreci is an online electronic components store based in Türkiye. Search by manufacturer part number to see stock, prices and datasheets for integrated circuits, microcontrollers, transistors, passive components and connectors, or request a quote for parts that are not listed.

Bu sayfa Entegreci tarafından eklenmiştir. Belgenin önceki sayfaları asıl yayıncısına aittir ve içeriği değiştirilmemiştir; en güncel sürüm için belgenin yayıncısına başvurun.