LOW DROPOUT VOLTAGE REGULATOR WITH ON/OFF CONTROL

■ GENERAL DESCRIPTION

The NJM2370 is a low dropout positive voltage regulator with ON/OFF control. It has a low quiescent current, output current of 150mA and low dropout voltage of 0.1V (at IO=30mA). Further it can be added an external noise bypass capacitor. It can be improve the characteristics of output noise and ripple rejection by changing the capacitance value.

The NJM2370 is available in a small 5-lead SOT-89 package and thin 8-lead MSOP (VSP) and MSOP (TVSP) packages. These performances make it well-suited for battery-powered portable devices such as a mobile phone, PHS and movie camera.

■ PACKAGE OUTLINE

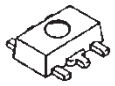

NJM2370U1
(SOT89-5)

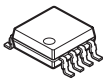

NJM2370R
(MSOP8 (VSP8))

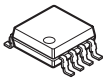

NJM2370RB1
(MSOP8 (TVSP8))

■ FEATURES

- Output Current (150mA min. (V_O-0.3V))
- Low Dropout Voltage (0.1V typ. (I_O=30mA))
- External Capacitor for Noise Bypass
- ON / OFF Control Function
- Over Current Limit
- Thermal Shutdown
- Bipolar Technology
- Package Outline SOT-89-5, MSOP8 (VSP8)*, MSOP8 (TVSP8)**

*MEET JEDEC MO-187-DA, **MEET JEDEC MO-187-DA / THIN TYPE

■ PIN CONFIGURATION

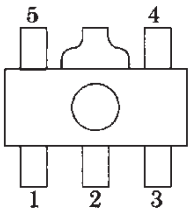

NJM2370U1

PIN FUNCTION
1. CONTROL
2. GND
3. NOISE BYPASS
4. V_{OUT}
5. V_{IN}

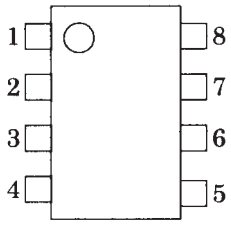

NJM2370R/RB1

PIN FUNCTION
1. CONTROL
2. GND
3. NC
4. NOISE BYPASS
5. V_{OUT}
6. NC
7. NC
8. V_{IN}

■ EQUIVALENT CIRCUIT

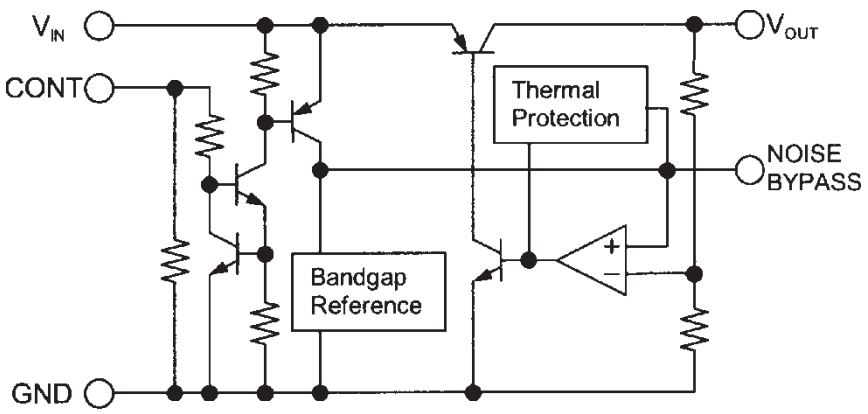

■ ABSOLUTE MAXIMUM RATINGS

(T_a=25°C)

PARAMETER	SYMBOL	RATINGS	UNIT
Input Voltage	V_{IN}	20	V
Control Voltage	V_{CONT}	20 (note 1)	V
Power Dissipation	P_D	(SOT-89) 350 MSOP8 (VSP8), MSOP8(TVSP8) 320	mW
Operating Temperature Range	T_{opr}	-40 to +85	°C
Storage Temperature Range	T_{stg}	-40 to +125	°C

(note 1) When input voltage is less than +20V, the absolute maximum control voltage is equal to the input voltage.

■ ELECTRICAL CHARACTERISTICS

(T_a=25°C)

PARAMETER	SYMBOL	CONDITIONS	MIN.	TYP.	MAX.	UNIT
Output Voltage	V_O	V_{IN}=V_O+1V, I_O=30mA	-3%	-	+3%	V
Quiescent Current 1	I_Q1	I_O=0mA, expect I_{CONT}	-	180	-	µA
Quiescent Current 2	I_Q2	CONTROL-GND short	-	-	100	nA
Output Current	I_O	(V_O-0.3V)	150	180	-	mA
Line Regulation	$\Delta V_O / \Delta V_{IN}$	V_{IN}=(V_O+1V) to (V_O+6V) V_O=2V to 14V	-	-	0.12	% / V
		V_{IN}=(V_O+1V) to (V_O+5V) V_O=15V	-	-	0.12	% / V
Load Regulation	$\Delta V_O / \Delta I_O$	I_O=0 to 60mA	-	-	0.03	% / mA
Dropout Voltage	ΔV_{I-O}	I_O=30mA	-	0.1	0.3	V
Ripple Rejection	R·R	f=400Hz, e_{in}=100mV_{P-P} V_{IN}= V_O+1.5V, I_O=10mA	-	60	-	dB
Average Temperature Coefficient of Output Voltage	$\Delta V_O / \Delta T_a$	Ta=-20 to 75°C, I_O=10mA V_{IN}=V_O+1.5V	-	0.2	-	mV / °C
Output Noise Voltage	V_{NO}	10Hz < f < 80kHz, I_O=10mA, V_O=3V	-	30	-	µVrms

(note 2) Please confirm the specification separately because some parameters depend on output voltage.

■ TEST CIRCUIT

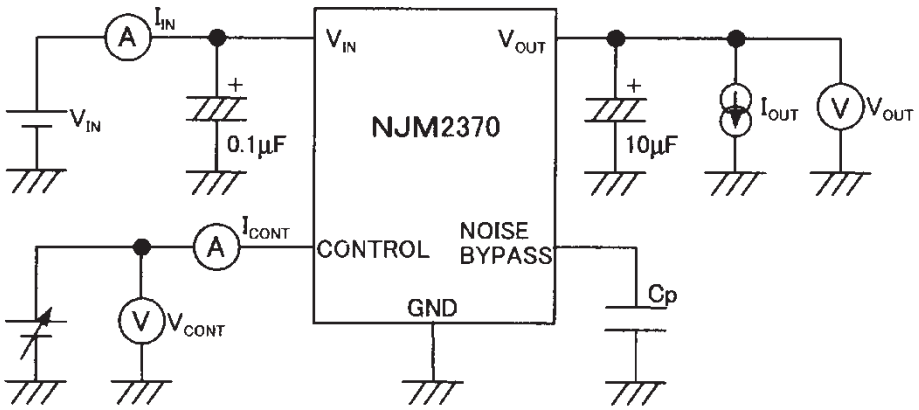

■ TYPICAL APPLICATION

(1) In Nonuse of ON / OFF Control

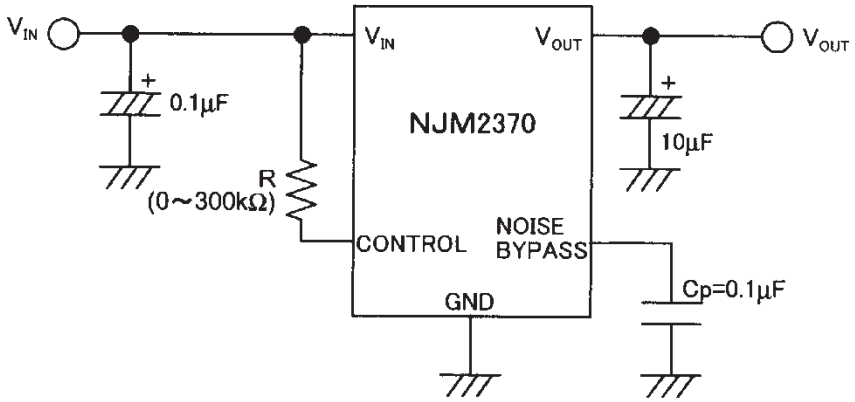

Connect control terminal (1Pin) to V_{IN} terminal (5Pin)

When a resistance "R" is connected, the quiescent current decreases, but minimum operating voltage increases. Please refer to a figure of Output Voltage vs. Control Voltage.

(2) In Use of ON / OFF CONTROL

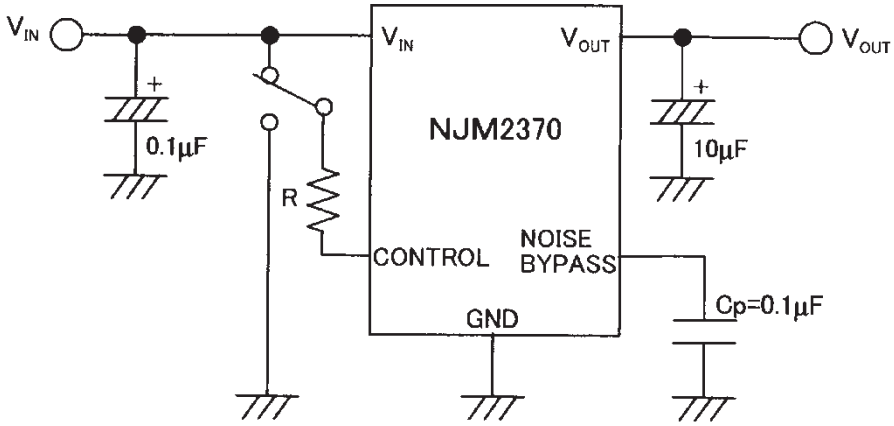

When the control terminal is "H", it is ON.

When the control terminal is "L" or "open", it is OFF.

*Noise bypass Capacitance Cp

Noise bypass capacitance CP reduces noise generated by band-gap reference circuit.

Noise level and ripple rejection will be improved when larger CP is used. Please refer to the typical characteristics to determine the value.

Use of smaller CP value may induce oscillation.

Please make sure to use CP value of greater than 0.1uF to avoid the problem.

■ OUTPUT VOLTAGE RANK LIST

Past Number	Output Voltage		Past Number	Output Voltage		Past Number	Output Voltage	
NJM2370U1/R/RB1-02	2.0V		NJM2370U1/R/RB1-31	3.1V		NJM2370U1/R/RB1-08	8.0V	(*1)
NJM2370U1/R/RB1-21	2.1V	(*1)	NJM2370U1/R/RB1-32	3.2V	(*1)	NJM2370U1/R/RB1-85	8.5V	
NJM2370U1/R/RB1-22	2.2V	(*1)	NJM2370U1/R/RB1-33	3.3V		NJM2370U1/R/RB1-09	9.0V	
NJM2370U1/R/RB1-23	2.3V	(*1)	NJM2370U1/R/RB1-35	3.5V		NJM2370U1/R/RB1-10	10.0V	
NJM2370U1/R/RB1-24	2.4V	(*1)	NJM2370U1/R/RB1-36	3.6V	(*1)	NJM2370U1/R/RB1-12	12.0V	
NJM2370U1/R/RB1-25	2.5V		NJM2370U1/R/RB1-37	3.7V	(*1)	NJM2370U1/R/RB1-13	13.0V	(*2)
NJM2370U1/R/RB1-26	2.6V	(*1)	NJM2370U1/R/RB1-38	3.8V	(*1)	NJM2370U1/R/RB1-D3	13.5V	
NJM2370U1/R/RB1-27	2.7V		NJM2370U1/R/RB1-39	3.9V	(*1)	NJM2370U1/R/RB1-15	15.0V	
NJM2370U1/R/RB1-28	2.8V	(*1)	NJM2370U1/R/RB1-04	4.0V		NJM2370U1/R/RB1-F5	15.5V	
NJM2370U1/R/RB1-29	2.9V	(*1)	NJM2370U1/R/RB1-05	5.0V				
NJM2370U1/R/RB1-03	3.0V		NJM2370U1/R/RB1-06	6.0V				

(*1) : MSOP8(VSP8), MSOP8(TVSP8) ONLY
(*2) : SOT-89-5 (5pin) ONLY

■ POWER DISSIPATION VS. AMBIENT TEMPERATURE

NJM2370 Power Dissipation
(Topr=-40～+85℃,Tj=125℃)

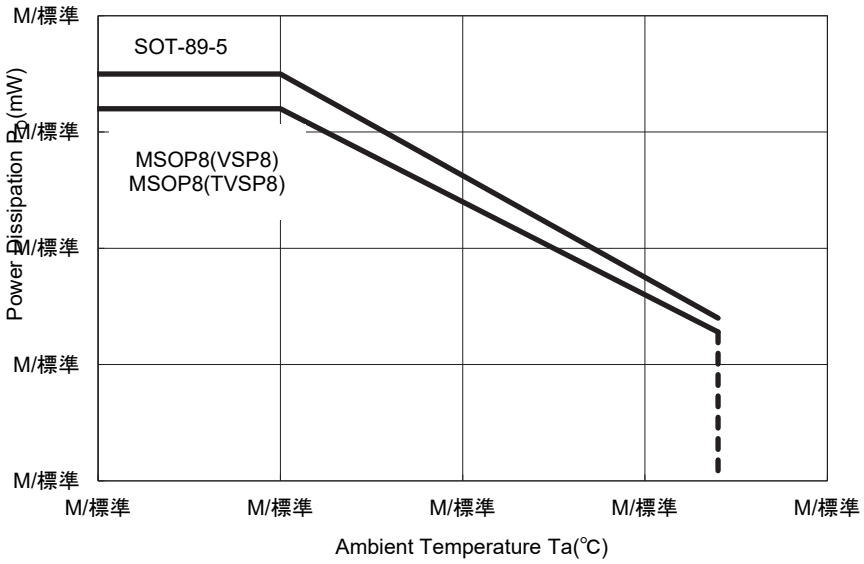

■ TYPICAL CHARACTERISTICS

NJM2370 3V Version Dropout Voltage

(V_{IN}=V_{CONT}, Ta=25°C)

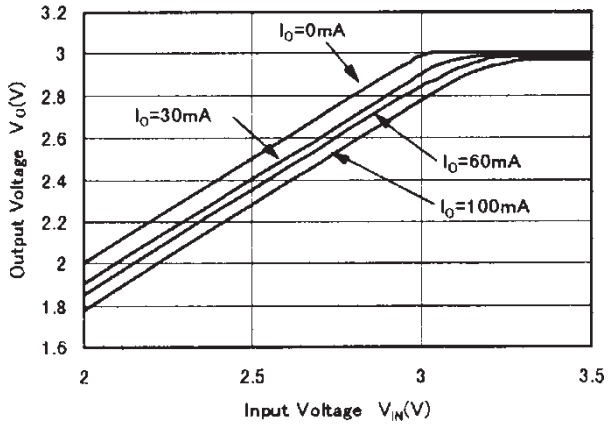

NJM2370 3V Version Load Regulation

(V_{IN}=V_{CONT}=4V, Ta=25°C)

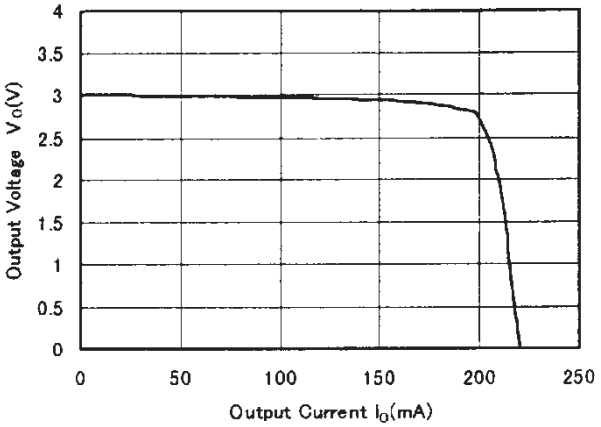

NJM2370 3V Version GND Current vs. Output Current

(V_{IN}=V_{CONT}=4V, Ta=25°C)

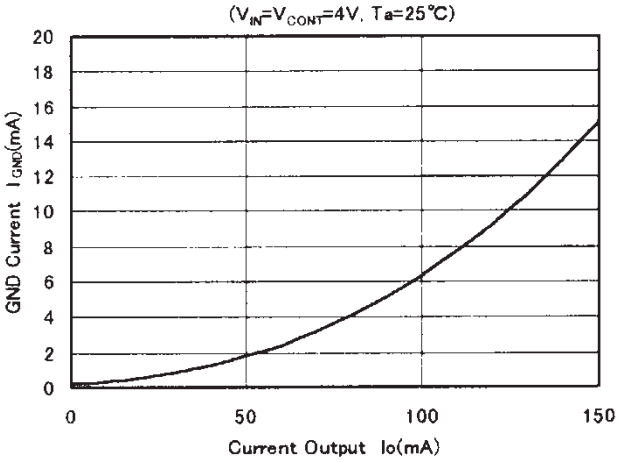

NJM2370 3V Version Dropout Voltage

(Ta=25°C)

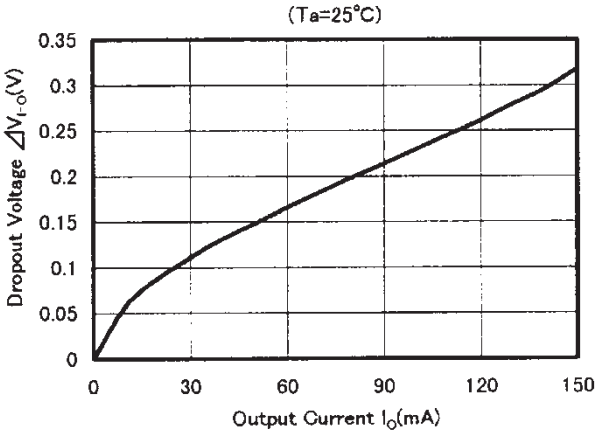

■ TYPICAL CHARACTERISTICS

NJM2370 3V Version Control Current vs. Control Voltage

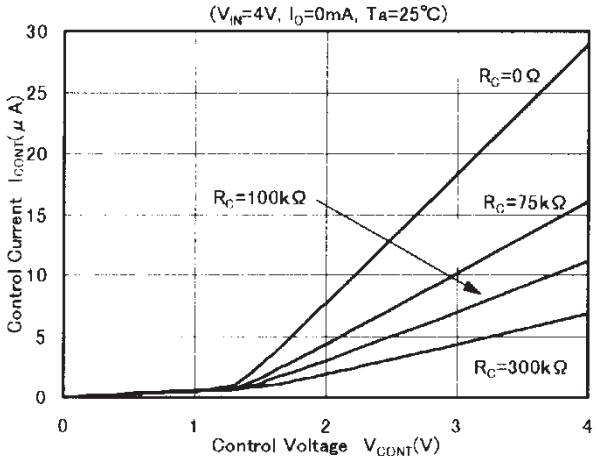

NJM2370 3V Version Output Voltage vs. Control Voltage

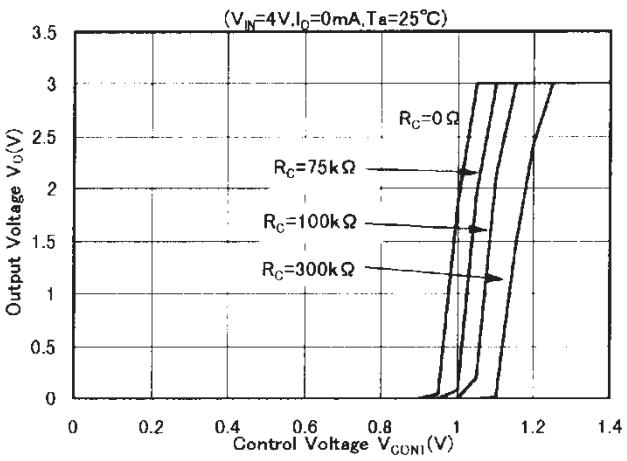

NJM2370 3V Version Output Noise Voltage vs. Noise Bypass Capacitor

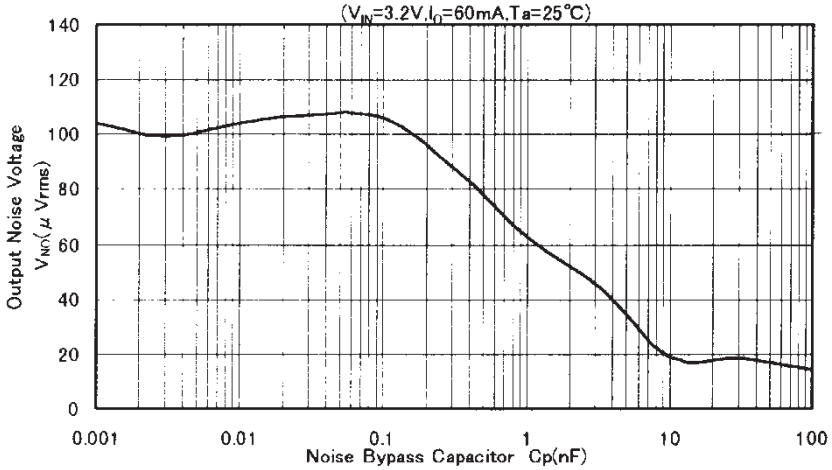

NJM2370 3V Version Ripple Rejection vs. Frequency

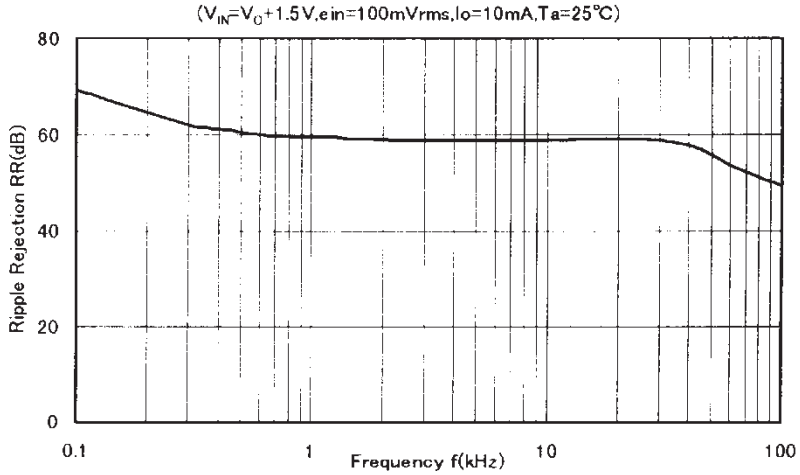

■ TYPICAL CHARACTERISTICS

Dropout Voltage vs. Ambient Temperature

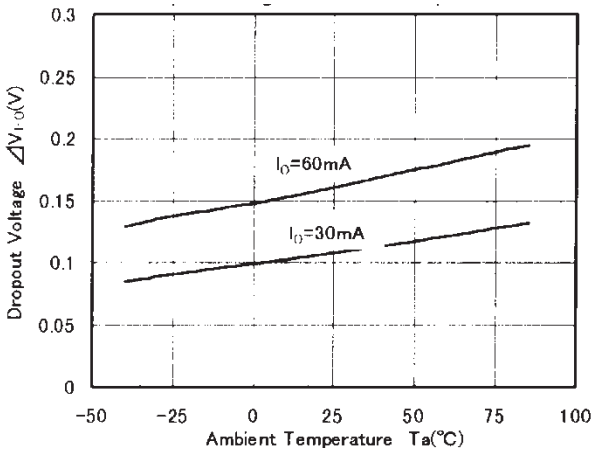

NJM2370 3V Version Control Current vs. Ambient Temperature

(V_{IN}=V_{CONT}=4V,R_C=0Ω)

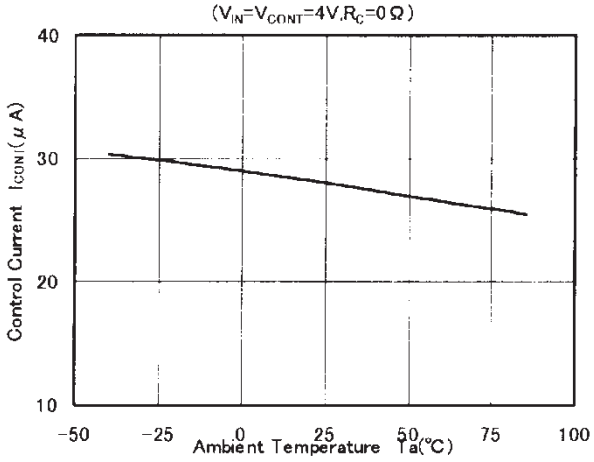

NJM2370 3V Version Quiescent Current 1 vs. Ambient Temperature

(V_{IN}=4V,I_O=0mA)

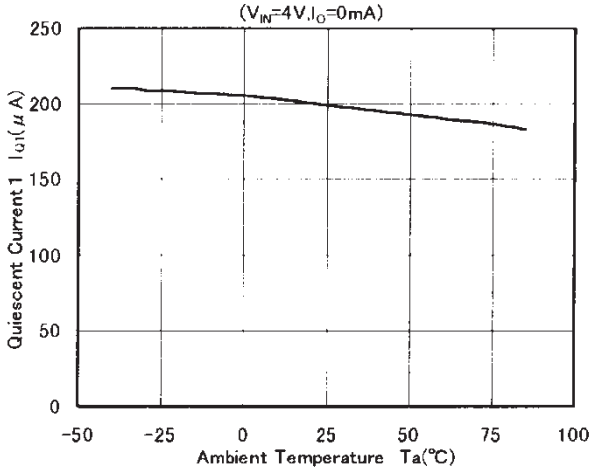

Thermal Shutdown

(V_{IN}=V_{CONT}=4V,I_O=10mA)

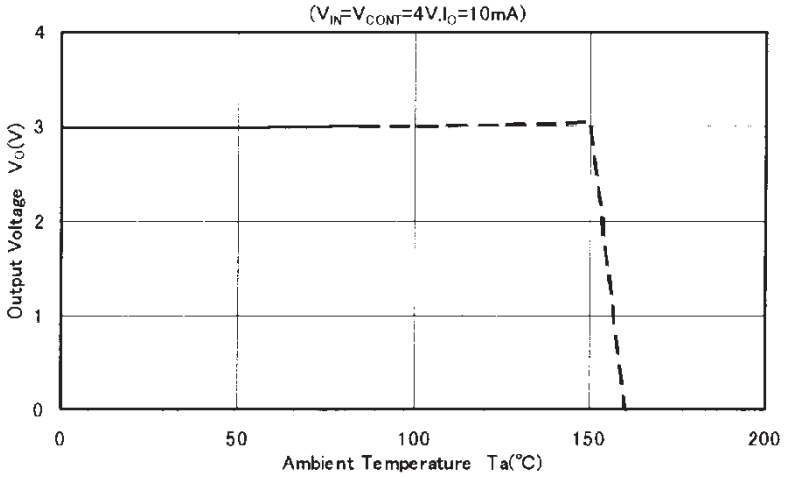

[CAUTION]
The specifications on this datasheet are only given for information , without any guarantee as regards either mistakes or omissions. The application circuits in this datasheet are described only to show representative usages of the product and not intended for the guarantee or permission of any right including the industrial rights.

ENTEGRECİ

Bu belge www.entegreci.com üzerinden sunulmaktadır.

Elektronik komponent tedarikinde Entegreci

Entegreci, Eskişehir merkezli, Türkiye geneline satış yapan bir elektronik komponent mağazasıdır. Entegreler (IC), mikrodenetleyiciler, transistörler, diyotlar, pasif elemanlar, konnektörler, modüller ve geliştirme kartları tek adetten seri üretim adetlerine kadar satılır. Ürün sayfalarında güncel stok durumunu, fiyatı ve datasheet bağlantısını bulabilirsiniz.

Parça koduyla arama

Üretici parça numarasını yazın; stok ve fiyatı hemen görün.

www.entegreci.com

Ürün kategorileri

Entegreden kapasitöre tüm elektronik komponent kategorileri.

Kategorilere göz atın

Üreticiler

Aradığınız üreticinin ürünlerini tek sayfada inceleyin.

Üreticileri görün

Toplu alım ve teklif

Listede olmayan ya da yüksek adetli parçalar için teklif isteyin.

Teklif isteyin

www.entegreci.com | **destek@entegreci.com** | **0850 305 90 34**

Entegreci is an online electronic components store based in Türkiye. Search by manufacturer part number to see stock, prices and datasheets for integrated circuits, microcontrollers, transistors, passive components and connectors, or request a quote for parts that are not listed.

Bu sayfa Entegreci tarafından eklenmiştir. Belgenin önceki sayfaları asıl yayıncısına aittir ve içeriği değiştirilmemiştir; en güncel sürüm için belgenin yayıncısına başvurun.