LOW DROPOUT VOLTAGE REGULATOR

■ GENERAL DESCRIPTION

The NJM2865/66 is a 100mA output low dropout voltage regulator with ON/OFF control.

Advanced Bipolar technology achieves low noise, high ripple rejection and low quiescent current.

Small packaging, 1µF small decoupling capacitor, built-in noise bypass capacitor make the NJM2865/66 suitable for space conscious applications.

■ PACKAGE OUTLINE



NJM2865F3



NJM2865F/66F

■ FEATURES

- High Ripple Rejection 75dB typ. (f=1kHz Vo=3V Version)
- Output Noise Voltage Vno=45µVrms typ.
- Output capacitor with 1.0µF ceramic capacitor (Vo≥2.7V)
- Output Current Io(max.)=100mA
- High Precision Output Vo±1.0%
- Low Dropout Voltage 0.10V typ. (Io=60mA)
- Input Voltage Range +2.3V ~ +14V(Vo≤2.0 Version)
- ON/OFF Control (Active High)
- Internal Short Circuit Current Limit
- Internal Thermal Overload Protection
- Bipolar Technology
- Package Outline SC88A (NJM2865F3), SOT-23-5 (NJM2865F/66F)

■ PIN CONFIGURATION

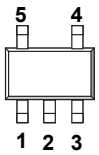

1. CONTROL
2. GND
3. NC
4. V_{OUT}
5. V_{IN}

NJM2865F3 / NJM2865F

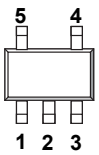

1. V_{IN}
2. GND
3. CONTROL
4. NC
5. V_{OUT}

NJM2866F

■ EQUIVALENT CIRCUIT

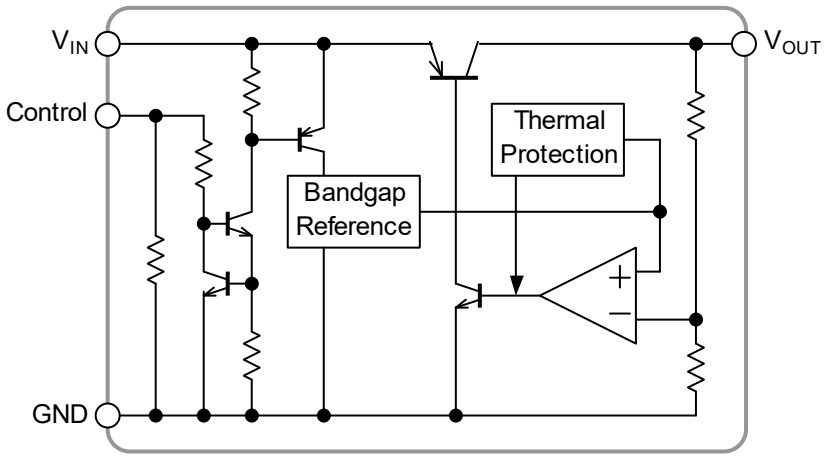

■ OUTPUT VOLTAGE RANK LIST

Device Name	V_{OUT}	Device Name	V_{OUT}	Device Name	V_{OUT}
NJM2865F3-/F15	1.5V	NJM2865F3-/F29	2.9V	NJM2865F3-/F38	3.8V
NJM2865F3-/F18	1.8V	NJM2865F3-/F03	3.0V	NJM2865F3-/F04	4.0V
NJM2865F3-/F21	2.1V	NJM2865F3-/F31	3.1V	NJM2865F3-/F445	4.45V
NJM2865F3-/F24	2.4V	NJM2865F3-/F32	3.2V	NJM2865F3-/F46	4.6V
NJM2865F3-/F25	2.5V	NJM2865F3-/F33	3.3V	NJM2865F3-/F48	4.8V
NJM2865F3-/F26	2.6V	NJM2865F3-/F34	3.4V	NJM2865F3-/F05	5.0V
NJM2865F3-/F27	2.7V	NJM2865F3-/F35	3.5V		
NJM2865F3-/F28	2.8V	NJM2865F3-/F36	3.6V		

Device Name	V_{OUT}	Device Name	V_{OUT}	Device Name	V_{OUT}
NJM2866F15	1.5V	NJM2866F29	2.9V	NJM2866F38	3.8V
NJM2866F18	1.8V	NJM2866F03	3.0V	NJM2866F04	4.0V
NJM2866F21	2.1V	NJM2866F31	3.1V	NJM2866F445	4.45V
NJM2866F24	2.4V	NJM2866F32	3.2V	NJM2866F46	4.6V
NJM2866F25	2.5V	NJM2866F33	3.3V	NJM2866F48	4.8V
NJM2866F26	2.6V	NJM2866F34	3.4V	NJM2866F05	5.0V
NJM2866F27	2.7V	NJM2866F35	3.5V		
NJM2866F28	2.8V	NJM2866F36	3.6V		

■ ABSOLUTE MAXIMUM RATINGS (Ta=25°C)

PARAMETER	SYMBOL	RATINGS		UNIT
Input Voltage	V_{IN}	+14		V
Control Voltage	V_{CONT}	+14(*1)		V
Power Dissipation	P_D	SC88A	250(*2)	mW
		SOT-23-5	200(*3)	
			350(*2)	
Operating Temperature	Topr	-40~+85		°C
Storage Temperature	Tstg	-40~+125		°C

(*1): When input voltage is less than +14V, the absolute maximum control voltage is equal to the input voltage.

(*2): Mounted on glass epoxy board based on EIA/JEDEC. (114.3x76.2x1.6mm: 2Layers)

(*3): Device itself.

■ Operating voltage

V_{IN}=+2.3V ~ +14.0V (In case of Vo<2.1V)

■ ELECTRICAL CHARACTERISTICS

(Vo≥2.0V version: V_{IN}=Vo+1V, C_{IN}=0.1µF, Co=1.0µF: Vo≥2.7V (Co=2.2µF: Vo≤2.6V), Ta=25°C)

PARAMETER	SYMBOL	TEST CONDITION	MIN.	TYP.	MAX.	UNIT
Output Voltage	Vo	Io=30mA	-1.0%	–	+1.0%	V
Quiescent Current	I_Q	Io=0mA, expect Icont	–	120	180	µA
Quiescent Current at Control OFF	$I_{Q(OFF)}$	V_{CONT}=0V	–	–	100	nA
Output Current	Io	Vo-0.3V	100	130	–	mA
Line Regulation	$\Delta Vo/\Delta V_{IN}$	V_{IN}=Vo+1V ~ Vo+6V, Io=30mA	–	–	0.10	%/V
Load Regulation	$\Delta Vo/\Delta Io$	Io=0 ~ 60mA	–	–	0.03	%/mA
Dropout Voltage	ΔV_{I-O}	Io=60mA	–	0.10	0.18	V
Ripple Rejection	RR	ein=200mVrms,f=1kHz,Io=10mA, Vo=3V Version	–	75	–	dB
Average Temperature Coefficient of Output Voltage	$\Delta Vo/\Delta Ta$	Ta=0 ~ 85°C, Io=10mA	–	±50	–	ppm/°C
Output Noise Voltage	V_{NO}	f=10Hz ~ 80kHz, Io=10mA Vo=3V Version	–	45	–	µVrms
Control Current	I_{CONT}	V_{CONT}=1.6V, Io=0mA	–	–	12	µA
Control Voltage for ON-state	$V_{CONT(ON)}$		1.6	–	–	V
Control Voltage for OFF-state	$V_{CONT(OFF)}$		–	–	0.6	V

(Vo≤2.0V version: V_{IN}= Vo+1V, C_{IN}=0.1µF, Co=2.2µF(Co=4.7µF: Vo≤1.6V),Ta=25°C)

PARAMETER	SYMBOL	TEST CONDITION	MIN.	TYP.	MAX.	UNIT
Output Voltage	Vo	Io=30mA	-1.0%	–	+1.0%	V
Quiescent Current	I_Q	Io=0mA, expect Icont	–	120	180	µA
Quiescent Current at Control OFF	$I_{Q(OFF)}$	V_{CONT}=0V	–	–	100	nA
Output Current	Io	Vo-0.3V	100	130	–	mA
Line Regulation	$\Delta Vo/\Delta V_{IN}$	V_{IN}=Vo+1V ~ Vo+6V, Io=30mA	–	–	0.10	%/V
Load Regulation	$\Delta Vo/\Delta Io$	Io=0 ~ 60mA	–	–	0.03	%/mA
Ripple Rejection	RR	ein=200mVrms,f=1kHz,Io=10mA, Vo=1.8V Version	–	80	–	dB
Average Temperature Coefficient of Output Voltage	$\Delta Vo/\Delta Ta$	Ta=0 ~ 85°C, Io=10mA	–	±50	–	ppm/°C
Output Noise Voltage	V_{NO}	f=10Hz ~ 80kHz, Io=10mA Vo=1.8V Version	–	27	–	µVrms
Control Current	I_{CONT}	V_{CONT}=1.6V, Io=0mA	–	–	12	µA
Control Voltage for ON-state	$V_{CONT(ON)}$		1.6	–	–	V
Control Voltage for OFF-state	$V_{CONT(OFF)}$		–	–	0.6	V

The above specification is a common specification for all output voltages.
Therefore, it may be different from the individual specification for a specific output voltage.

■ TEST CIRCUIT

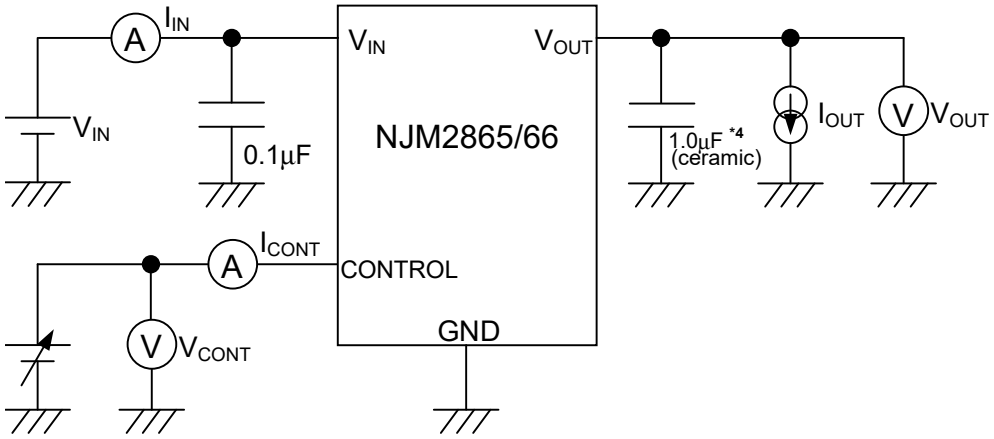

*4 1.6V<Vo≤2.6V version: Co=2.2µF(ceramic)
Vo≤1.6V version: 4.7µF(ceramic)

■ TYPICAL APPLICATION

① In the case where ON/OFF Control is not required:

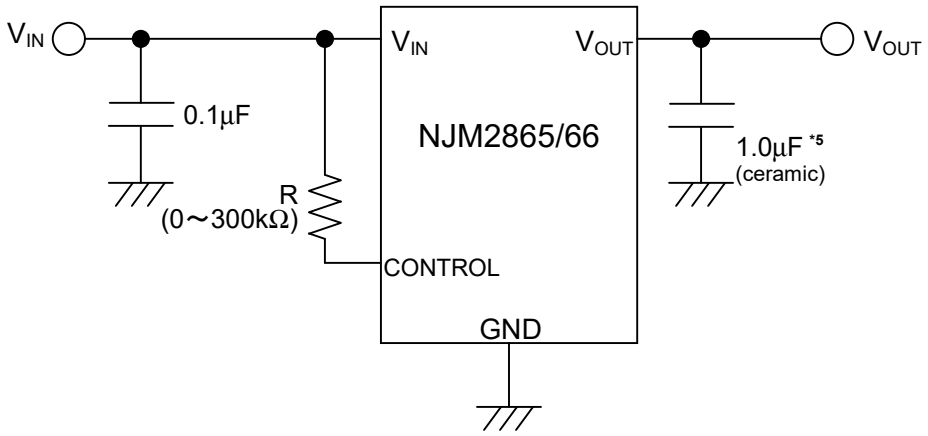

*5 1.6V<Vo≤2.6V version: Co=2.2µF(ceramic)
Vo≤1.6V version: 4.7µF(ceramic)

Connect control terminal to V_{IN} terminal

② In use of ON/OFF CONTROL:

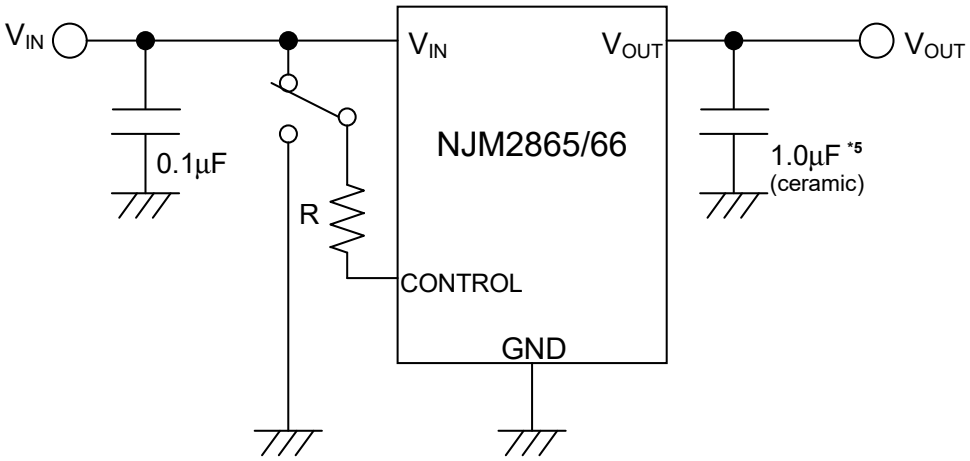

*5 1.6V<Vo≤2.6V version: Co=2.2µF(ceramic)
Vo≤1.6V version: 4.7µF(ceramic)

State of control terminal:

- "H"→ output is enabled.
- "L" or "open" → output is disabled.

∗In the case of using a resistance "R" between V_{IN} and control.

The current flow into the control terminal while the IC is ON state (I_{CONT}) can be reduced when a pull up resistance "R" is inserted between V_{IN} and the control terminal.

The minimum control voltage for ON state ($V_{CONT\,(ON)}$) is increased due to the voltage drop caused by I_{CONT} and the resistance "R". The I_{CONT} is temperature dependence as shown in the "Control Current vs. Temperature" characteristics. Therefore, the resistance "R" should be carefully selected to ensure the control voltage exceeds the $V_{CONT\,(ON)}$ over the required temperature range.

■ POWER DISSIPATION vs. AMBIENT TEMPERATURE

NJM2865/66F Power Dissipation
(Topr=-40～+85℃,Tj=125℃,P_D=200mW(Ta≦25℃))

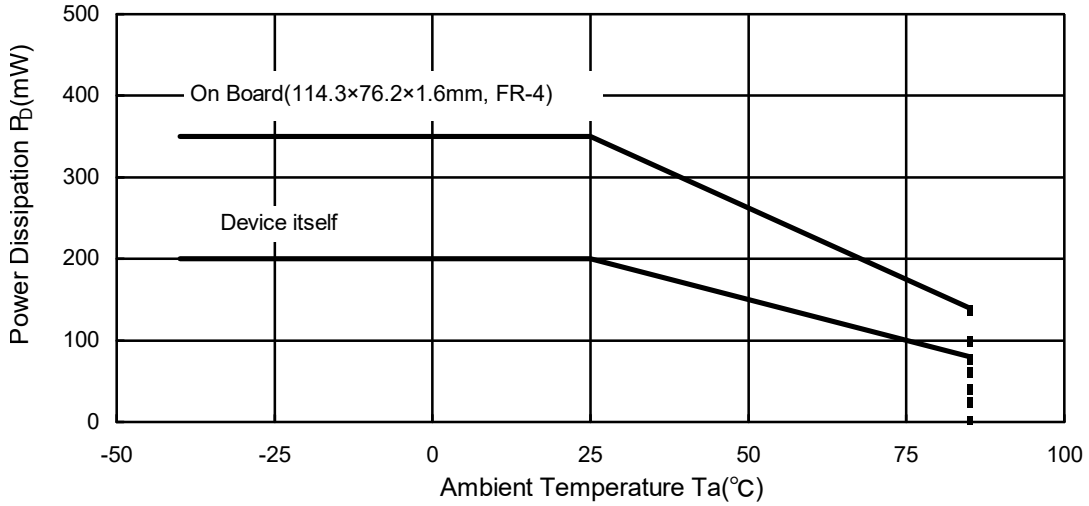

NJM2865F3 Power Dissipation
(Topr=-40～+85℃,Tj=125℃)

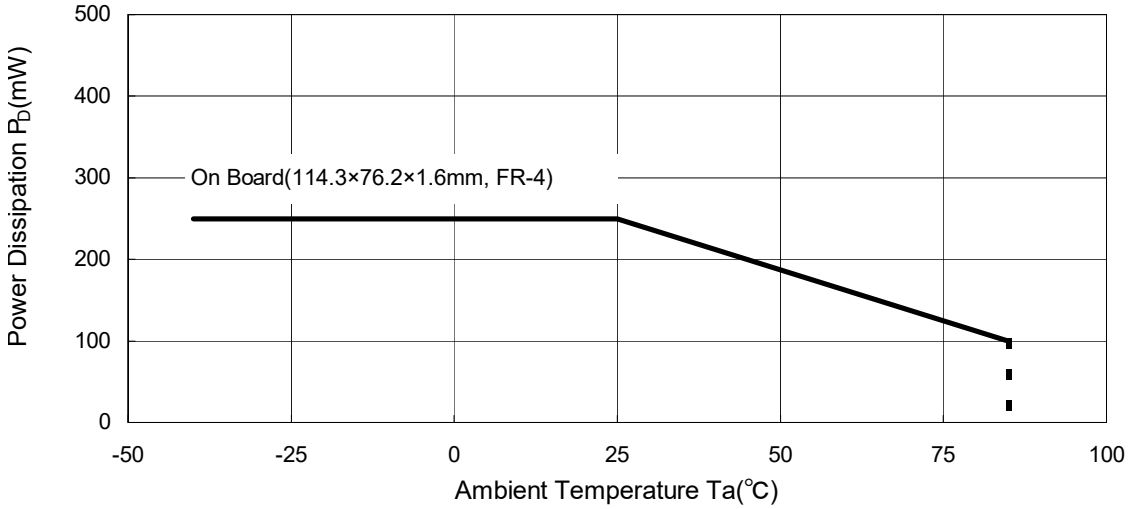

■ ELECTRICAL CHARACTERISTICS

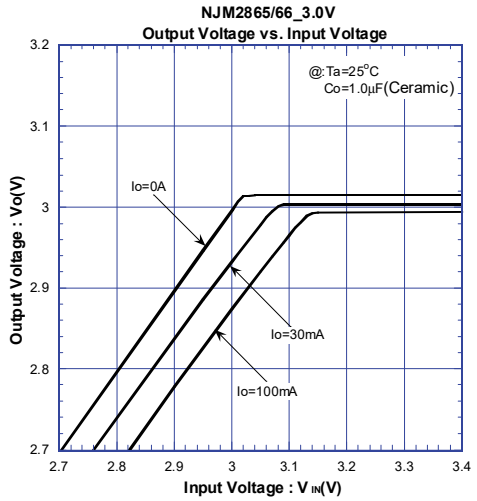

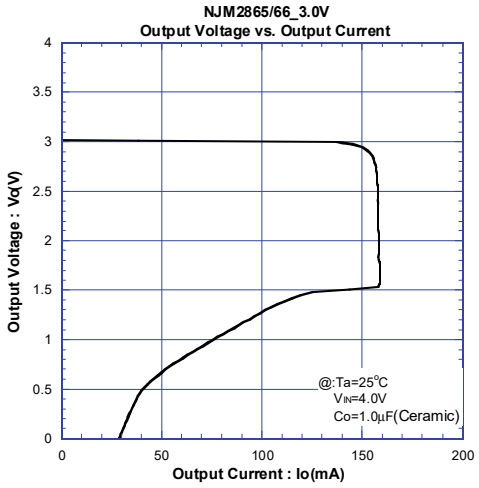

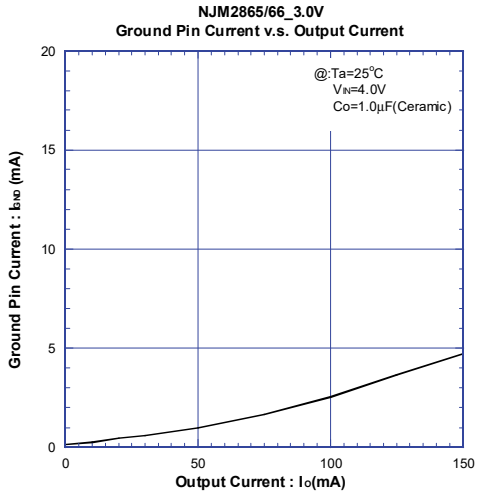

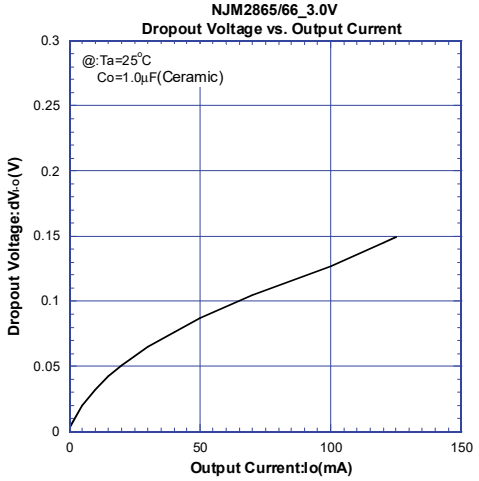

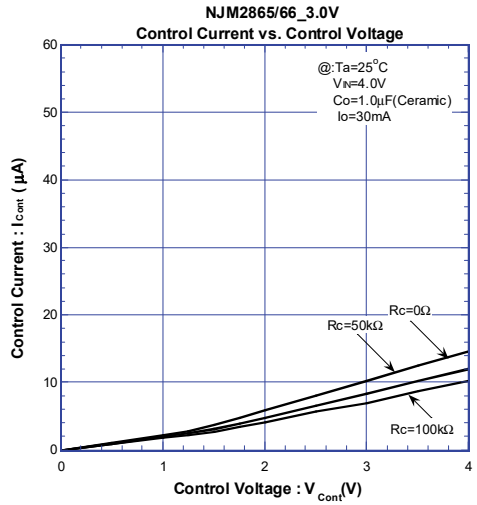

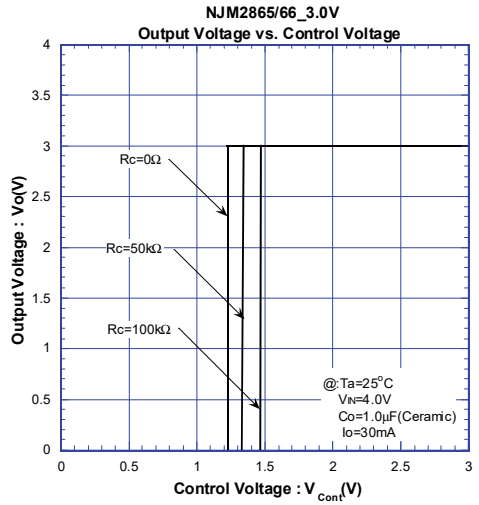

■ ELECTRICAL CHARACTERISTICS

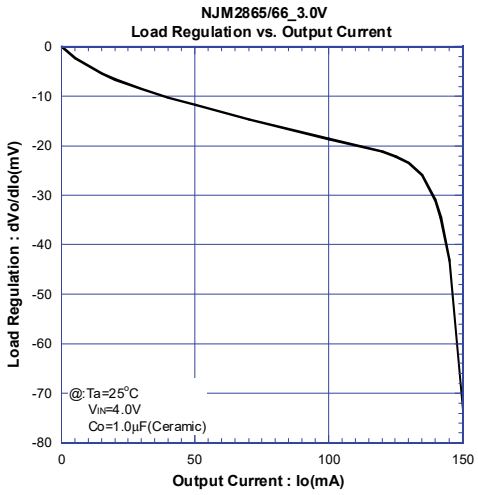

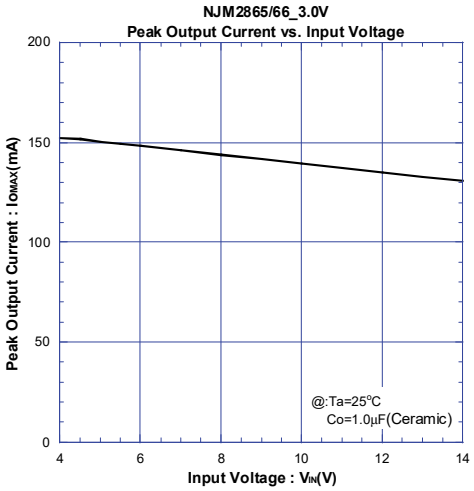

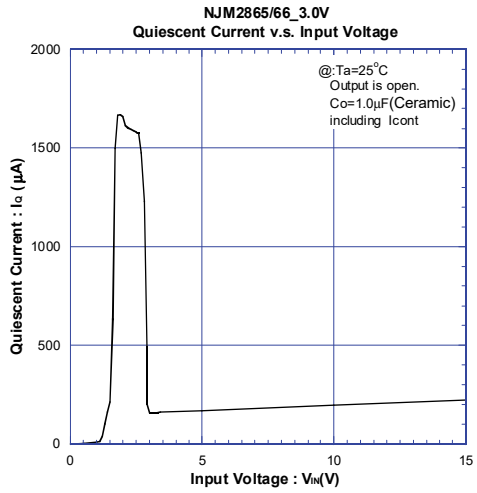

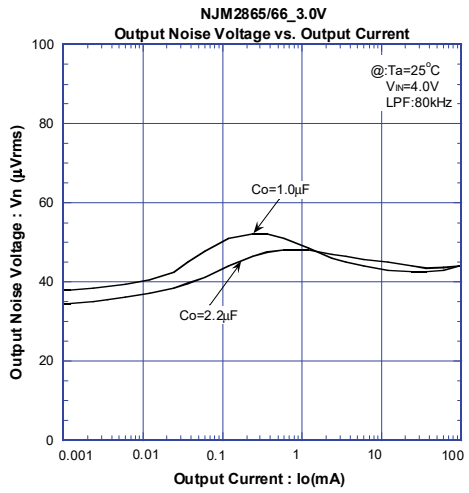

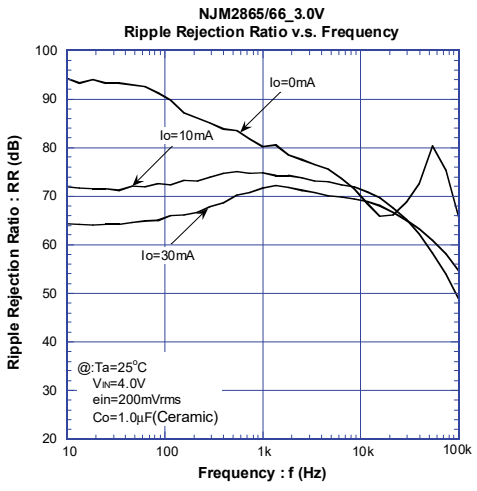

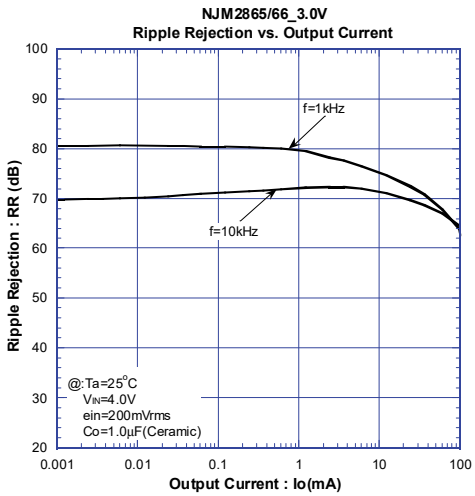

■ ELECTRICAL CHARACTERISTICS

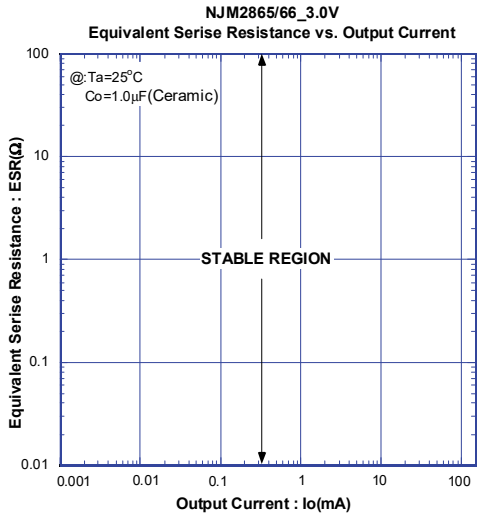

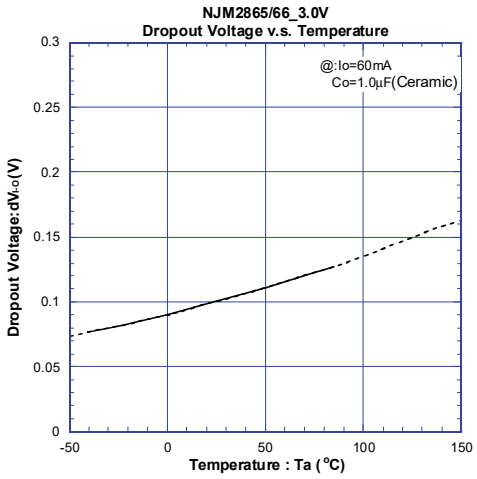

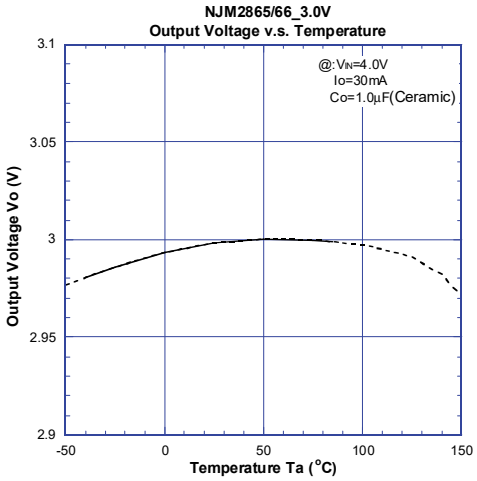

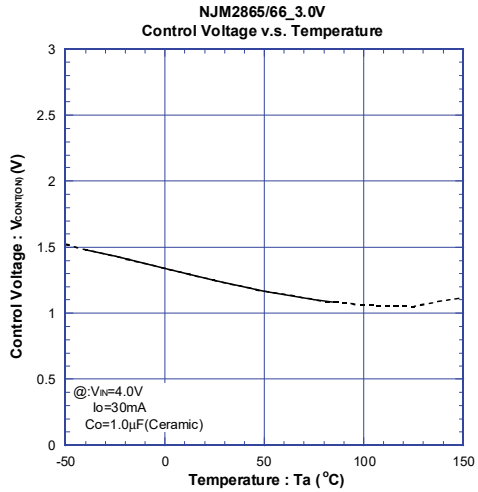

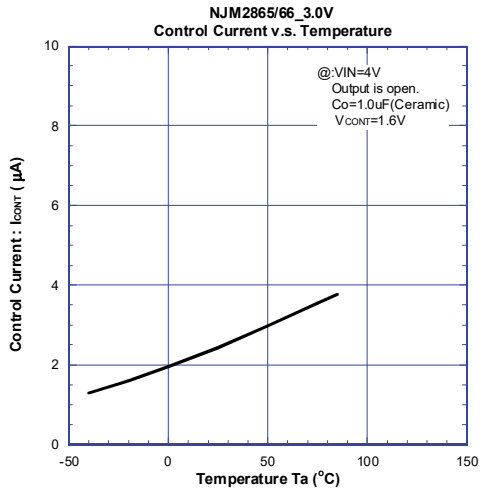

■ ELECTRICAL CHARACTERISTICS

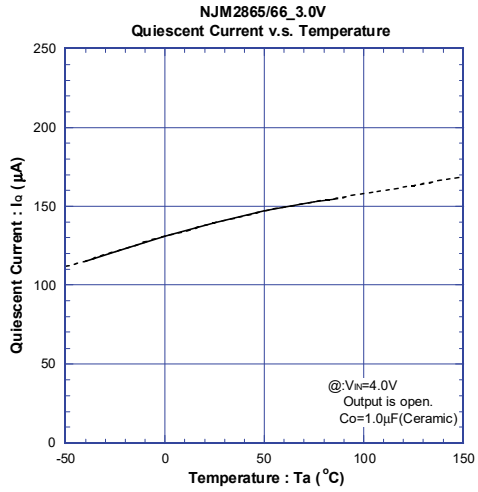

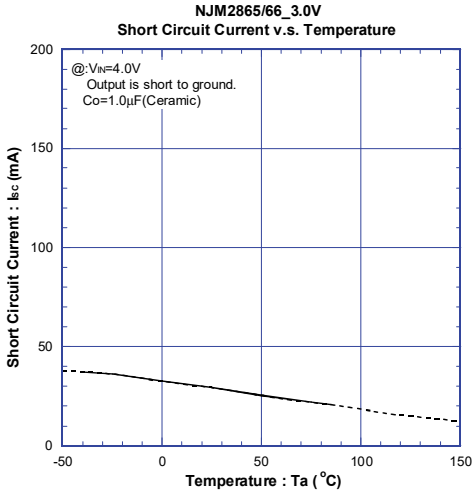

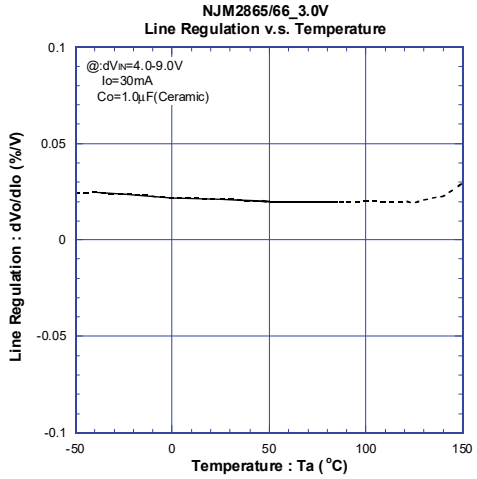

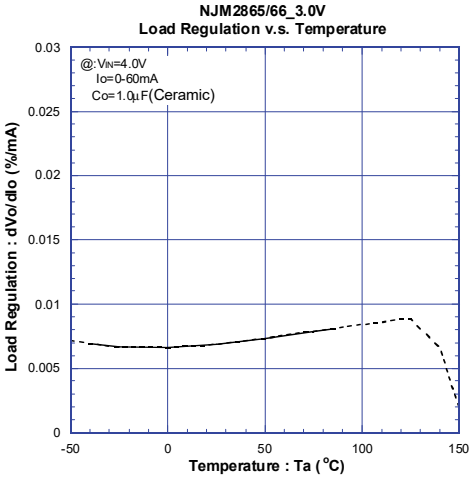

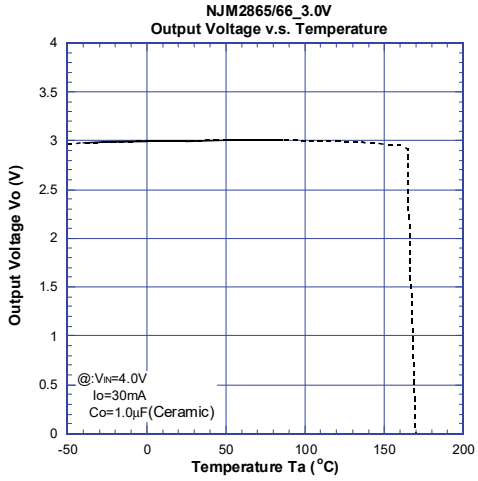

■ ELECTRICAL CHARACTERISTICS

NJM2865/66_3.0V
ON/OFF Transient Response

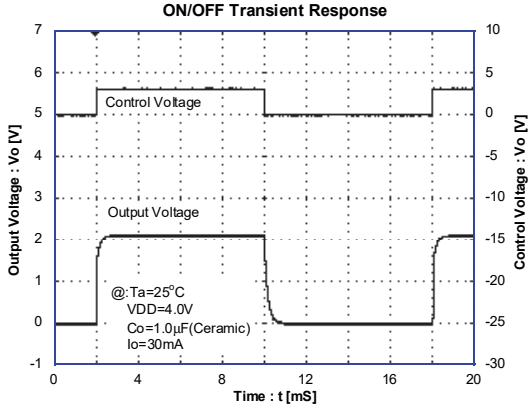

NJM2865/66_3.0V
ON/OFF Transient Response without load

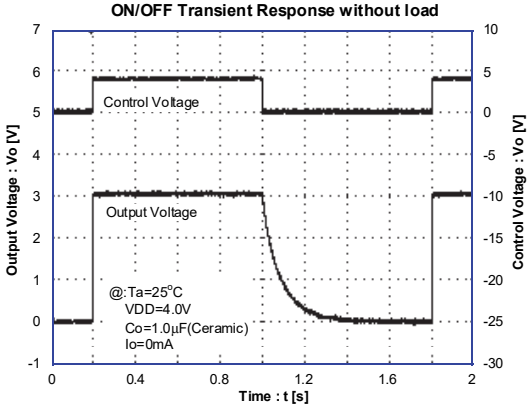

NJM2865/66_3.0V
Load Transient Response

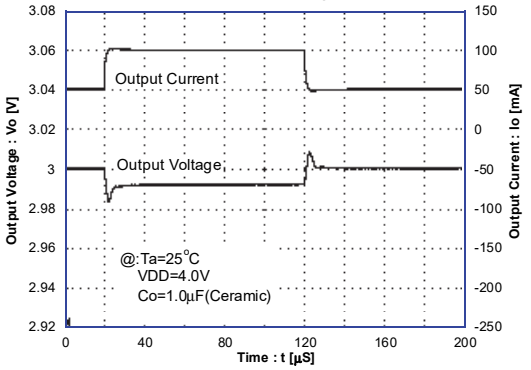

NJM2865/66_3.0V
Line Transient Response

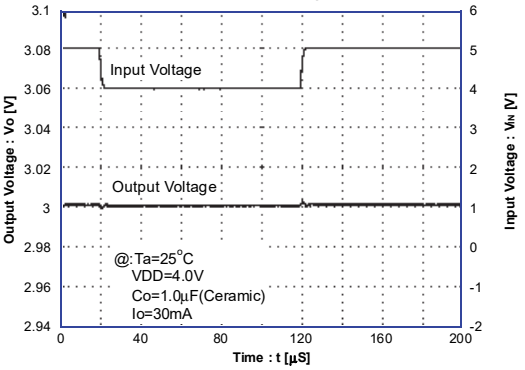

[CAUTION]
The specifications on this datasheet are only given for information , without any guarantee as regards either mistakes or omissions. The application circuits in this datasheet are described only to show representative usages of the product and not intended for the guarantee or permission of any right including the industrial rights.

ENTEGRECİ

Bu belge www.entegreci.com üzerinden sunulmaktadır.

Elektronik komponent tedarikinde Entegreci

Entegreci, Eskişehir merkezli, Türkiye geneline satış yapan bir elektronik komponent mağazasıdır. Entegreler (IC), mikrodenetleyiciler, transistörler, diyotlar, pasif elemanlar, konnektörler, modüller ve geliştirme kartları tek adetten seri üretim adetlerine kadar satılır. Ürün sayfalarında güncel stok durumunu, fiyatı ve datasheet bağlantısını bulabilirsiniz.

Parça koduyla arama

Üretici parça numarasını yazın; stok ve fiyatı hemen görün.

www.entegreci.com

Ürün kategorileri

Entegreden kapasitöre tüm elektronik komponent kategorileri.

Kategorilere göz atın

Üreticiler

Aradığınız üreticinin ürünlerini tek sayfada inceleyin.

Üreticileri görün

Toplu alım ve teklif

Listede olmayan ya da yüksek adetli parçalar için teklif isteyin.

Teklif isteyin

www.entegreci.com | **destek@entegreci.com** | **0850 305 90 34**

Entegreci is an online electronic components store based in Türkiye. Search by manufacturer part number to see stock, prices and datasheets for integrated circuits, microcontrollers, transistors, passive components and connectors, or request a quote for parts that are not listed.

Bu sayfa Entegreci tarafından eklenmiştir. Belgenin önceki sayfaları asıl yayıncısına aittir ve içeriği değiştirilmemiştir; en güncel sürüm için belgenin yayıncısına başvurun.