LOW DROPOUT VOLTAGE REGULATOR

■ GENERAL DESCRIPTION

The NJM2870 is low dropout voltage regulator designed for cellular phone application.

Advanced Bipolar technology achieves low noise, high ripple rejection and low quiescent current.

■ PACKAGE OUTLINE

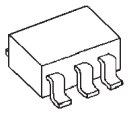

NJM2870F

■ FEATURES

●High Ripple Rejection	56dB ≤ RR (DC < f < 60kHz)
	66dB typ. (f=100Hz)
	60dB typ. (f=1kHz)
●Output Noise Voltage	Vno=30μV typ.(Cp=0.01μF)
●Output Current	Io(max.)=150mA
●High Precision Output	Vo±2%
●Low Dropout Voltage	ΔV_{I-O}=0.12V typ. (Io=60mA, Vo≥1.8V)
●Input Voltage range	+2~+14V (Vo=1.5V Version)
●ON/OFF Control	(Active High)

●Output capacitor with 4.7uF ceramic capacitor
●Internal Short Circuit Current Limit
●Internal Thermal Overload Protection
●Bipolar Technology
●Package Outline SOT-23-5

■ PIN CONFIGURATION

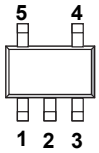

NJM2870F

PIN FUNCTION
1. CONTROL (Active High)
2. GND
3. NOISE BYPASS
4. V_{OUT}
5. V_{IN}

■ EQUIVALENT CIRCUIT

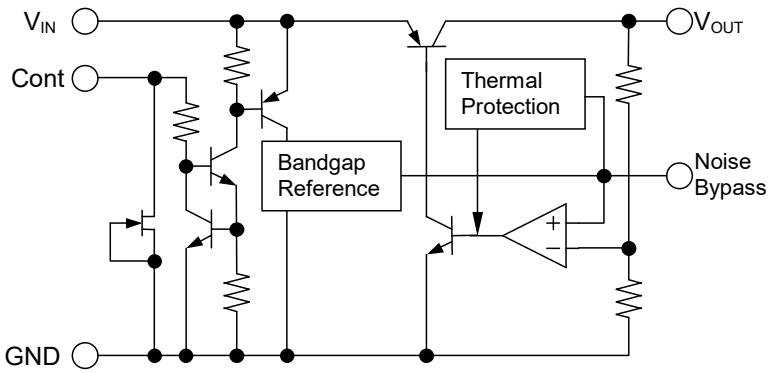

■ ABSOLUTE MAXIMUM RATINGS(Ta=25°C)

PARAMETER	SYMBOL	RATINGS		UNIT
Input Voltage	V_{IN}	+14		V
Control Voltage	V_{CONT}	+14(*1)		V
Power Dissipation	P_D	SOT-23-5	350(*2)	mW
			200(*3)	
Operating Temperature	Topr	–40 ~ +85		°C
Storage Temperature	Tstg	–40 ~ +125		°C

(*1) When input voltage is less than +14V, the absolute maximum control voltage is equal to the input voltage.
(*2): Mounted on glass epoxy board based on EIA/JEDEC. (114.3x76.2x1.6mm: 2Layers)
(*3): Device itself.

■ ELECTRICAL CHARACTERISTICS (V_{IN}=Vo+1V, C_{IN}=0.1µF, Co=4.7µF, Cp=0.01µF, Ta=25°C)

PARAMETER	SYMBOL	TEST CONDITION	MIN.	TYP.	MAX.	UNIT
Output Voltage	Vo	Io=30mA	–2%	–	+2%	V
Quiescent Current	I_Q	Io=0mA, expect Icont	–	200	300	µA
Quiescent Current at Control OFF	$I_{Q(OFF)}$	V_{CONT}=0V	–	–	100	nA
Output Current	Io	Vo–0.3V	150	200	–	mA
Line Regulation	$\Delta Vo/\Delta V_{IN}$	V_{IN}=Vo+1V ~ Vo+6V, Io=30mA	–	–	0.10	%/V
Load Regulation	$\Delta Vo/\Delta Io$	Io=0 ~ 100mA	–	–	0.03	%/mA
Dropout Voltage	ΔV_{I-O}	Io=60mA	–	0.12	0.2	V
Ripple Rejection	RR	ein=200mVrms,f=1kHz, Io=10mA V_{IN}=Vo+2V, Vo=3V Version	–	60	–	dB
Average Temperature Coefficient of Output Voltage	$\Delta Vo/\Delta Ta$	Ta=0~85°C, Io=10mA, Vo=3V Version	–	0.2	–	mV/°C
Output Noise Voltage	V_{NO}	f=10Hz~80kHz, Io=10mA, Vo=3V Version	–	30	–	µVrms
Control Voltage for ON-state	$V_{CONT(ON)}$		1.6	–	–	V
Control Voltage for OFF-state	$V_{CONT(OFF)}$		–	–	0.6	V

The above specification is a common specification for all output voltages.
Therefore, it may be different from the individual specification for a specific output voltage.

■ ELECTRICAL CHARACTERISTICS

(Vo=1.5V Version, V_{IN}=2.4V, C_{IN}=0.1µF, Co=4.7µF, Cp=0.01µF, Ta=25°C)

PARAMETER	SYMBOL	TEST CONDITION	MIN.	TYP.	MAX.	UNIT
Output Voltage	Vo	Io=30mA	–2%	–	+2%	V
Quiescent Current	I_Q	Io=0mA, expect Icont	–	200	300	µA
Quiescent Current at Control OFF	$I_{Q(OFF)}$	V_{CONT}=0V	–	–	100	nA
Output Current	Io	Vo–0.3V	150	200	–	mA
Line Regulation	$\Delta Vo/\Delta V_{IN}$	V_{IN}=Vo+1V ~ Vo+6V, Io=30mA	–	–	0.10	%/V
Load Regulation	$\Delta Vo/\Delta Io$	Io=0 ~ 100mA	–	–	0.03	%/mA
Ripple Rejection	RR	ein=200mVrms,f=1kHz, Io=10mA V_{IN}=Vo+2V	–	64	–	dB
Average Temperature Coefficient of Output Voltage	$\Delta Vo/\Delta Ta$	Ta=0~85°C, Io=10mA	–	0.13	–	mV/°C
Output Noise Voltage	V_{NO}	f=10Hz~80kHz, Io=10mA,	–	15	–	µVrms
Control Voltage for ON-state	$V_{CONT(ON)}$		1.6	–	–	V
Control Voltage for OFF-state	$V_{CONT(OFF)}$		–	–	0.6	V

■ OUTPUT VOLTAGE RANK LIST

Device Name	V_{OUT}
NJM2870F15	1.5V
NJM2870F18	1.8V
NJM2870F19	1.9V
NJM2870F02	2.0V
NJM2870F21	2.1V
NJM2870F23	2.3V
NJM2870F24	2.4V
NJM2870F25	2.5V
NJM2870F26	2.6V

Device Name	V_{OUT}
NJM2870F27	2.7V
NJM2870F28	2.8V
NJM2870F285	2.85V
NJM2870F29	2.9V
NJM2870F03	3.0V
NJM2870F31	3.1V
NJM2870F32	3.2V
NJM2870F33	3.3V
NJM2870F34	3.4V

Device Name	V_{OUT}
NJM2870F35	3.5V
NJM2870F36	3.6V
NJM2870F38	3.8V
NJM2870F04	4.0V
NJM2870F45	4.5V
NJM2870F46	4.6V
NJM2870F47	4.7V
NJM2870F48	4.8V
NJM2870F05	5.0V

■ TEST CIRCUIT

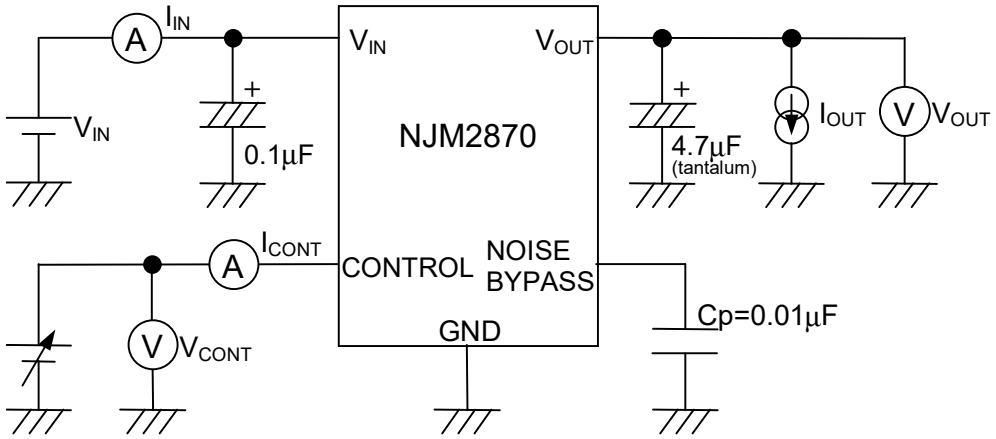

■ TYPICAL APPLICATION

① In case that ON/OFF Control is not required:

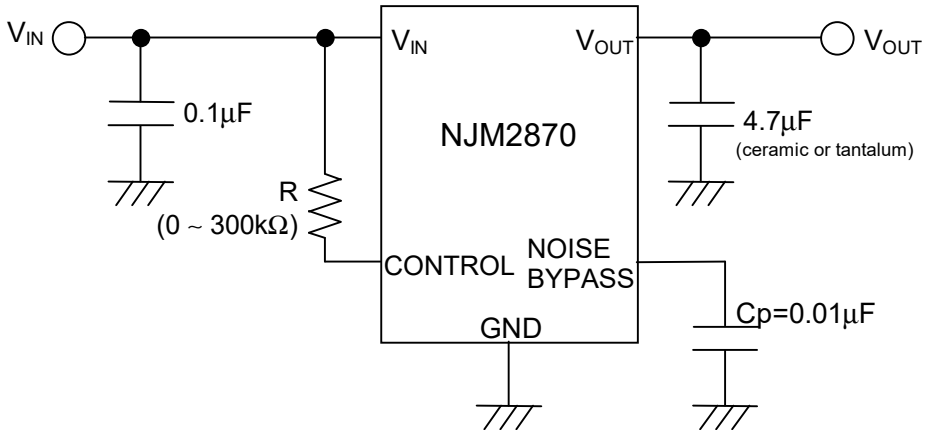

Connect control terminal to V_{IN} terminal

② In use of ON/OFF CONTROL:

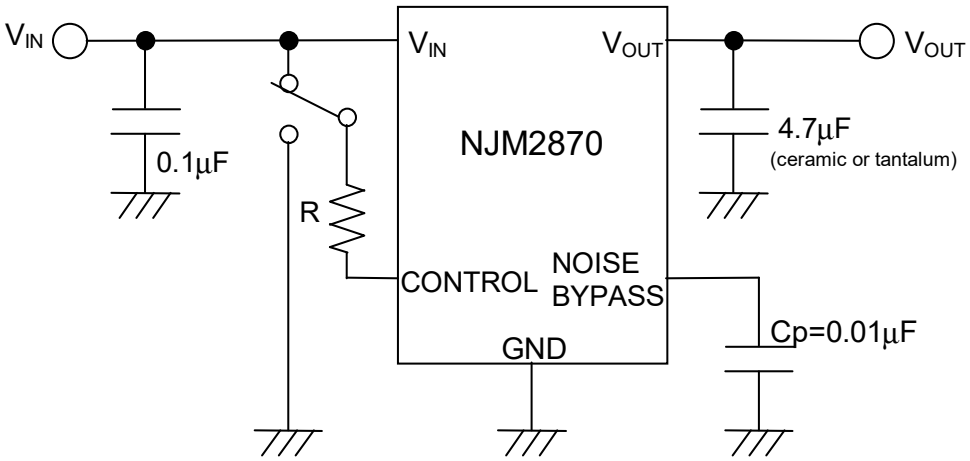

State of control terminal:

- "H"→ output is enabled.
- "L" or "open" → output is disabled.

∗Noise bypass Capacitance Cp

Noise bypass capacitance Cp reduces noise generated by band-gap reference circuit. Noise level and ripple rejection will be improved when larger Cp is used. Use of smaller Cp value may cause oscillation. Use the Cp value of 0.01µF greater to avoid the problem.

∗In the case of using a resistance "R" between V_{IN} and control.

The current flow into the control terminal while the IC is ON state (I_{CONT}) can be reduced when a pull up resistance "R" is inserted between V_{IN} and the control terminal.

The minimum control voltage for ON state ($V_{CONT\ (ON)}$) is increased due to the voltage drop caused by I_{CONT} and the resistance "R". The I_{CONT} is temperature dependence as shown in the "Control Current vs. Temperature" characteristics. Therefore, the resistance "R" should be carefully selected to ensure the control voltage exceeds the $V_{CONT\ (ON)}$ over the required temperature range.

■ POWER DISSIPATION vs. AMBIENT TEMPERATURE

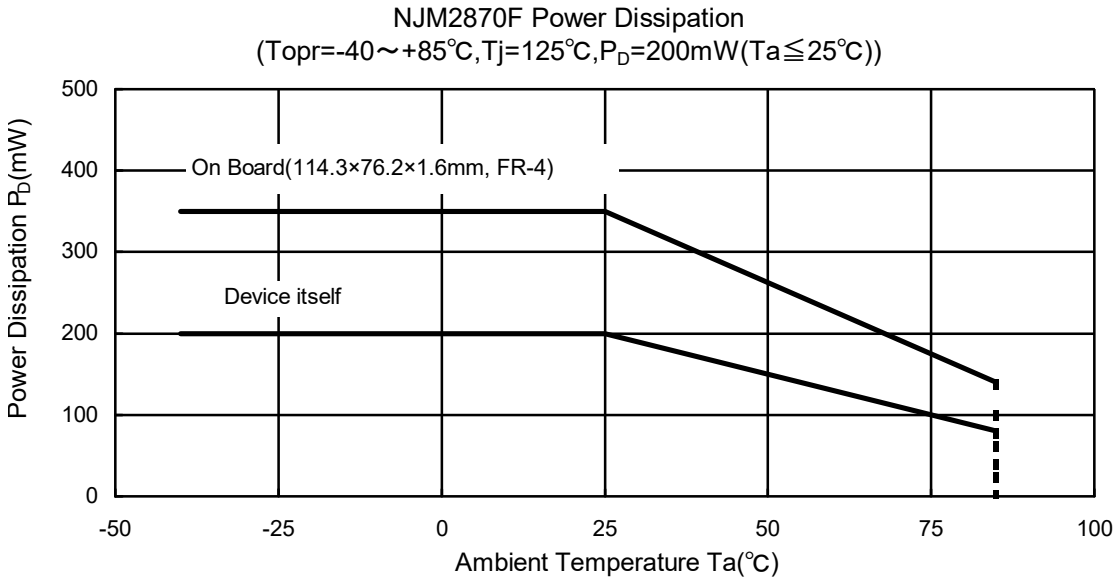

■ TYPICAL CHARACTERISTICS

NJM2870_3.0V
Output Voltage vs. Input Voltage

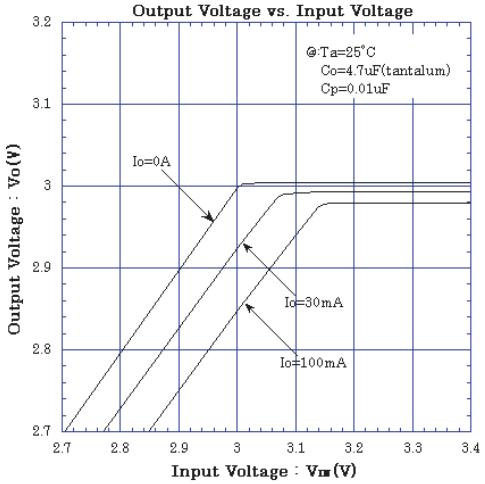

NJM2870_3.0V
Output Voltage vs. Output Current

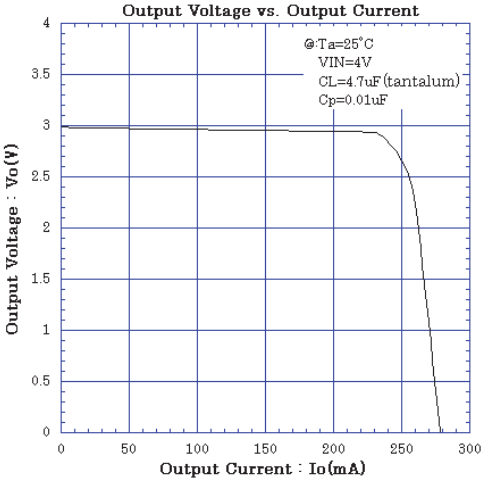

NJM2870_3.0V
Ground Pin Current vs. Output Current

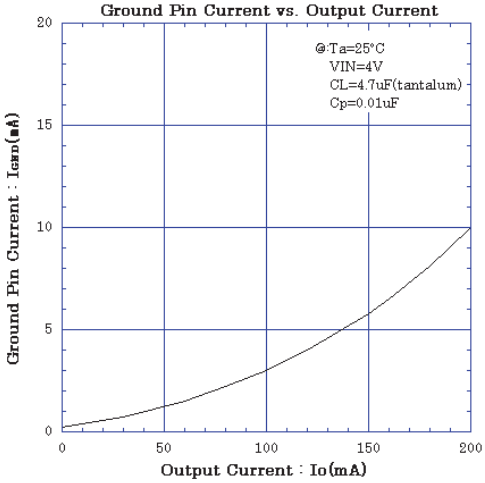

NJM2870_3.0V
Dropout Voltage vs. Output Current

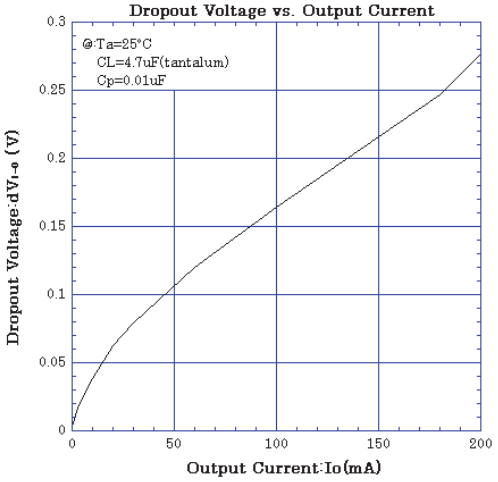

NJM2870_3.0V
Control Current vs. Control Voltage

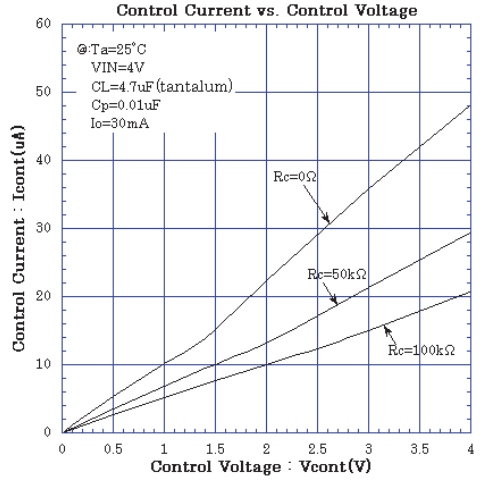

NJM2870_3.0V
Output Voltage vs. Control Voltage

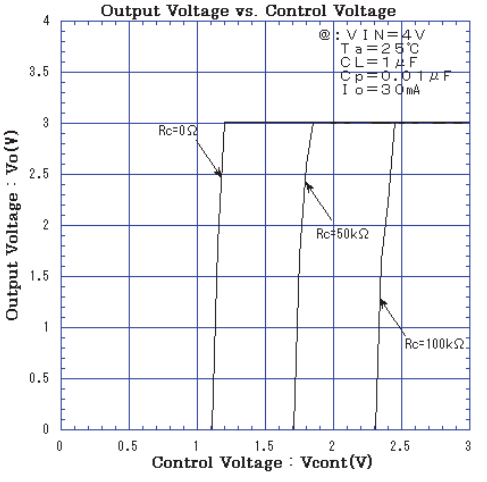

■ TYPICAL CHARACTERISTICS

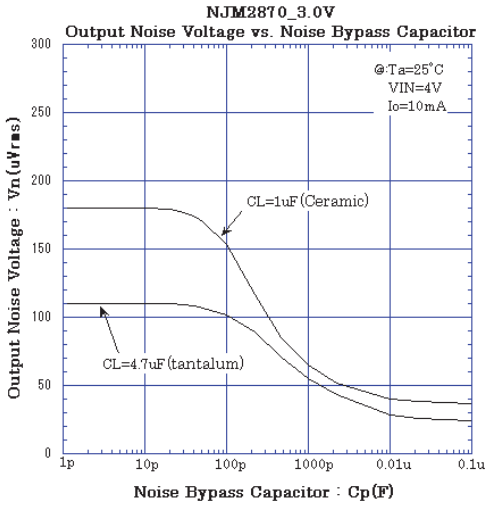

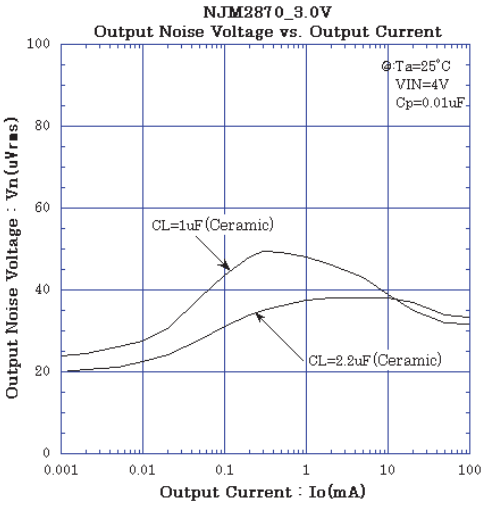

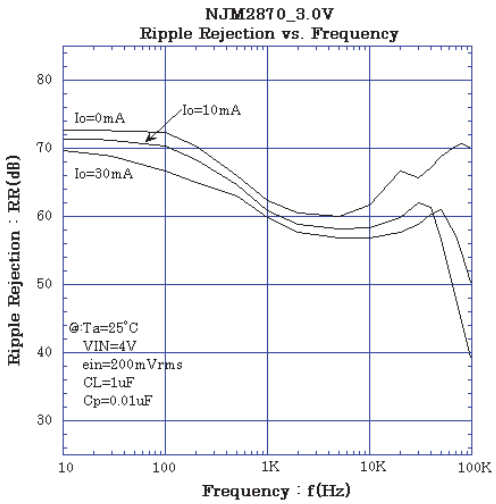

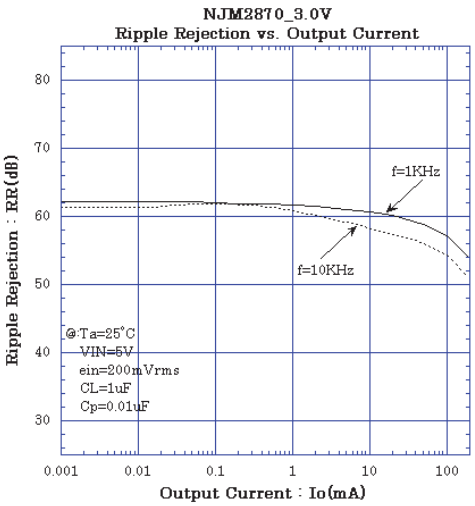

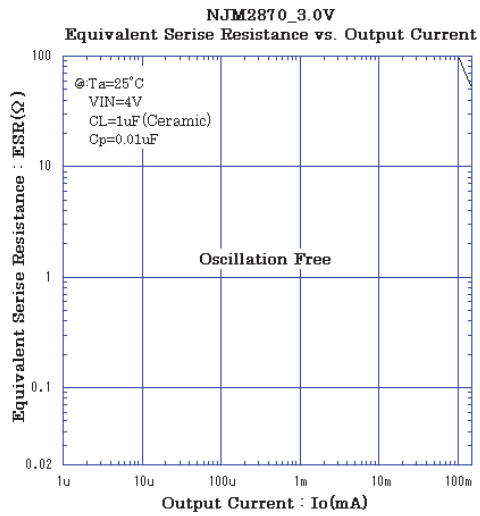

■ TYPICAL CHARACTERISTICS

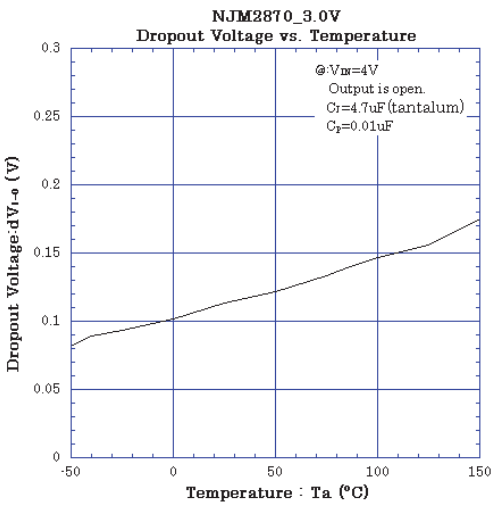

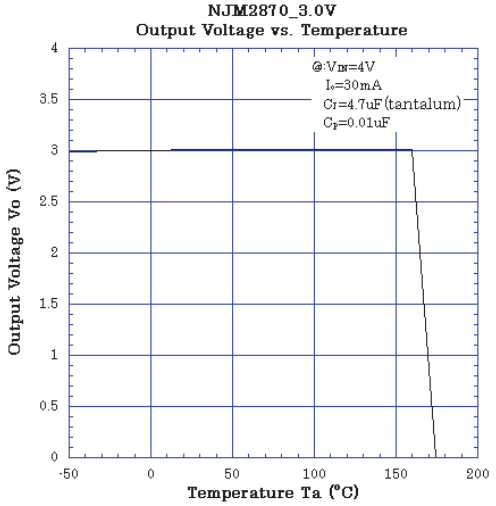

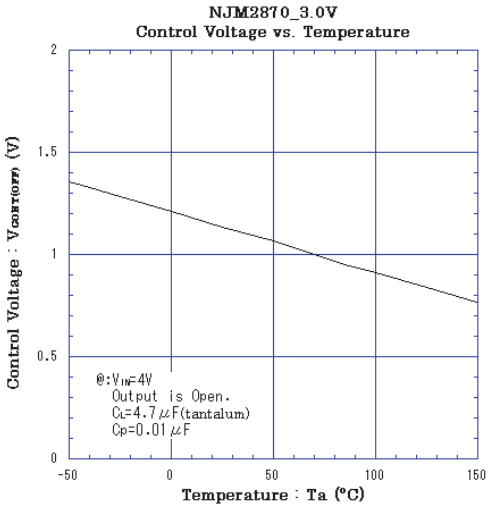

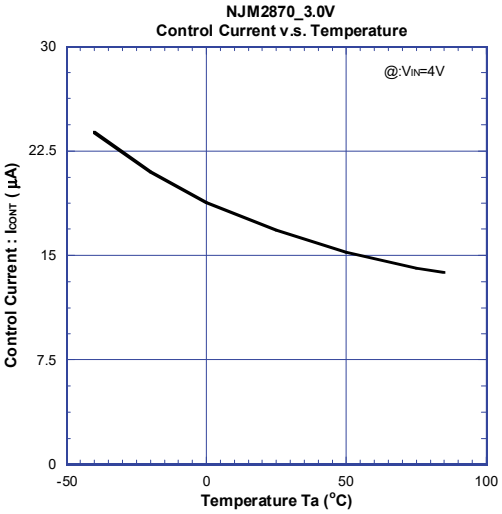

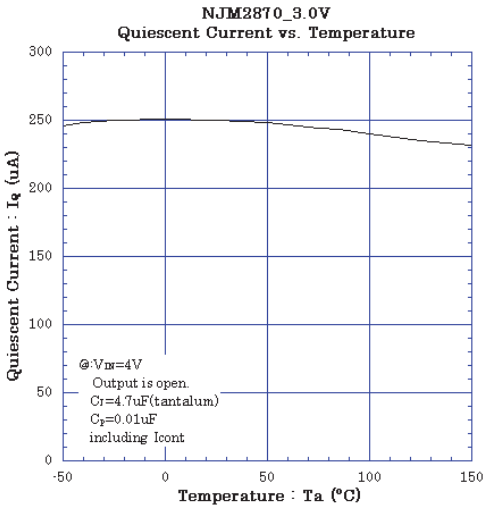

[CAUTION]
The specifications on this datasheet are only given for information , without any guarantee as regards either mistakes or omissions. The application circuits in this datasheet are described only to show representative usages of the product and not intended for the guarantee or permission of any right including the industrial rights.

ENTEGRECİ

Bu belge www.entegreci.com üzerinden sunulmaktadır.

Elektronik komponent tedarikinde Entegreci

Entegreci, Eskişehir merkezli, Türkiye geneline satış yapan bir elektronik komponent mağazasıdır. Entegreler (IC), mikrodenetleyiciler, transistörler, diyotlar, pasif elemanlar, konnektörler, modüller ve geliştirme kartları tek adetten seri üretim adetlerine kadar satılır. Ürün sayfalarında güncel stok durumunu, fiyatı ve datasheet bağlantısını bulabilirsiniz.

Parça koduyla arama

Üretici parça numarasını yazın; stok ve fiyatı hemen görün.

www.entegreci.com

Ürün kategorileri

Entegreden kapasitöre tüm elektronik komponent kategorileri.

Kategorilere göz atın

Üreticiler

Aradığınız üreticinin ürünlerini tek sayfada inceleyin.

Üreticileri görün

Toplu alım ve teklif

Listede olmayan ya da yüksek adetli parçalar için teklif isteyin.

Teklif isteyin

www.entegreci.com | **destek@entegreci.com** | **0850 305 90 34**

Entegreci is an online electronic components store based in Türkiye. Search by manufacturer part number to see stock, prices and datasheets for integrated circuits, microcontrollers, transistors, passive components and connectors, or request a quote for parts that are not listed.

Bu sayfa Entegreci tarafından eklenmiştir. Belgenin önceki sayfaları asıl yayıncısına aittir ve içeriği değiştirilmemiştir; en güncel sürüm için belgenin yayıncısına başvurun.