SERIES REGULATOR WITH RESET FUNCTION

■ GENERAL DESCRIPTION

The **NJM78LR05** is a series regulator with reset function.

In case of shut down or output voltage drop, the IC generates reset signal to a microcomputer.

That is suitable for items with microcomputer, such as TV sets, remote controller, refrigerator and others.

■ PACKAGE OUTLINE

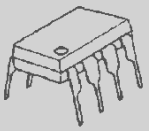

NJM78LR05BD / CD
NRND (DIP8)



NJM78LR05BM / CM / DM

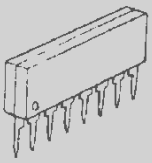

NJM78LR05BL / CL
DISCONTINUED (SIP8)



NJM78LR05BU / CU / DU

■ FEATURES

- Output Current I_O=150mA max.
- Reset Function Including
- Reset Delay Time can be Adjusted by an External Capacitance.
- Internal Over Current Protection
- Thermal Shut Down
- Bipolar Technology
- package Outline DIP8, DMP8, SIP8, SOT-89 (5Pin)

■ RESET THRESHOLD VOLTAGE LINE-UP

Reset Threshold Voltage	Version	Part Number
4.0V	D	NJM78LR05DX
4.2V	C	NJM78LR05CX
4.3V	B	NJM78LR05BX

"X" is package suffix.

■ BLOCK DIAGRAM

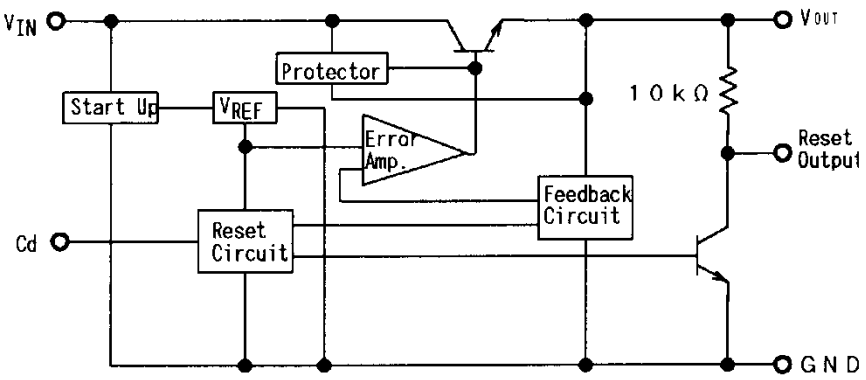

■ PIN CONFIGURATION

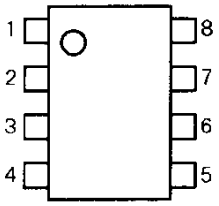

NJM78LR05BD / CD
NJM78LR05BM / CM / DM

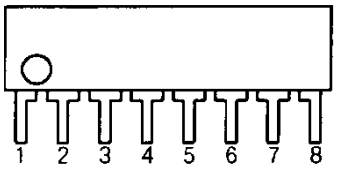

NJM78LR05BL / CL

PIN FUNCTION
1. INPUT
2. NC
3. Cd
4. NC
5. GND
6. RESET-OUTPUT
7. NC
8. OUTPUT

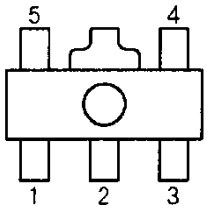

NJM78LR05BU / CU / DU

PIN FUNCTION
1. Cd
2. GND
3. RESET-OUTPUT
4. OUTPUT
5. INPUT

■ ABSOLUTE MAXIMUM RATINGS

(T_a=25°C)

PARAMETER	SYMBOL	MAXIMUM RATINGS	UNIT
Input Voltage	V_{IN}	+20	V
Power Dissipation	P_D	(DIP-8) 500 (DMP8) 500* (SIP8) 800 (SOT-89) 350	mW
Operating Temperature Range	T_{opr}	-40 to +85	°C
Storage Temperature Range	T_{stg}	-50 to +150	°C

*At on PC board.

■ RECOMMENDED OPERATING CONDITIONS

(T_a=25°C)

PARAMETER	SYMBOL	CONDITIONS	UNIT
Input Voltage	V_{IN}	7.5 to 18	V
Output Current	I_O	1 to 100	mA

■ ELECTRICAL CHARACTERISTICS

(V_{IN}=10V, I_O=40mA, C_{IN}=1µF, C_O=10µF, T_a=25°C)

[Power Supply Block]

PARAMETER	SYMBOL	CONDITIONS	MIN.	TYP.	MAX.	UNIT
Output Voltage	V_O	I_O=1mA	4.80	5.00	5.20	V
Quiescent Current	I_Q	I_O=100mA	-	1.40	3.40	mA
Output Short Current	I_{OSC}	OUTPUT-GND short	150	300	450	mA
Line Regulation 1	ΔV_O / $V_{IN}1$	7V ≤ V_{IN} ≤ 18V	-	6.0	65.0	mV
Line Regulation 2	ΔV_O / $V_{IN}2$	8V ≤ V_{IN} ≤ 18V	-	3.0	42.0	mV
Load Regulation 1	ΔV_O / I_O1	I_O=1 to 100mA	-	9.0	60.0	mV
Load Regulation 2	ΔV_O / I_O2	I_O=1 to 40mA	-	3.0	30.0	mV
Ripple Rejection	RR	f=120Hz, e_{in}=1V_{P-P}, V_{IN}=8 to 18V	-	79	-	dB
Output Noise Voltage	V_{NO}	10Hz ≤ f ≤ 100kHz, I_O=1mA	-	80	-	µV
Dropout Voltage	ΔV_{I-O}		-	1.5	2.2	V
[Reset Block]						
(H) Reset Output Voltage	V_{ORH}		4.80	5.00	5.20	V
(L) Reset Output Voltage	V_{ORL}	V_{IN}=3V, I_O=1mA	-	10	200	mV
Reset Threshold Voltage	V_{RT}	B Version	4.12	4.30	4.48	V
		C Version	4.03	4.20	4.37	
		D Version	3.84	4.00	4.16	
Reset Threshold Hysteresis Voltage	V_{RTH}		50	100	200	mV
Reset Output Delay Time	td	Cd=0.1µF	7.50	10.0	12.5	ms

■ APPLICATION CIRCUIT

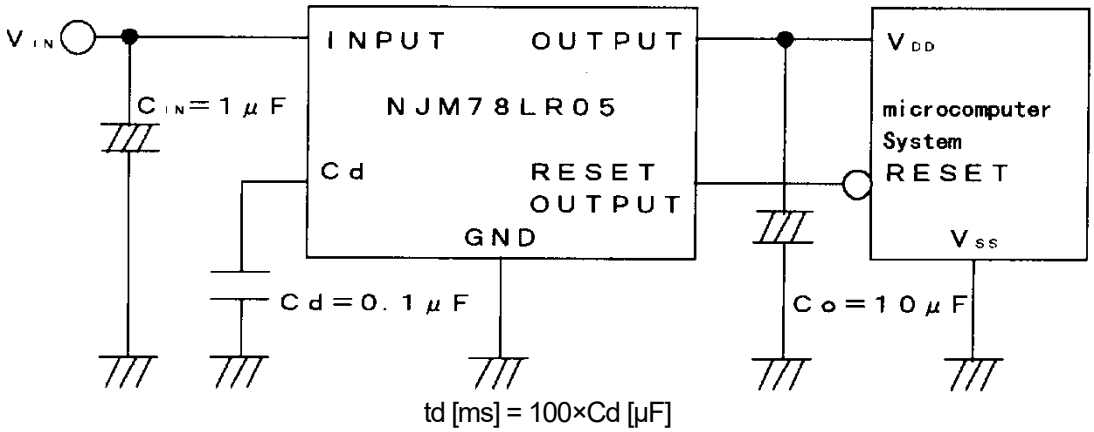

td [ms] = 100×Cd [μF]

Note 1 : When the capacitance Cd is too large, the actual delay time is shorter than the calculated result because an electrical charge of Cd is discharged incompletely.
Solution of above problem :
(1) Connect SBD between output terminal and Cd terminal. Please refer to the fallowing circuit.
(2) Select larger capacitance, C_{IN} than Cd.

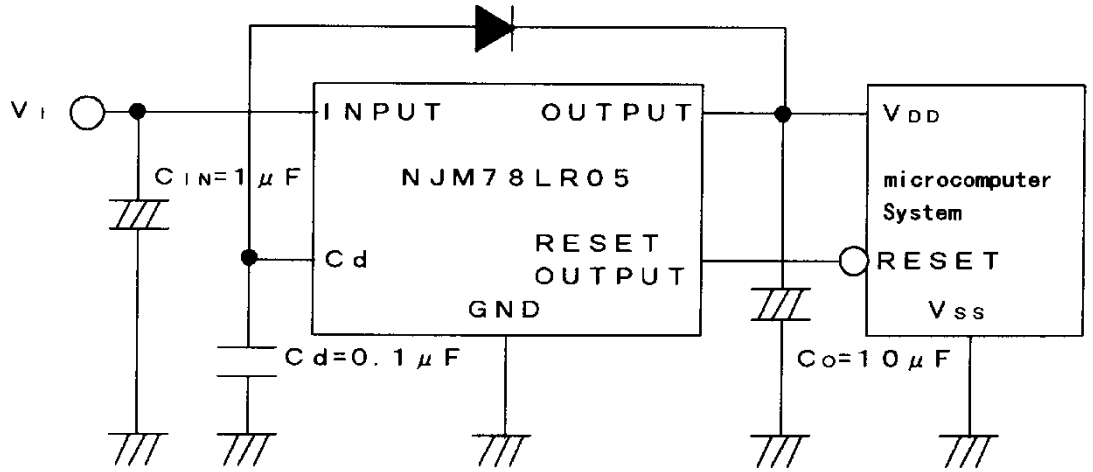

■ TIMING CHART

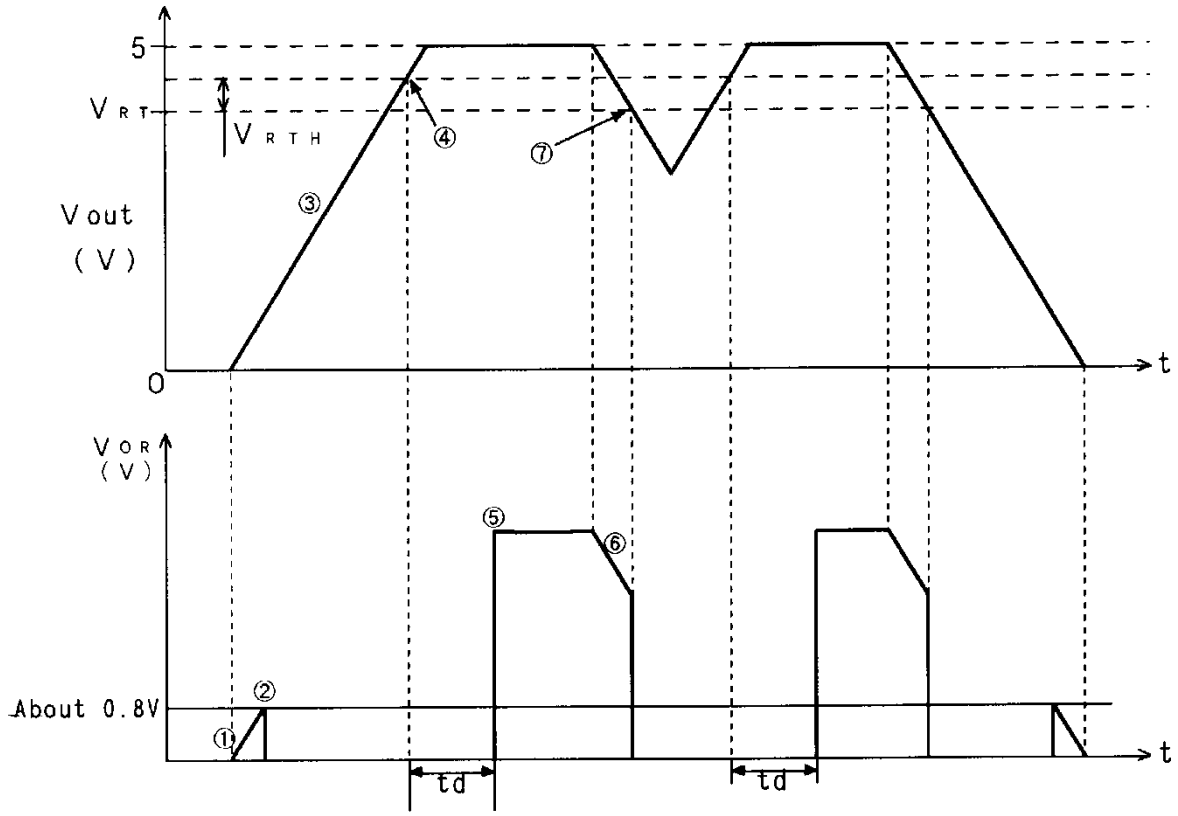

①When the input voltage is up to about 0.8V, some voltage is outputted at the reset output because the **NJM78LR05** operation is unstable.
②When the input voltage goes over about 0.8V, the reset output becomes “L”.
③The output voltage is rising up with the input voltage.
④When the output voltage goes over (V_{RT}+V_{RTH}), the delay circuit of reset output activates.
V_{RT} : Reset Threshold Voltage
V_{RTH} : Reset Threshold Hysterisis Voltage
⑤After the reset output delay time td has passed, the reset output becomes “H”.
⑥The output voltage is falling down with the input voltage.
⑦When the output voltage is less than V_{RT}, the reset output becomes “L”.

■ TYPICAL CHARACTERISTICS

Reset Output Voltage vs. Output Voltage

(I_O=40mA,Ta=25℃)

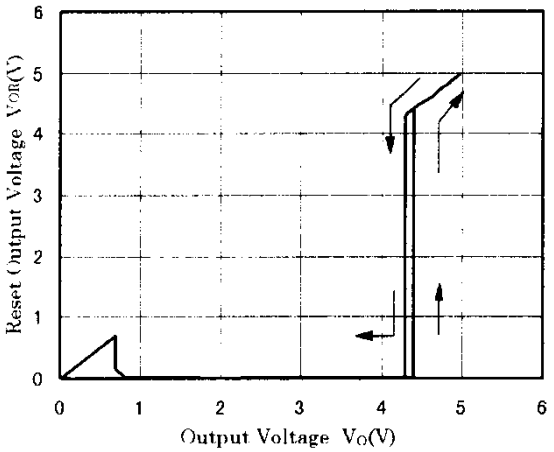

Line Regulation

(Ta=25℃)

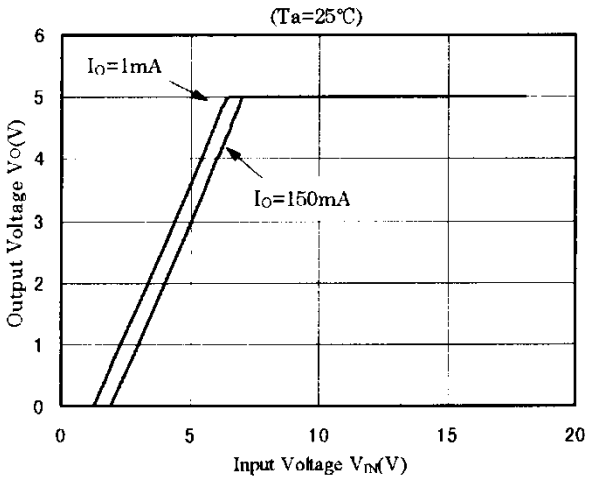

Load Regulation

(V_{IN}=10V,Ta=25℃)

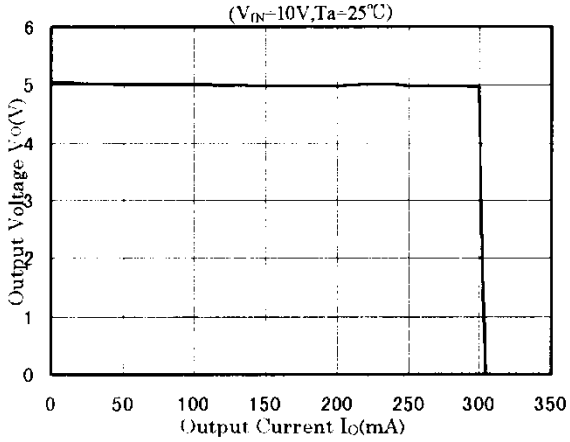

Dropout Voltage

(Ta=25℃)

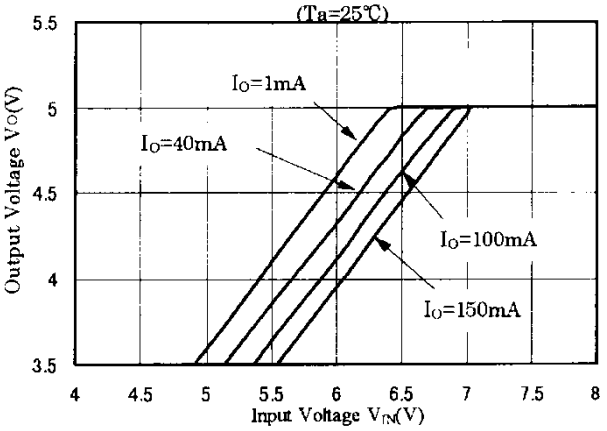

Quiescent Current vs. Input Voltage

(I_O=0mA,Ta=25℃)

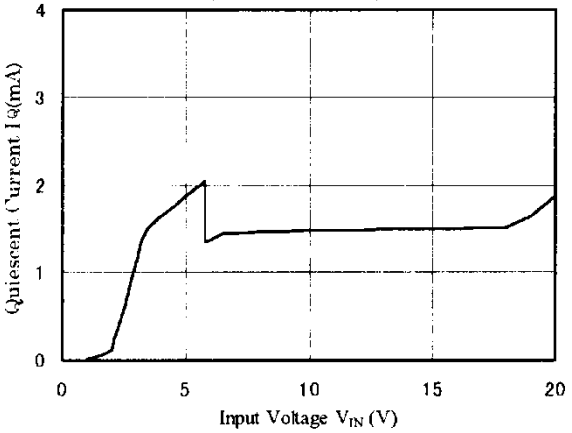

Output Short Current vs. Input Voltage

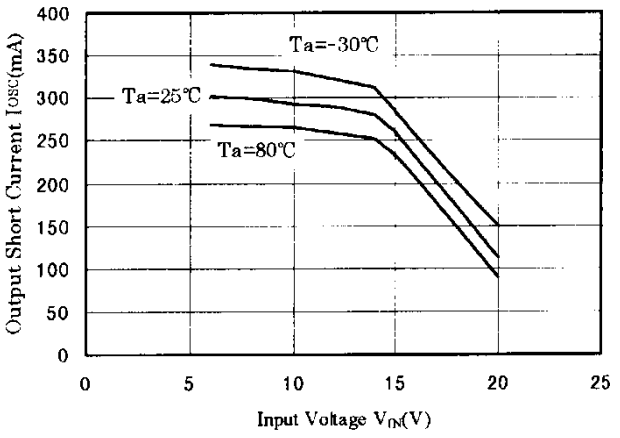

■ TYPICAL CHARACTERISTICS

Reset Output Delay Time vs. Reset Output Delay Capacitance

(V_{IN}=10V, I_O=40mA, Ta=25°C)

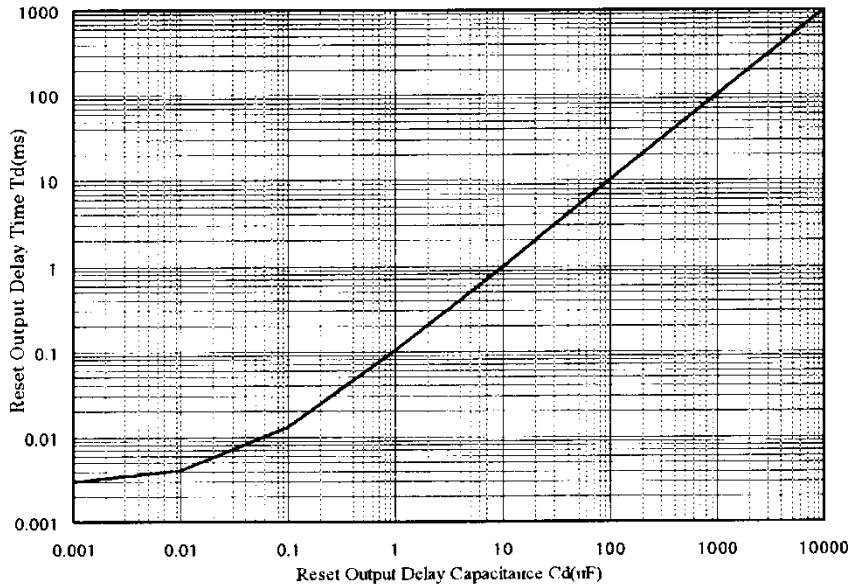

Ripple Rejection vs. Frequency

(V_{IN}=10V, I_O=40mA, ein=1V_{P-P}, C_O=10μF, Ta=25°C)

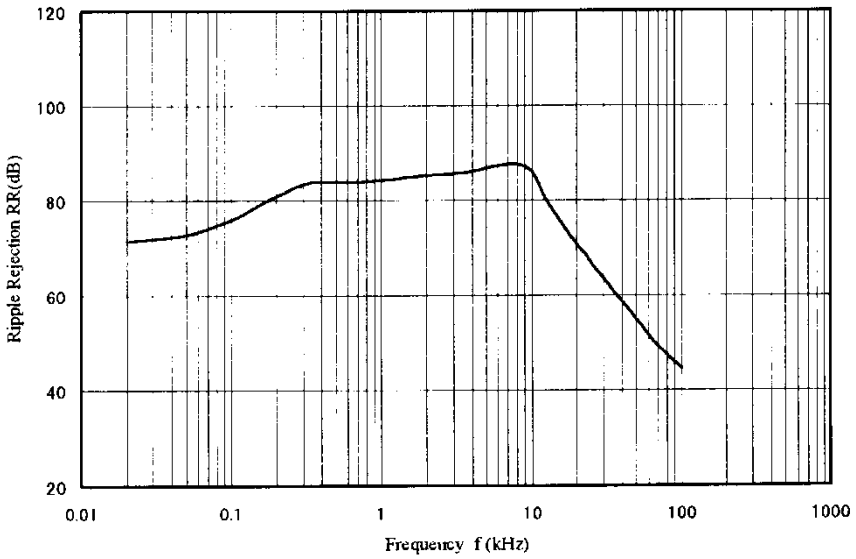

■ TYPICAL CHARACTERISTICS

Thermal Shutdown

(V_{IN}=10V,I_O=0mA)

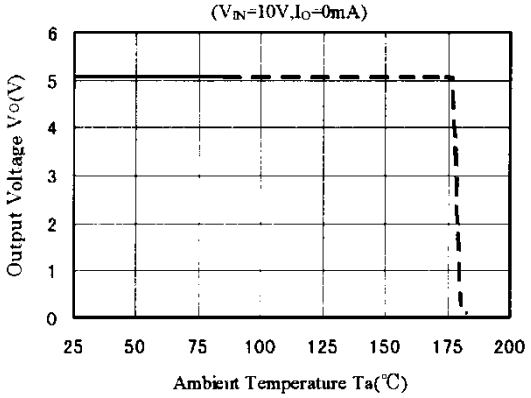

Output Voltage vs. Ambient Temperature

(V_{IN}=10V,I_O=10mA)

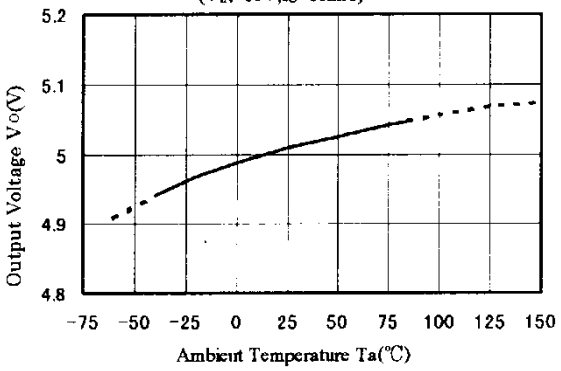

Reset Output Voltage vs. Reset Sink Current

(V_{IN}=10V,I_O=5mA,Ta=25℃)

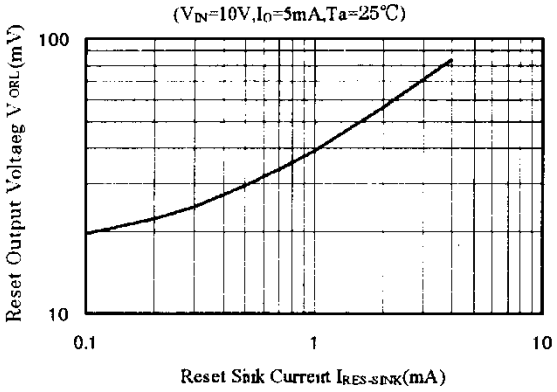

[CAUTION]
The specifications on this databook are only given for information , without any guarantee as regards either mistakes or omissions. The application circuits in this databook are described only to show representative usages of the product and not intended for the guarantee or permission of any right including the industrial rights.

ENTEGRECİ

Bu belge www.entegreci.com üzerinden sunulmaktadır.

Elektronik komponent tedarikinde Entegreci

Entegreci, Eskişehir merkezli, Türkiye geneline satış yapan bir elektronik komponent mağazasıdır. Entegreler (IC), mikrodenetleyiciler, transistörler, diyotlar, pasif elemanlar, konnektörler, modüller ve geliştirme kartları tek adetten seri üretim adetlerine kadar satılır. Ürün sayfalarında güncel stok durumunu, fiyatı ve datasheet bağlantısını bulabilirsiniz.

Parça koduyla arama

Üretici parça numarasını yazın; stok ve fiyatı hemen görün.

www.entegreci.com

Ürün kategorileri

Entegreden kapasitöre tüm elektronik komponent kategorileri.

Kategorilere göz atın

Üreticiler

Aradığınız üreticinin ürünlerini tek sayfada inceleyin.

Üreticileri görün

Toplu alım ve teklif

Listede olmayan ya da yüksek adetli parçalar için teklif isteyin.

Teklif isteyin

www.entegreci.com | **destek@entegreci.com** | **0850 305 90 34**

Entegreci is an online electronic components store based in Türkiye. Search by manufacturer part number to see stock, prices and datasheets for integrated circuits, microcontrollers, transistors, passive components and connectors, or request a quote for parts that are not listed.

Bu sayfa Entegreci tarafından eklenmiştir. Belgenin önceki sayfaları asıl yayıncısına aittir ve içeriği değiştirilmemiştir; en güncel sürüm için belgenin yayıncısına başvurun.