High Precision C-MOS 3-Terminal Voltage Regulator

GENERAL DESCRIPTION

The NJU7231 is high precision output voltage 3-terminal positive voltage regulator.

The NJU7231 is suitable for battery operated items and battery back-up systems, because of low operating current and low dropout voltage.

PACKAGE OUTLINE



NJU7231U

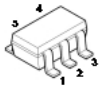

NJU7231F

FEATURES

High Precision Output	Vo±2%
Low Operating Current	10uA typ.
Low Dropout Voltage	ΔV_{I-O}<0.6V @Io=40mA
Wide Operating Voltage Range	
Package Outline	SOT-89/SOT-23(MTP-5)
Bipolar Technology	

OUTPUT VOLTAGE RANK LIST

Output Voltage	SOT-89	SOT-23
+1.2V	NJU7231U12	NJU7231F12
+1.5V	NJU7231U15	NJU7231F15
+1.8V	NJU7231U18	NJU7231F18
+2.5V	NJU7231U25	NJU7231F25
+2.6V	NJU7231U26	NJU7231F26
+2.7V	NJU7231U27	NJU7231F27
+2.8V	NJU7231U28	NJU7231F28
+2.9V	NJU7231U29	NJU7231F29
+3.0V	NJU7231U30	NJU7231F30
+3.3V	NJU7231U33	NJU7231F33
+5.0V	NJU7231U50	NJU7231F50
+5.2V	NJU7231U52	NJU7231F52

TERMINAL DESCRIPTION

No.	Description	
	SOT-89	SOT-23
1	GND	GND
2	INPUT	INPUT
3	OUTPUT	OUTPUT
4	-	NC
5	-	NC

EQUIVALENT CIRCUIT

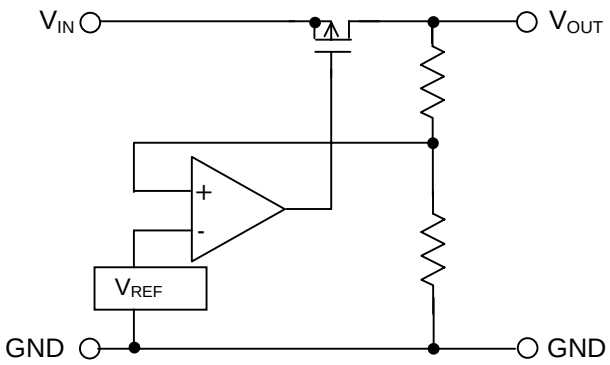

ABSOLUTE MAXIMUM RATING

(Ta=25°C)

PARAMETER	SYMBOL	RATINGS	UNIT
Input Voltage	V_{IN}	18	V
Output Voltage	V_{OUT}	GND-0.3 ~ V_{IN}+0.3	V
Output Current	I_{OUT}	100	mA
Power Dissipation	P_D	300 (SOT-89) 200 (MTP-5)	mW
Operating Temperature	Topr	- 40 ~ + 85	°C
Storage Temperature	Tstg	- 55 ~ +125	°C

ELECTRICAL CHARACTERISTICS

+1.2V Version (C_{IN}=C_O=0.1uF, Ta=25°C)

PARAMETER	SYMBOL	CONDITION	MIN	TYP	MAX	UNIT	CIRCUIT
Output Voltage	V_{OUT}	V_{IN}=3.0V, I_{OUT}=5mA	1.176	1.200	1.224	V	1
Dropout Voltage	ΔV_{IO}	I_{OUT}=0.5mA	-	0.02	0.3	V	1
Input Voltage	V_{IN}		-	-	15	V	2
Operating Current	I_Q	V_{IN}=3.0V	-	10	20	uA	2
Load Regulation	$\Delta V_{OUT}/\Delta I_{OUT}$	V_{IN}=3.0V, I_{OUT}=1~15mA	-	10	180	mV	3
Line Regulation	$\Delta V_{OUT}/(\Delta V_{IN} \cdot V_{OUT})$	V_{IN}=1.5~12.0V	-	0.1	-	%/V	3

+1.5V Version (C_{IN}=C_O=0.1uF, Ta=25°C)

PARAMETER	SYMBOL	CONDITION	MIN	TYP	MAX	UNIT	CIRCUIT
Output Voltage	V_{OUT}	V_{IN}=3.0V, I_{OUT}=5mA	1.470	1.500	1.530	V	1
Dropout Voltage	ΔV_{IO}	I_{OUT}=0.5mA	-	0.02	0.30	V	1
Input Voltage	V_{IN}		-	-	15	V	2
Operating Current	I_Q	V_{IN}=3.0V	-	10	20	uA	2
Load Regulation	$\Delta V_{OUT}/\Delta I_{OUT}$	V_{IN}=3.0V, I_{OUT}=1~15mA	-	10	180	mV	3
Line Regulation	$\Delta V_{OUT}/(\Delta V_{IN} \cdot V_{OUT})$	V_{IN}=1.5~12.0V	-	0.1	-	%/V	3

+1.8V Version (C_{IN}=C_O=0.1uF, Ta=25°C)

PARAMETER	SYMBOL	CONDITION	MIN	TYP	MAX	UNIT	CIRCUIT
Output Voltage	V_{OUT}	V_{IN}=3.0V, I_{OUT}=5mA	1.764	1.800	1.836	V	1
Dropout Voltage	ΔV_{IO}	I_{OUT}=0.5mA	-	0.02	0.30	V	1
Input Voltage	V_{IN}		-	-	15	V	2
Operating Current	I_Q	V_{IN}=3.0V	-	10	20	uA	2
Load Regulation	$\Delta V_{OUT}/\Delta I_{OUT}$	V_{IN}=3.0V, I_{OUT}=1~15mA	-	10	180	mV	3
Line Regulation	$\Delta V_{OUT}/(\Delta V_{IN} \cdot V_{OUT})$	V_{IN}=2.1~12.0V	-	0.1	-	%/V	3

+2.5V Version (C_{IN}=C_O=0.1uF, Ta=25°C)

PARAMETER	SYMBOL	CONDITION	MIN	TYP	MAX	UNIT	CIRCUIT
Output Voltage	V_{OUT}	V_{IN}=4.5V, I_{OUT}=10mA	2.45	2.50	2.55	V	1
Dropout Voltage	ΔV_{IO}	I_{OUT}=20mA	-	0.2	0.6	V	1
Input Voltage	V_{IN}		-	-	15	V	2
Operating Current	I_Q	V_{IN}=4.5V	-	10	20	uA	2
Load Regulation	$\Delta V_{OUT}/\Delta I_{OUT}$	V_{IN}=4.5V, I_{OUT}=1~20mA	-	15	180	mV	3
Line Regulation	$\Delta V_{OUT}/(\Delta V_{IN} \cdot V_{OUT})$	V_{IN}=3.5~12.0V	-	0.1	-	%/V	3

+2.6V Version (C_{IN}=C_O=0.1uF, Ta=25°C)

PARAMETER	SYMBOL	CONDITION	MIN	TYP	MAX	UNIT	CIRCUIT
Output Voltage	V_{OUT}	V_{IN}=4.6V, I_{OUT}=10mA	2.548	2.600	2.652	V	1
Dropout Voltage	ΔV_{IO}	I_{OUT}=20mA	-	0.2	0.6	V	1
Input Voltage	V_{IN}		-	-	15	V	2
Operating Current	I_Q	V_{IN}=4.6V	-	10	20	uA	2
Load Regulation	$\Delta V_{OUT}/\Delta I_{OUT}$	V_{IN}=4.6V, I_{OUT}=1~20mA	-	15	180	mV	3
Line Regulation	$\Delta V_{OUT}/(\Delta V_{IN} \cdot V_{OUT})$	V_{IN}=3.6~12.0V	-	0.1	-	%/V	3

+2.7V Version (C_{IN}=C_O=0.1uF, Ta=25°C)

PARAMETER	SYMBOL	CONDITION	MIN	TYP	MAX	UNIT	CIRCUIT
Output Voltage	V_{OUT}	V_{IN}=4.7V, I_{OUT}=10mA	2.646	2.70	2.754	V	1
Dropout Voltage	ΔV_{IO}	I_{OUT}=20mA	-	0.2	0.6	V	1
Input Voltage	V_{IN}		-	-	15	V	2
Operating Current	I_Q	V_{IN}=4.7V	-	10	20	uA	2
Load Regulation	$\Delta V_{OUT}/\Delta I_{OUT}$	V_{IN}=4.7V, I_{OUT}=1~20mA	-	15	180	mV	3
Line Regulation	$\Delta V_{OUT}/(\Delta V_{IN} \cdot V_{OUT})$	V_{IN}=3.7~12.0V	-	0.1	-	%/V	3

+2.8V Version (C_{IN}=C_O=0.1uF, Ta=25°C)

PARAMETER	SYMBOL	CONDITION	MIN	TYP	MAX	UNIT	CIRCUIT
Output Voltage	V_{OUT}	V_{IN}=4.8V, I_{OUT}=10mA	2.744	2.800	2.856	V	1
Dropout Voltage	ΔV_{IO}	I_{OUT}=20mA	-	0.2	0.6	V	1
Input Voltage	V_{IN}		-	-	15	V	2
Operating Current	I_Q	V_{IN}=4.8V	-	10	20	uA	2
Load Regulation	$\Delta V_{OUT}/\Delta I_{OUT}$	V_{IN}=4.8V, I_{OUT}=1~20mA	-	15	180	mV	3
Line Regulation	$\Delta V_{OUT}/(\Delta V_{IN} \cdot V_{OUT})$	V_{IN}=3.8~12.0V	-	0.1	-	%/V	3

+2.9V Version (C_{IN}=C_O=0.1uF, Ta=25°C)

PARAMETER	SYMBOL	CONDITION	MIN	TYP	MAX	UNIT	CIRCUIT
Output Voltage	V_{OUT}	V_{IN}=4.9V, I_{OUT}=10mA	2.842	2.900	2.958	V	1
Dropout Voltage	ΔV_{IO}	I_{OUT}=20mA	-	0.2	0.6	V	1
Input Voltage	V_{IN}		-	-	15	V	2
Operating Current	I_Q	V_{IN}=4.9V	-	10	20	uA	2
Load Regulation	$\Delta V_{OUT}/\Delta I_{OUT}$	V_{IN}=4.9V, I_{OUT}=1~20mA	-	15	180	mV	3
Line Regulation	$\Delta V_{OUT}/(\Delta V_{IN} \cdot V_{OUT})$	V_{IN}=3.9~12.0V	-	0.1	-	%/V	3

+3.0V Version (C_{IN}=C_O=0.1uF, Ta=25°C)

PARAMETER	SYMBOL	CONDITION	MIN	TYP	MAX	UNIT	CIRCUIT
Output Voltage	V_{OUT}	V_{IN}=5.0V, I_{OUT}=10mA	2.94	3.00	3.06	V	1
Dropout Voltage	ΔV_{IO}	I_{OUT}=20mA	-	0.2	0.6	V	1
Input Voltage	V_{IN}		-	-	15	V	2
Operating Current	I_Q	V_{IN}=5.0V	-	10	20	uA	2
Load Regulation	$\Delta V_{OUT}/\Delta I_{OUT}$	V_{IN}=5.0V, I_{OUT}=1~20mA	-	15	180	mV	3
Line Regulation	$\Delta V_{OUT}/(\Delta V_{IN} \cdot V_{OUT})$	V_{IN}=4.0~12.0V	-	0.1	-	%/V	3

+3.3V Version (C_{IN}=C_O=0.1uF, Ta=25°C)

PARAMETER	SYMBOL	CONDITION	MIN	TYP	MAX	UNIT	CIRCUIT
Output Voltage	V_{OUT}	V_{IN}=5.3V, I_{OUT}=10mA	3.234	3.300	3.366	V	1
Dropout Voltage	ΔV_{IO}	I_{OUT}=20mA	-	0.2	0.6	V	1
Input Voltage	V_{IN}		-	-	15	V	2
Operating Current	I_Q	V_{IN}=5.3V	-	10	20	uA	2
Load Regulation	$\Delta V_{OUT}/\Delta I_{OUT}$	V_{IN}=5.3V, I_{OUT}=1~20mA	-	15	180	mV	3
Line Regulation	$\Delta V_{OUT}/(\Delta V_{IN} \cdot V_{OUT})$	V_{IN}=4.3~12.0V	-	0.1	-	%/V	3

+5.0V Version (C_{IN}=C_O=0.1uF, Ta=25°C)

PARAMETER	SYMBOL	CONDITION	MIN	TYP	MAX	UNIT	CIRCUIT
Output Voltage	V_{OUT}	V_{IN}=7.0V, I_{OUT}=30mA	4.90	5.00	5.10	V	1
Dropout Voltage	ΔV_{IO}	I_{OUT}=40mA	-	0.3	0.6	V	1
Input Voltage	V_{IN}		-	-	15	V	2
Operating Current	I_Q	V_{IN}=7.0V	-	10	20	uA	2
Load Regulation	$\Delta V_{OUT}/\Delta I_{OUT}$	V_{IN}=7.0V, I_{OUT}=1~40mA	-	35	120	mV	3
Line Regulation	$\Delta V_{OUT}/(\Delta V_{IN} \cdot V_{OUT})$	V_{IN}=6.0~12.0V	-	0.1	-	%/V	3

+5.0V Version (C_{IN}=C_O=0.1uF, Ta=25°C)

PARAMETER	SYMBOL	CONDITION	MIN	TYP	MAX	UNIT	CIRCUIT
Output Voltage	V_{OUT}	V_{IN}=7.2V, I_{OUT}=30mA	5.096	5.200	5.304	V	1
Dropout Voltage	ΔV_{IO}	I_{OUT}=40mA	-	0.3	0.6	V	1
Input Voltage	V_{IN}		-	-	15	V	2
Operating Current	I_Q	V_{IN}=7.2V	-	10	20	uA	2
Load Regulation	$\Delta V_{OUT}/\Delta I_{OUT}$	V_{IN}=7.2V, I_{OUT}=1~40mA	-	35	120	mV	3
Line Regulation	$\Delta V_{OUT}/(\Delta V_{IN} \cdot V_{OUT})$	V_{IN}=6.2~12.0V	-	0.1	-	%/V	3

□ MEASUREMENT CIRCUIT

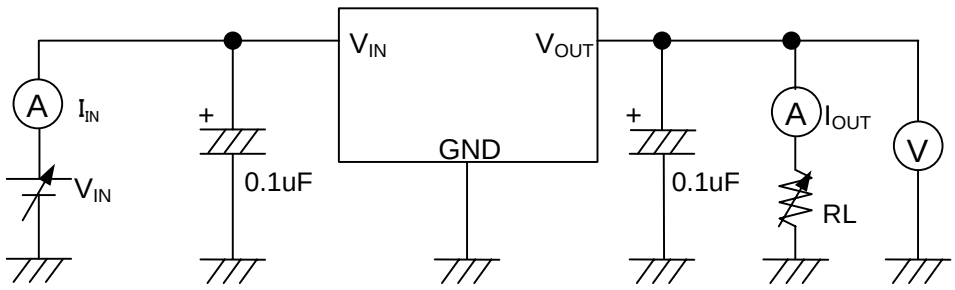

[CAUTION]
The specifications on this databook are only given for information , without any guarantee as regards either mistakes or omissions. The application circuits in this databook are described only to show representative usages of the product and not intended for the guarantee or permission of any right including the industrial rights.

ENTEGRECİ

Bu belge www.entegreci.com üzerinden sunulmaktadır.

Elektronik komponent tedarikinde Entegreci

Entegreci, Eskişehir merkezli, Türkiye geneline satış yapan bir elektronik komponent mağazasıdır. Entegreler (IC), mikrodenetleyiciler, transistörler, diyotlar, pasif elemanlar, konnektörler, modüller ve geliştirme kartları tek adetten seri üretim adetlerine kadar satılır. Ürün sayfalarında güncel stok durumunu, fiyatı ve datasheet bağlantısını bulabilirsiniz.

Parça koduyla arama

Üretici parça numarasını yazın; stok ve fiyatı hemen görün.

www.entegreci.com

Ürün kategorileri

Entegreden kapasitöre tüm elektronik komponent kategorileri.

Kategorilere göz atın

Üreticiler

Aradığınız üreticinin ürünlerini tek sayfada inceleyin.

Üreticileri görün

Toplu alım ve teklif

Listede olmayan ya da yüksek adetli parçalar için teklif isteyin.

Teklif isteyin

www.entegreci.com | **destek@entegreci.com** | **0850 305 90 34**

Entegreci is an online electronic components store based in Türkiye. Search by manufacturer part number to see stock, prices and datasheets for integrated circuits, microcontrollers, transistors, passive components and connectors, or request a quote for parts that are not listed.

Bu sayfa Entegreci tarafından eklenmiştir. Belgenin önceki sayfaları asıl yayıncısına aittir ve içeriği değiştirilmemiştir; en güncel sürüm için belgenin yayıncısına başvurun.