High-Precision LDO 60mA C-MOS Voltage Regulator with Standby

■ GENERAL DESCRIPTION

The NJU7241 series are high precision ±2%, 60mA output, C-MOS voltage regulators with standby function, which contains internal accurate voltage reference, error amplifier, control transistor, output voltage setting resistor, short current protection circuit and standby circuit.

The fixed regulation voltages of internal circuits are as following line-up.

The NJU7241 series packed MTP5 and suitable for battery-operated items, battery back-up systems, and especially control block of cellular phone system because of low operating current and low dropout voltage.

■ PACKAGE OUTLINE



NJU7241F

■ FEATURES

- High Precision Output Voltage ±2%
- Low Operating Current 20μA typ.
- Low Standby Current 0.1μA typ.
- Low Dropout Voltage 0.2V typ. V_{OUT}=3V
- Ripple Rejection 55dB typ. @1kHz
- Standby Function
- Small Temperature Coefficient of Output Voltage
- Wide Operating Voltage Range
- Package Outline MTP-5
- C-MOS Technology

■ OUTPUT VOLTAGE LINE-UP

Output Voltage	Type	Output Voltage	Type
1.8V	NJU7241F18	3.4V	NJU7250F34
2.4V	NJU7241F24	3.5V	NJU7241F35
2.5V	NJU7241F25	3.6V	NJU7241F36
2.55V	NJU7241F255	4.0V	NJU7241F40
2.8V	NJU7241F28	4.5V	NJU7241F45
2.85V	NJU7241F285	5.0V	NJU7241F50
2.9V	NJU7241F29	5.9V	NJU7241F59
3.0V	NJU7241F30	6.0V	NJU7241F60
3.3V	NJU7250F33	-	-

Planning Voltage: 2.4V, 3.5V, 3.6V, 4.0V and 6.0V

■ TERMINAL DESCRIPTION

No.	Symbol	Function
1	GND	GND
2	V_{IN}	Input
3	V_{OUT}	Output
4	NC	None Connection
5	STB	Standby: Internal Pull-down H: Regulation L: Standby, Output off

■ PIN CONFIGURATION

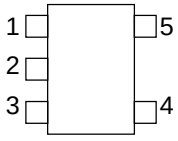

■ EQUIVALENT CIRCUIT

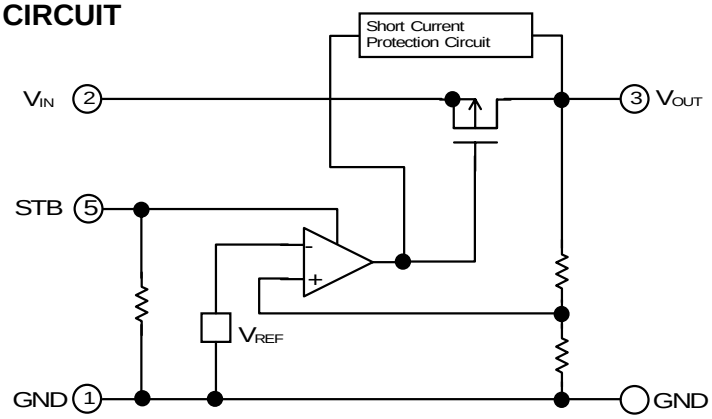

■ ABSOLUTE MAXIMUM RATINGS

(Ta=25°C)

Parameter	Symbol	Ratings	Unit
Input Voltage	V_{IN}	15	V
Input Voltage	V_{STB}	GND-0.3 ~ V_{IN}+0.3	V
Output Voltage	V_{OUT}	GND-0.3 ~ V_{IN}+0.3	V
Output Current	I_{OUT}	120	mA
Power Dissipation	P_D	200	mW
Operating Temperature	Topr	-40 ~ +85	°C
Storage Temperature	Tstg	-40 ~ +125	°C

■ ELECTRICAL CHARACTERISTICS

•V_O=1.8V (C_{IN}=0.1µF, C_O=10µF, Ta=25°C)

Parameter	Symbol	Condition	MIN.	TYP.	MAX.	Unit
Output Voltage	V_O	V_{IN}=2.8V, I_O=30mA	1.764	1.800	1.836	V
Dropout Voltage	ΔV_{IO}	I_O=15mA		0.2	0.3	V
Input Voltage	V_{IN}				14	V
Operating Current	I_{DD1}	V_{IN}=2.8V, V_{STB}=V_{IN}, No Load		20	40	µA
Standby Current	I_{DD2}	V_{IN}=2.8V, V_{STB}=GND		0.1	1.0	µA
Input Current	I_{STB}	V_{IN}=2.8V, V_{STB}=V_{IN}		0.56	1.12	µA
Load Regulation	$\Delta V_O/\Delta I_O$	V_{IN}=2.8V, 1mA≦I_O≦60mA		200	300	mV
Line Regulation	$\Delta V_O/\Delta V_{IN}$	V_{IN}=2.8V~12V		0.10		%/V
Ripple Rejection	RR	V_{IN}=2.8V, ein=0.5Vp-p, 1kHz		55		dB
H Level Input Voltage	V_{STBH}		1.5		V_{IN}	V
L Level Input Voltage	V_{STBL}		0		0.25	V

•V_O=2.4V (C_{IN}=0.1µF, C_O=10µF, Ta=25°C)

Parameter	Symbol	Condition	MIN.	TYP.	MAX.	Unit
Output Voltage	V_O	V_{IN}=3.4V, I_O=30mA	2.352	2.400	2.448	V
Dropout Voltage	ΔV_{IO}	I_O=30mA		0.2	0.3	V
Input Voltage	V_{IN}				14	V
Operating Current	I_{DD1}	V_{IN}=3.4V, V_{STB}=V_{IN}, No Load		20	40	µA
Standby Current	I_{DD2}	V_{IN}=3.4V, V_{STB}=GND		0.1	1.0	µA
Input Current	I_{STB}	V_{IN}=3.4V, V_{STB}=V_{IN}		0.9	1.8	µA
Load Regulation	$\Delta V_O/\Delta I_O$	V_{IN}=3.4V, 1mA≦I_O≦60mA		200	300	mV
Line Regulation	$\Delta V_O/\Delta V_{IN}$	V_{IN}=3.4V~12V		0.10		%/V
Ripple Rejection	RR	V_{IN}=3.4V, ein=0.5Vp-p, 1kHz		55		dB
H Level Input Voltage	V_{STBH}		1.5		V_{IN}	V
L Level Input Voltage	V_{STBL}		0		0.25	V

•V_O=2.5V (C_{IN}=0.1µF, C_O=10µF, Ta=25°C)

Parameter	Symbol	Condition	MIN.	TYP.	MAX.	Unit
Output Voltage	V_O	V_{IN}=3.5V, I_O=30mA	2.450	2.500	2.550	V
Dropout Voltage	ΔV_{IO}	I_O=50mA		0.2	0.3	V
Input Voltage	V_{IN}				14	V
Operating Current	I_{DD1}	V_{IN}=3.5V, V_{STB}=V_{IN}, No Load		20	40	µA
Standby Current	I_{DD2}	V_{IN}=3.5V, V_{STB}=GND		0.1	1.0	µA
Input Current	I_{STB}	V_{IN}=3.5V, V_{STB}=V_{IN}		1.0	2.0	µA
Load Regulation	$\Delta V_O/\Delta I_O$	V_{IN}=3.5V, 1mA≦I_O≦60mA		35	120	mV
Line Regulation	$\Delta V_O/\Delta V_{IN}$	V_{IN}=3.5V~12V		0.10		%/V
Ripple Rejection	RR	V_{IN}=3.5V, ein=0.5Vp-p, 1kHz		55		dB
H Level Input Voltage	V_{STBH}		1.5		V_{IN}	V
L Level Input Voltage	V_{STBL}		0		0.25	V

•V_O=2.55V (C_{IN}=0.1µF, C_O=10µF, Ta=25°C)

Parameter	Symbol	Condition	MIN.	TYP.	MAX.	Unit
Output Voltage	V_O	V_{IN}=3.55V, I_O=30mA	2.499	2.550	2.601	V
Dropout Voltage	ΔV_{IO}	I_O=50mA		0.2	0.3	V
Input Voltage	V_{IN}				14	V
Operating Current	I_{DD1}	V_{IN}=3.55V, V_{STB}=V_{IN}, No Load		20	40	µA
Standby Current	I_{DD2}	V_{IN}=3.55V, V_{STB}=GND		0.1	1.0	µA
Input Current	I_{STB}	V_{IN}=3.55V, V_{STB}=V_{IN}		1.05	2.1	µA
Load Regulation	$\Delta V_O/\Delta I_O$	V_{IN}=3.55V, 1mA≦I_O≦60mA		35	120	mV
Line Regulation	$\Delta V_O/\Delta V_{IN}$	V_{IN}=3.55V~12V		0.10		%/V
Ripple Rejection	RR	V_{IN}=3.55V, ein=0.5Vp-p, 1kHz		55		dB
H Level Input Voltage	V_{STBH}		1.5		V_{IN}	V
L Level Input Voltage	V_{STBL}		0		0.25	V

•V_O=2.8V (C_{IN}=0.1µF, C_O=10µF, Ta=25°C)

Parameter	Symbol	Condition	MIN.	TYP.	MAX.	Unit
Output Voltage	V_O	V_{IN}=3.8V, I_O=30mA	2.744	2.800	2.856	V
Dropout Voltage	ΔV_{IO}	I_O=50mA		0.2	0.3	V
Input Voltage	V_{IN}				14	V
Operating Current	I_{DD1}	V_{IN}=3.8V, V_{STB}=V_{IN}, No Load		20	40	µA
Standby Current	I_{DD2}	V_{IN}=3.8V, V_{STB}=GND		0.1	1.0	µA
Input Current	I_{STB}	V_{IN}=3.8V, V_{STB}=V_{IN}		1.3	2.6	µA
Load Regulation	$\Delta V_O/\Delta I_O$	V_{IN}=3.8V, 1mA≦I_O≦60mA		35	120	mV
Line Regulation	$\Delta V_O/\Delta V_{IN}$	V_{IN}=3.8V~12V		0.10		%/V
Ripple Rejection	RR	V_{IN}=3.8V, ein=0.5Vp-p, 1kHz		55		dB
H Level Input Voltage	V_{STBH}		1.5		V_{IN}	V
L Level Input Voltage	V_{STBL}		0		0.25	V

•V_O=2.85V (C_{IN}=0.1µF, C_O=10µF, Ta=25°C)

Parameter	Symbol	Condition	MIN.	TYP.	MAX.	Unit
Output Voltage	V_O	V_{IN}=3.85V, I_O=30mA	2.793	2.850	2.907	V
Dropout Voltage	ΔV_{IO}	I_O=50mA		0.2	0.3	V
Input Voltage	V_{IN}				14	V
Operating Current	I_{DD1}	V_{IN}=3.85V, V_{STB}=V_{IN}, No Load		20	40	µA
Standby Current	I_{DD2}	V_{IN}=3.85V, V_{STB}=GND		0.1	1.0	µA
Input Current	I_{STB}	V_{IN}=3.85V, V_{STB}=V_{IN}		1.35	2.70	µA
Load Regulation	$\Delta V_O/\Delta I_O$	V_{IN}=3.85V, 1mA≦I_O≦60mA		35	120	mV
Line Regulation	$\Delta V_O/\Delta V_{IN}$	V_{IN}=3.85V~12V		0.10		%/V
Ripple Rejection	RR	V_{IN}=3.85V, ein=0.5Vp-p, 1kHz		55		dB
H Level Input Voltage	V_{STBH}		1.5		V_{IN}	V
L Level Input Voltage	V_{STBL}		0		0.25	V

•V_O=2.9V (C_{IN}=0.1µF, C_O=10µF, Ta=25°C)

Parameter	Symbol	Condition	MIN.	TYP.	MAX.	Unit
Output Voltage	V_O	V_{IN}=3.9V, I_O=30mA	2.842	2.900	2.958	V
Dropout Voltage	ΔV_{IO}	I_O=50mA		0.2	0.3	V
Input Voltage	V_{IN}				14	V
Operating Current	I_{DD1}	V_{IN}=3.9V, V_{STB}=V_{IN}, No Load		20	40	µA
Standby Current	I_{DD2}	V_{IN}=3.9V, V_{STB}=GND		0.1	1.0	µA
Input Current	I_{STB}	V_{IN}=3.9V, V_{STB}=V_{IN}		1.4	2.8	µA
Load Regulation	$\Delta V_O/\Delta I_O$	V_{IN}=3.9V, 1mA≦I_O≦60mA		35	120	mV
Line Regulation	$\Delta V_O/\Delta V_{IN}$	V_{IN}=3.9V~12V		0.10		%/V
Ripple Rejection	RR	V_{IN}=3.9V, ein=0.5Vp-p, 1kHz		55		dB
H Level Input Voltage	V_{STBH}		1.5		V_{IN}	V
L Level Input Voltage	V_{STBL}		0		0.25	V

•V_O=3.0V (C_{IN}=0.1µF, C_O=10µF, Ta=25°C)

Parameter	Symbol	Condition	MIN.	TYP.	MAX.	Unit
Output Voltage	V_O	V_{IN}=4.0V, I_O=30mA	2.940	3.000	3.060	V
Dropout Voltage	ΔV_{IO}	I_O=60mA		0.2	0.3	V
Input Voltage	V_{IN}				14	V
Operating Current	I_{DD1}	V_{IN}=4.0V, V_{STB}=V_{IN}, No Load		20	40	µA
Standby Current	I_{DD2}	V_{IN}=4.0V, V_{STB}=GND		0.1	1.0	µA
Input Current	I_{STB}	V_{IN}=4.0V, V_{STB}=V_{IN}		1.5	3.0	µA
Load Regulation	$\Delta V_O/\Delta I_O$	V_{IN}=4.0V, 1mA≦I_O≦60mA		35	120	mV
Line Regulation	$\Delta V_O/\Delta V_{IN}$	V_{IN}=4.0V~12V		0.10		%/V
Ripple Rejection	RR	V_{IN}=4.0V, ein=0.5Vp-p, 1kHz		55		dB
H Level Input Voltage	V_{STBH}		1.5		V_{IN}	V
L Level Input Voltage	V_{STBL}		0		0.25	V

•V_O=3.3V (C_{IN}=0.1µF, C_O=10µF, Ta=25°C)

Parameter	Symbol	Condition	MIN.	TYP.	MAX.	Unit
Output Voltage	V_O	V_{IN}=4.3V, I_O=30mA	3.234	3.300	3.366	V
Dropout Voltage	ΔV_{IO}	I_O=60mA		0.2	0.3	V
Input Voltage	V_{IN}				14	V
Operating Current	I_{DD1}	V_{IN}=4.3V, V_{STB}=V_{IN}, No Load		20	40	µA
Standby Current	I_{DD2}	V_{IN}=4.3V, V_{STB}=GND		0.1	1.0	µA
Input Current	I_{STB}	V_{IN}=4.3V, V_{STB}=V_{IN}		1.8	3.6	µA
Load Regulation	$\Delta V_O/\Delta I_O$	V_{IN}=4.3V, 1mA≦I_O≦60mA		35	120	mV
Line Regulation	$\Delta V_O/\Delta V_{IN}$	V_{IN}=4.3V~12V		0.10		%/V
Ripple Rejection	RR	V_{IN}=4.3V, ein=0.5Vp-p, 1kHz		55		dB
H Level Input Voltage	V_{STBH}		1.5		V_{IN}	V
L Level Input Voltage	V_{STBL}		0		0.25	V

•V_O=3.4V (C_{IN}=0.1µF, C_O=10µF, Ta=25°C)

Parameter	Symbol	Condition	MIN.	TYP.	MAX.	Unit
Output Voltage	V_O	V_{IN}=4.4V, I_O=30mA	3.332	3.400	3.468	V
Dropout Voltage	ΔV_{IO}	I_O=60mA		0.2	0.3	V
Input Voltage	V_{IN}				14	V
Operating Current	I_{DD1}	V_{IN}=4.4V, V_{STB}=V_{IN}, No Load		20	40	µA
Standby Current	I_{DD2}	V_{IN}=4.4V, V_{STB}=GND		0.1	1.0	µA
Input Current	I_{STB}	V_{IN}=4.4V, V_{STB}=V_{IN}		1.9	3.8	µA
Load Regulation	$\Delta V_O/\Delta I_O$	V_{IN}=4.4V, 1mA≦I_O≦60mA		35	120	mV
Line Regulation	$\Delta V_O/\Delta V_{IN}$	V_{IN}=4.4V~12V		0.10		%/V
Ripple Rejection	RR	V_{IN}=4.4V, ein=0.5Vp-p, 1kHz		55		dB
H Level Input Voltage	V_{STBH}		1.5		V_{IN}	V
L Level Input Voltage	V_{STBL}		0		0.25	V

•V_O=3.5V (C_{IN}=0.1µF, C_O=10µF, Ta=25°C)

Parameter	Symbol	Condition	MIN.	TYP.	MAX.	Unit
Output Voltage	V_O	V_{IN}=4.5V, I_O=30mA	3.430	3.500	3.570	V
Dropout Voltage	ΔV_{IO}	I_O=60mA		0.2	0.3	V
Input Voltage	V_{IN}				14	V
Operating Current	I_{DD1}	V_{IN}=4.5V, V_{STB}=V_{IN}, No Load		20	40	µA
Standby Current	I_{DD2}	V_{IN}=4.5V, V_{STB}=GND		0.1	1.0	µA
Input Current	I_{STB}	V_{IN}=4.5V, V_{STB}=V_{IN}		2.0	4.0	µA
Load Regulation	$\Delta V_O/\Delta I_O$	V_{IN}=4.5V, 1mA≦I_O≦60mA		35	120	mV
Line Regulation	$\Delta V_O/\Delta V_{IN}$	V_{IN}=4.5V~12V		0.10		%/V
Ripple Rejection	RR	V_{IN}=4.5V, ein=0.5Vp-p, 1kHz		55		dB
H Level Input Voltage	V_{STBH}		1.5		V_{IN}	V
L Level Input Voltage	V_{STBL}		0		0.25	V

•V_O=3.6V (C_{IN}=0.1µF, C_O=10µF, Ta=25°C)

Parameter	Symbol	Condition	MIN.	TYP.	MAX.	Unit
Output Voltage	V_O	V_{IN}=4.6V, I_O=30mA	3.528	3.600	3.672	V
Dropout Voltage	ΔV_{IO}	I_O=60mA		0.2	0.3	V
Input Voltage	V_{IN}				14	V
Operating Current	I_{DD1}	V_{IN}=4.6V, V_{STB}=V_{IN}, No Load		20	40	µA
Standby Current	I_{DD2}	V_{IN}=4.6V, V_{STB}=GND		0.1	1.0	µA
Input Current	I_{STB}	V_{IN}=4.6V, V_{STB}=V_{IN}		2.1	4.2	µA
Load Regulation	$\Delta V_O/\Delta I_O$	V_{IN}=4.6V, 1mA≦I_O≦60mA		35	120	mV
Line Regulation	$\Delta V_O/\Delta V_{IN}$	V_{IN}=4.6V~12V		0.10		%/V
Ripple Rejection	RR	V_{IN}=4.6V, ein=0.5Vp-p, 1kHz		55		dB
H Level Input Voltage	V_{STBH}		1.5		V_{IN}	V
L Level Input Voltage	V_{STBL}		0		0.25	V

•V_O=4.0V (C_{IN}=0.1µF, C_O=10µF, Ta=25°C)

Parameter	Symbol	Condition	MIN.	TYP.	MAX.	Unit
Output Voltage	V_O	V_{IN}=5.0V, I_O=30mA	3.920	4.000	4.080	V
Dropout Voltage	ΔV_{IO}	I_O=60mA		0.2	0.3	V
Input Voltage	V_{IN}				14	V
Operating Current	I_{DD1}	V_{IN}=5.0V, V_{STB}=V_{IN}, No Load		20	40	µA
Standby Current	I_{DD2}	V_{IN}=5.0V, V_{STB}=GND		0.1	1.0	µA
Input Current	I_{STB}	V_{IN}=5.0V, V_{STB}=V_{IN}		2.5	5.0	µA
Load Regulation	$\Delta V_O/\Delta I_O$	V_{IN}=5.0V, 1mA≦I_O≦60mA		35	120	mV
Line Regulation	$\Delta V_O/\Delta V_{IN}$	V_{IN}=5.0V~12V		0.10		%/V
Ripple Rejection	RR	V_{IN}=5.0V, ein=0.5Vp-p, 1kHz		55		dB
H Level Input Voltage	V_{STBH}		1.5		V_{IN}	V
L Level Input Voltage	V_{STBL}		0		0.25	V

•V_O=4.5V (C_{IN}=0.1µF, C_O=10µF, Ta=25°C)

Parameter	Symbol	Condition	MIN.	TYP.	MAX.	Unit
Output Voltage	V_O	V_{IN}=5.5V, I_O=30mA	4.410	4.500	4.590	V
Dropout Voltage	ΔV_{IO}	I_O=60mA		0.2	0.3	V
Input Voltage	V_{IN}				14	V
Operating Current	I_{DD1}	V_{IN}=5.5V, V_{STB}=V_{IN}, No Load		20	40	µA
Standby Current	I_{DD2}	V_{IN}=5.5V, V_{STB}=GND		0.1	1.0	µA
Input Current	I_{STB}	V_{IN}=5.5V, V_{STB}=V_{IN}		3.0	6.0	µA
Load Regulation	$\Delta V_O/\Delta I_O$	V_{IN}=5.5V, 1mA≦I_O≦60mA		35	120	mV
Line Regulation	$\Delta V_O/\Delta V_{IN}$	V_{IN}=5.5V~12V		0.10		%/V
Ripple Rejection	RR	V_{IN}=5.5V, ein=0.5Vp-p, 1kHz		55		dB
H Level Input Voltage	V_{STBH}		1.5		V_{IN}	V
L Level Input Voltage	V_{STBL}		0		0.25	V

•V_O=5.0V (C_{IN}=0.1µF, C_O=10µF, Ta=25°C)

Parameter	Symbol	Condition	MIN.	TYP.	MAX.	Unit
Output Voltage	V_O	V_{IN}=6.0V, I_O=30mA	4.900	5.000	5.100	V
Dropout Voltage	ΔV_{IO}	I_O=60mA		0.2	0.3	V
Input Voltage	V_{IN}				14	V
Operating Current	I_{DD1}	V_{IN}=6.0V, V_{STB}=V_{IN}, No Load		20	40	µA
Standby Current	I_{DD2}	V_{IN}=6.0V, V_{STB}=GND		0.1	1.0	µA
Input Current	I_{STB}	V_{IN}=6.0V, V_{STB}=V_{IN}		3.5	7.0	µA
Load Regulation	$\Delta V_O/\Delta I_O$	V_{IN}=6.0V, 1mA≦I_O≦60mA		35	120	mV
Line Regulation	$\Delta V_O/\Delta V_{IN}$	V_{IN}=6.0V~12V		0.10		%/V
Ripple Rejection	RR	V_{IN}=6.0V, ein=0.5Vp-p, 1kHz		55		dB
H Level Input Voltage	V_{STBH}		1.5		V_{IN}	V
L Level Input Voltage	V_{STBL}		0		0.25	V

•V_O=5.9V (C_{IN}=0.1µF, C_O=10µF, Ta=25°C)

Parameter	Symbol	Condition	MIN.	TYP.	MAX.	Unit
Output Voltage	V_O	V_{IN}=6.9V, I_O=30mA	5.782	5.900	6.018	V
Dropout Voltage	ΔV_{IO}	I_O=60mA		0.2	0.3	V
Input Voltage	V_{IN}				14	V
Operating Current	I_{DD1}	V_{IN}=6.9V, V_{STB}=V_{IN}, No Load		20	40	µA
Standby Current	I_{DD2}	V_{IN}=6.9V, V_{STB}=GND		0.1	1.0	µA
Input Current	I_{STB}	V_{IN}=6.9V, V_{STB}=V_{IN}		4.4	8.8	µA
Load Regulation	$\Delta V_O/\Delta I_O$	V_{IN}=6.9V, 1mA≦I_O≦60mA		35	120	mV
Line Regulation	$\Delta V_O/\Delta V_{IN}$	V_{IN}=6.9V~12V		0.10		%/V
Ripple Rejection	RR	V_{IN}=6.9V, ein=0.5Vp-p, 1kHz		55		dB
H Level Input Voltage	V_{STBH}		1.5		V_{IN}	V
L Level Input Voltage	V_{STBL}		0		0.25	V

•V_O=6.0V (C_{IN}=0.1µF, C_O=10µF, Ta=25°C)

Parameter	Symbol	Condition	MIN.	TYP.	MAX.	Unit
Output Voltage	V_O	V_{IN}=7.0V, I_O=30mA	5.880	6.000	6.120	V
Dropout Voltage	ΔV_{IO}	I_O=60mA		0.2	0.3	V
Input Voltage	V_{IN}				14	V
Operating Current	I_{DD1}	V_{IN}=7.0V, V_{STB}=V_{IN}, No Load		20	40	µA
Standby Current	I_{DD2}	V_{IN}=7.0V, V_{STB}=GND		0.1	1.0	µA
Input Current	I_{STB}	V_{IN}=7.0V, V_{STB}=V_{IN}		4.5	9.0	µA
Load Regulation	$\Delta V_O/\Delta I_O$	V_{IN}=7.0V, 1mA≦I_O≦60mA		35	120	mV
Line Regulation	$\Delta V_O/\Delta V_{IN}$	V_{IN}=7.0V~12V		0.10		%/V
Ripple Rejection	RR	V_{IN}=7.0V, ein=0.5Vp-p, 1kHz		55		dB
H Level Input Voltage	V_{STBH}		1.5		V_{IN}	V
L Level Input Voltage	V_{STBL}		0		0.25	V

■ MEASUREMENT CIRCUIT

- Standard Test Circuit

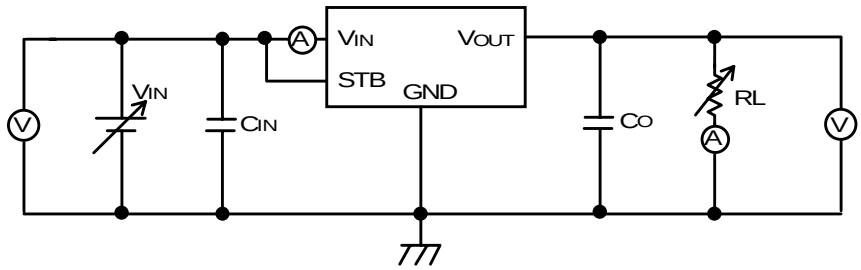

- Standby Input Voltage Test Circuit

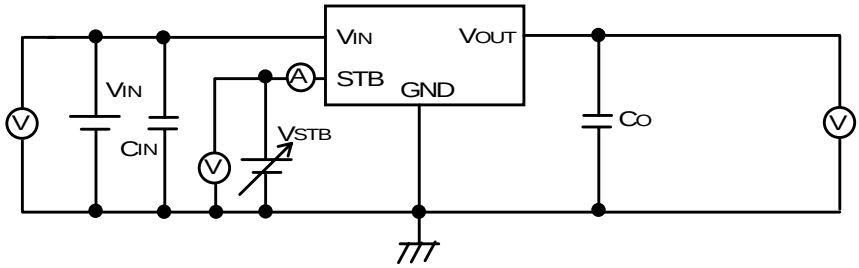

- Standby Input Current Test Circuit

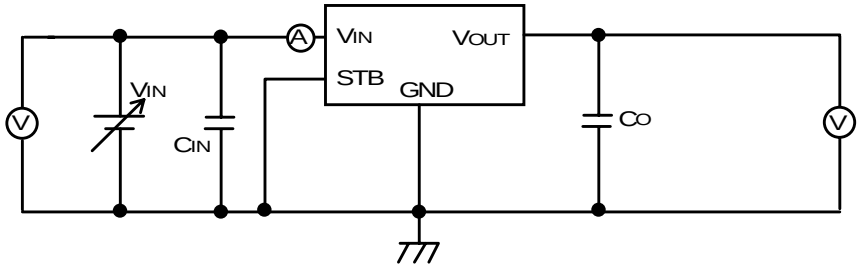

- Ripple Rejection Test Circuit

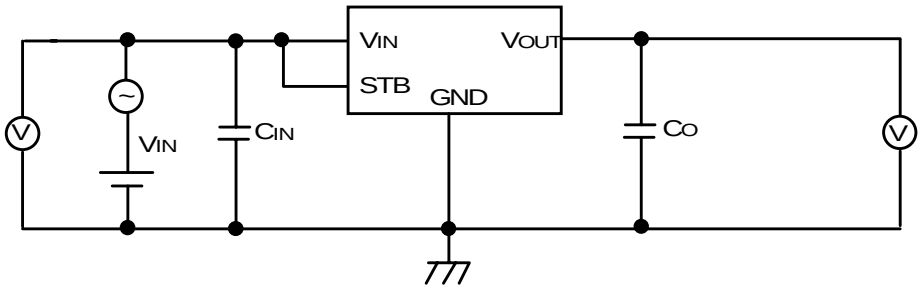

[CAUTION]
The specifications on this databook are only given for information , without any guarantee as regards either mistakes or omissions. The application circuits in this databook are described only to show representative usages of the product and not intended for the guarantee or permission of any right including the industrial rights.

ENTEGRECİ

Bu belge www.entegreci.com üzerinden sunulmaktadır.

Elektronik komponent tedarikinde Entegreci

Entegreci, Eskişehir merkezli, Türkiye geneline satış yapan bir elektronik komponent mağazasıdır. Entegreler (IC), mikrodenetleyiciler, transistörler, diyotlar, pasif elemanlar, konnektörler, modüller ve geliştirme kartları tek adetten seri üretim adetlerine kadar satılır. Ürün sayfalarında güncel stok durumunu, fiyatı ve datasheet bağlantısını bulabilirsiniz.

Parça koduyla arama

Üretici parça numarasını yazın; stok ve fiyatı hemen görün.

www.entegreci.com

Ürün kategorileri

Entegreden kapasitöre tüm elektronik komponent kategorileri.

Kategorilere göz atın

Üreticiler

Aradığınız üreticinin ürünlerini tek sayfada inceleyin.

Üreticileri görün

Toplu alım ve teklif

Listede olmayan ya da yüksek adetli parçalar için teklif isteyin.

Teklif isteyin

www.entegreci.com | **destek@entegreci.com** | **0850 305 90 34**

Entegreci is an online electronic components store based in Türkiye. Search by manufacturer part number to see stock, prices and datasheets for integrated circuits, microcontrollers, transistors, passive components and connectors, or request a quote for parts that are not listed.

Bu sayfa Entegreci tarafından eklenmiştir. Belgenin önceki sayfaları asıl yayıncısına aittir ve içeriği değiştirilmemiştir; en güncel sürüm için belgenin yayıncısına başvurun.