LOW DROPOUT VOLTAGE REGULATOR

■ GENERAL DISCRIPTION

NJU7741/44 is a low dropout voltage regulator with ON/OFF control and Output shunt switch.

Advanced CMOS technology achieves high ripple rejection and ultra low quiescent current.

It is suitable for reset small micro controller and other logic chips.

NJU7744 features shunt switch which improves turn off response of output voltage when ON/OFF control is used.

■ PACKAGE OUTLINE

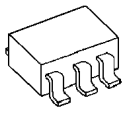

NJU7741/44F

■ FEATURES

- Ultra Low quiescent Current Iq=1.5μA typ.(I_O=0mA)
- Output capacitor with 0.1uF ceramic capacitor
- Output Current I_O(max.)=100mA
- High Precision Output V_O±1.0%
- Low Dropout Voltage 0.17V typ. (I_O=60mA, V_O=3V version)
- With ON/OFF Control (Active High)
- With Output Shunt Switch Only NJU7744
- Internal Short Circuit Current Limit
- CMOS Technology
- Package Outline SOT-23-5

■ PIN CONFIGURATION

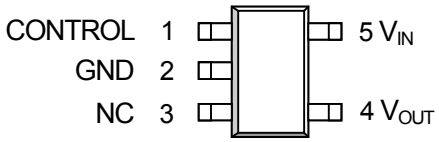

NJU7741/44F

■ BLOCK DIAGRAM

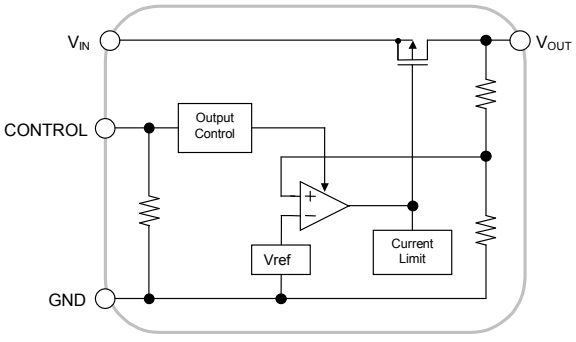

NJU7741

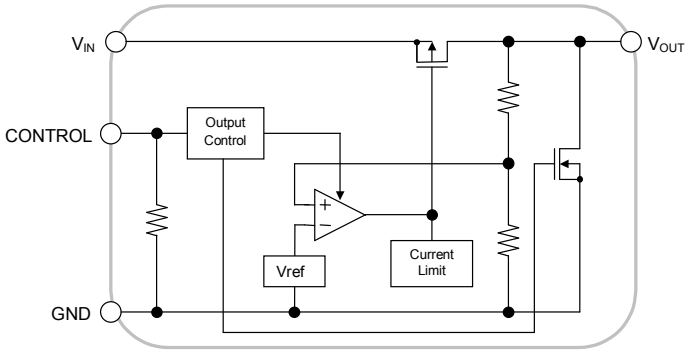

NJU7744

■ OUTPUT VOLTAGE RANK LIST

DEVICE NAME	V_{OUT}	DEVICE NAME	V_{OUT}	DEVICE NAME	V_{OUT}
NJU774*F15	1.5V	NJU774*F28	2.8V	NJU774*F04	4.0V
NJU774*F18	1.8V	NJU774*F29	2.9V	NJU774*F45	4.5V
NJU774*F19	1.9V	NJU774*F03	3.0V	NJU774*F05	5.0V
NJU774*F02	2.0V	NJU774*F31	3.1V	NJU774*F06	6.0V
NJU774*F25	2.5V	NJU774*F33	3.3V		
NJU774*F27	2.7V	NJU774*F37	3.7V		

■ ABSOLUTE MAXIMUM RATINGS (Ta=25°C)

PARAMETER	SYMBOL	RATINGS		UNIT
Input Voltage	V_{IN}	+10		V
Control Voltage	V_{CONT}	+10(*1)		V
Power Dissipation	P_D	SOT-23-5	380(*2)	mW
			510(*3)	
Operating Temperature	Topr	−40 ~ +85		°C
Storage Temperature	Tstg	−40 ~ +125		°C
Output Sink Current at OFF-state(*4)	I_O	10		mA

(*1) : When input voltage is less than +10V, the absolute maximum control voltage is equal to the input voltage.

(*2) : Mounted on glass epoxy board. (76.2 × 114.3 × 1.6mm:based on EIA/JDEC standard, 2Layers)

(*3) : Mounted on glass epoxy board. (76.2 × 114.3 × 1.6mm:based on EIA/JDEC standard, 4Layers), internal Cu area: 74.2x74.2mm

(*4) : This maximum rating is applied to NJU7744.

■ ELECTRICAL CHARACTERISTICS (V_{IN}=V_O+1V, C_{IN}=0.1μF, C_O=0.1μF, Ta=25°C)

PARAMETER	SYMBOL	TEST CONDITION		MIN.	TYP.	MAX.	UNIT
Output Voltage	V_O	I_O=30mA		−1.0%	–	+1.0%	V
Input Voltage	V_{IN}			–	–	9	V
Quiescent Current	I_Q	I_O =0mA, V_{CONT}=V_{IN}, Except I_{CONT}		–	1.5	3.5	μA
Quiescent Current at Control OFF	$I_{Q(OFF)}$	V_{CONT}=0V		–	0.1	1	μA
Output Current	I_O	V_O−0.3V		100	–	–	mA
Short Circuit Limit	I_{LIM}	V_O=0V		–	25	–	mA
Line Regulation	$\Delta V_O / \Delta V_{IN}$	V_{IN}= V_O+1V~V_O+6.0V(V_O<3.0V) V_{IN}= V_O+1V~9.0V(V_O≥3.0V), I_O=30mA		–	–	0.30	%/V
Load Regulation	$\Delta V_O / \Delta V_O$	Io=0~100mA		–	–	0.15	%/mA
Dropout Voltage	ΔV_{I-O}	Io=40mA	1.5V≤V_O≤2.0V	–	0.19	0.60	V
		Io=60mA	2.0V≤V_O≤2.4V	–	0.19	0.29	V
			2.5V≤V_O≤2.7V	–	0.18	0.27	V
			2.8V≤V_O≤3.3V	–	0.17	0.26	V
			3.4V≤V_O≤5.0V	–	0.16	0.24	V
			5.1V≤V_O≤6.0V	–	0.15	0.22	V
Average Temperature Coefficient of Output Voltage	$\Delta V_O / \Delta Ta$	Ta=0~85°C, I_O=10mA		–	±100	–	ppm/°C
Pull-down Resistance	R_{CONT}			2	5	10	MΩ
Control Voltage for ON-State	$V_{CONT(ON)}$			1.6	–	V_{IN}	V
Control Voltage for OFF-State	$V_{CONT(OFF)}$			0	–	0.3	V
Pull-down Resistance at OFF-state(note 5)	$R_{O(OFF)}$	V_{CONT}=0V (V_O=3.0V Version)		–	300	–	Ω

(*5) This electrical characteristics is applied to NJU7744.

The above specification is a common specification for all voltages.

Therefore, it may be different from the individual specification for a specific output Voltage.

■ THERMAL CHARACTERISTICS

PARAMETER	SYMBOL	VALUE	UNIT
Junction-to-ambient thermal resistance	θja	260(*6) 195(*7)	°C/W
Junction-to-Top of package characterization parameter	ψjt	70(*6) 60(*7)	°C/W

(*6) : Mounted on glass epoxy board. (76.2 × 114.3 × 1.6mm:based on EIA/JDEC standard, 2Layers)

(*7) : Mounted on glass epoxy board. (76.2 × 114.3 × 1.6mm:based on EIA/JDEC standard, 4Layers), internal Cu area: 74.2x74.2mm

■ POWER DISSIPATION vs. AMBIENT TEMPERATURE

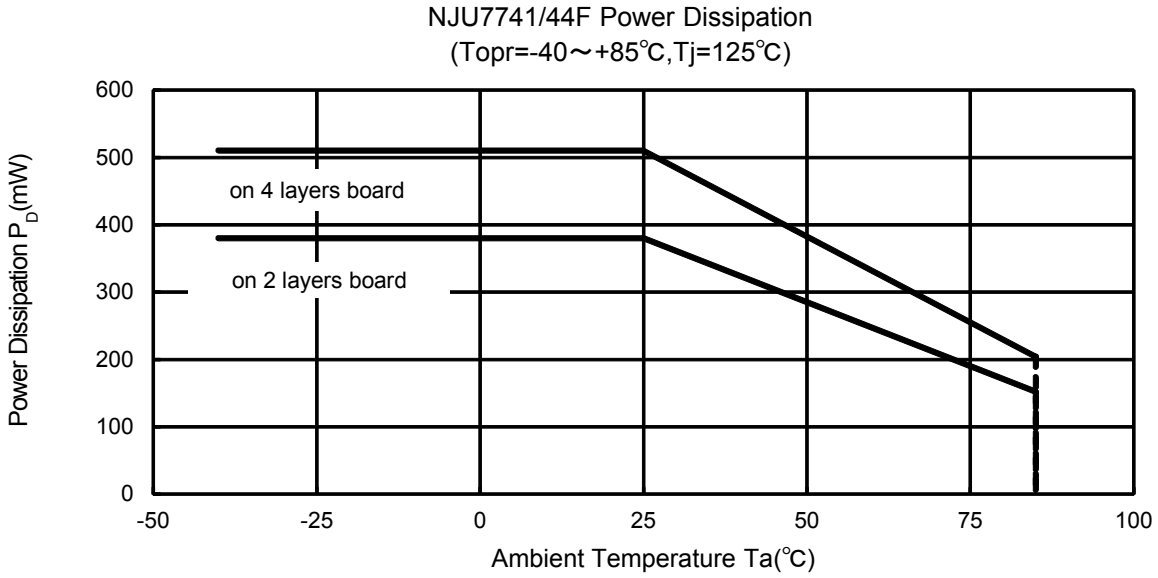

■ TEST CIRCUIT

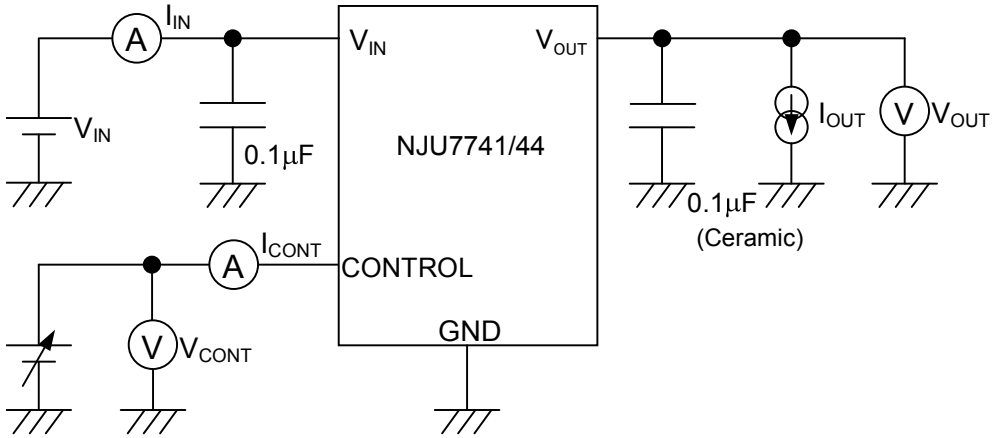

■ TYPICAL APPLICATION

① In case that ON/OFF Control is not required:

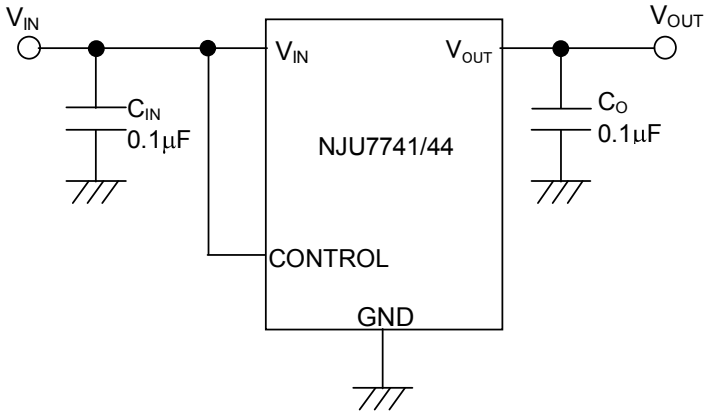

Connect control terminal to V_{IN} pin.

② In use of ON/OFF Control

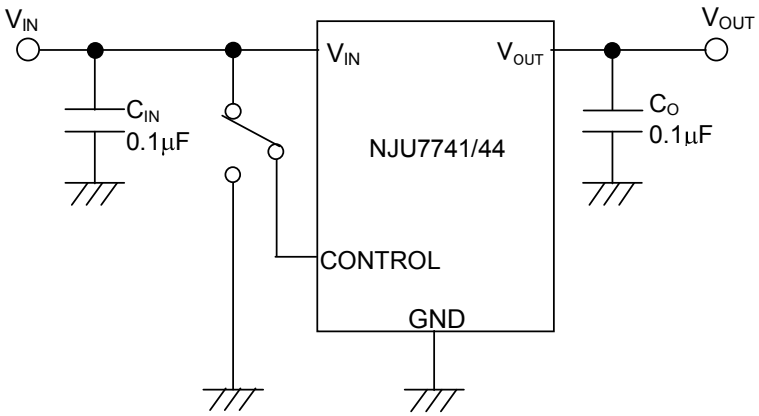

State of control pin:

- "H" → output is enabled.
- "L" or "open" → output is disabled.

*Transient response characteristic of Output Voltage

In general, overshoot or undershoot of output voltage may occur due to the transient response characteristic of an internal error amplifier.

Especially, low current consumption regulator may have overshoot or undershoot due to slow feedback caused by current saving design.

Therefore, design validation is important in the following cases:

1. Input voltage or output current change sharply
2. Output capacitors is small
3. Output load is light
4. A regulator starts up with very low dropout voltage operation.

Increasing the value of input and/or output capacitor is a common countermeasure for improving a transient response characteristic.

A transient response characteristic may vary with operating conditions and external components value.

Please check it with the actual environment.

*Input Capacitor C_{IN}

The input capacitor C_{IN} is required to prevent oscillation and reduce power supply ripple for applications when high power supply impedance or a long power supply line.

Therefore, use the recommended C_{IN} value (refer to conditions of ELECTRIC CHARACTERISTIC) or larger and should connect between GND and V_{IN} as shortest path as possible to avoid the problem

*Output Capacitor C_O

The output capacitor C_O will be required for a phase compensation of the internal error amplifier.

The capacitance and the equivalent series resistance (ESR) influence to stable operation of the regulator.

Use of a smaller C_O may cause excess an output noise or an oscillation of the regulator due to lack of the phase compensation.

On the other hand, use of a larger C_O reduces an output noise and a ripple output, and also improves an output transient response when a load rapidly changes.

Therefore, use the recommended C_O value (refer to conditions of ELECTRIC CHARACTERISTIC) or larger and should connect between GND and V_{OUT} as shortest path as possible for stable operation

The recommended capacitance depends on the output voltage rank. Especially, a low voltage regulator requires larger C_O value.

■ TYPICAL CHARACTERISTICS

NJU7741/44_3.0V
Output Voltage vs. Input Voltage

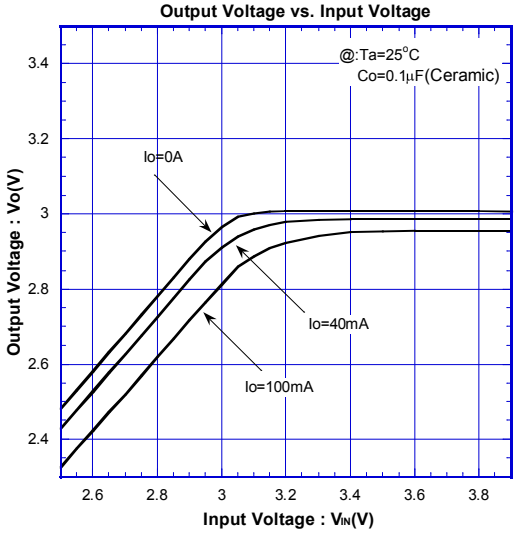

NJU7741/44_3.0V
Output Voltage vs. Output Current

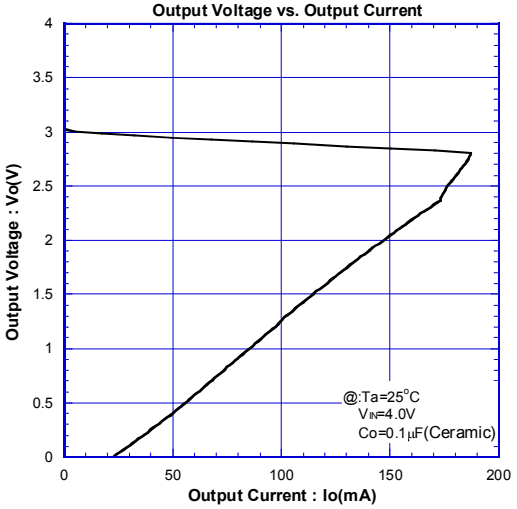

NJU7741/44_3.0V
Ground Pin Current v.s. Output Current

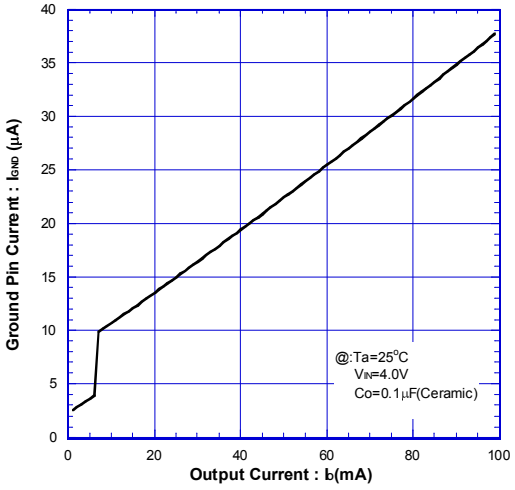

NJU7741/44_3.0V
Dropout Voltage vs. Output Current

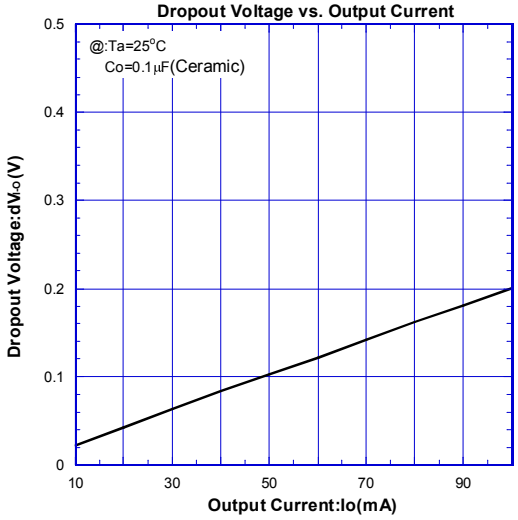

NJU7741/44_3.0V
Quiescent Current v.s. Input Voltage

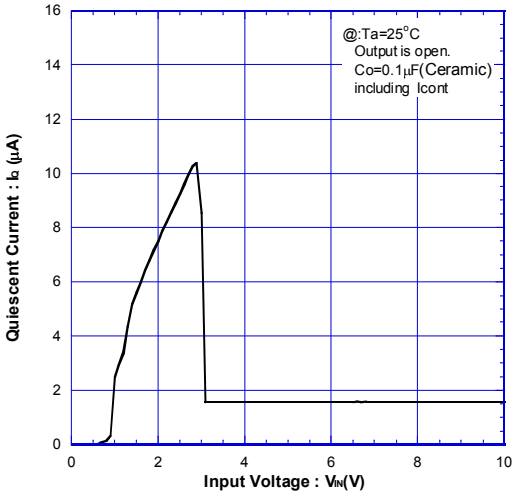

■ TYPICAL CHARACTERISTICS

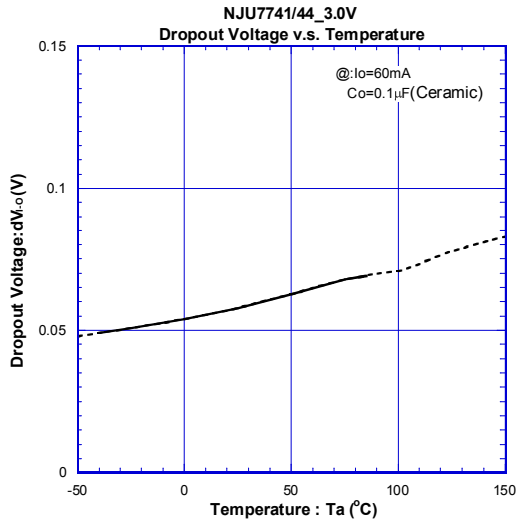

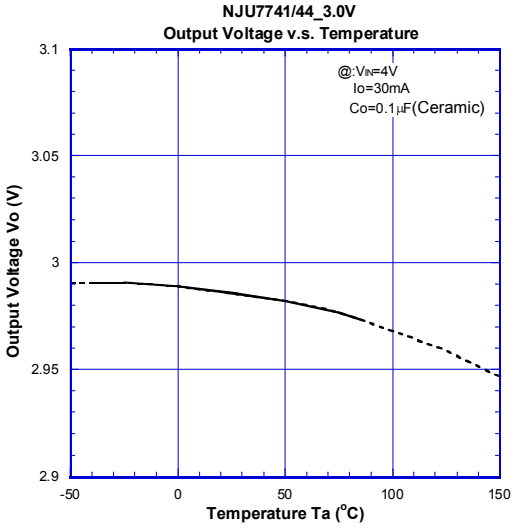

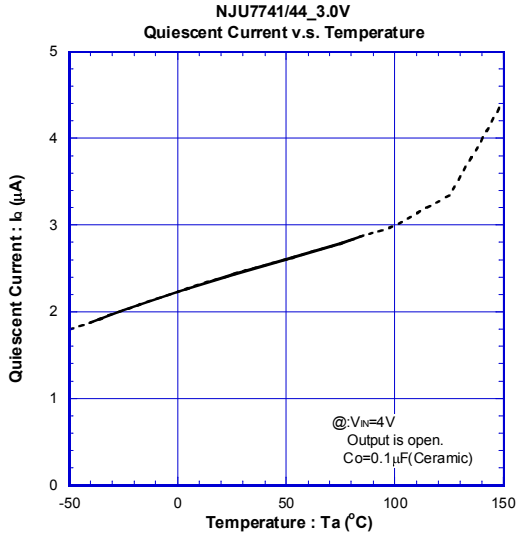

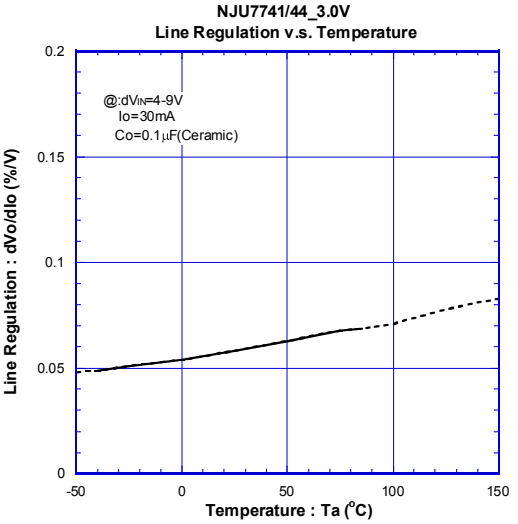

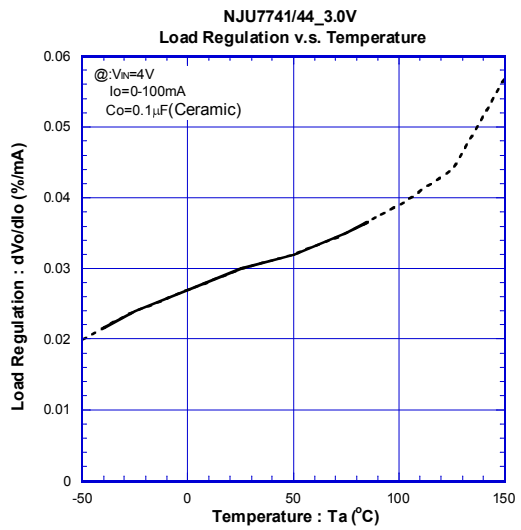

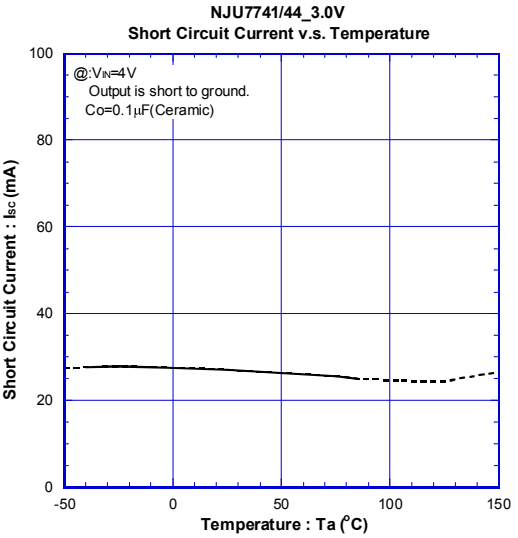

[CAUTION]
The specifications on this databook are only given for information , without any guarantee as regards either mistakes or omissions. The application circuits in this databook are described only to show representative usages of the product and not intended for the guarantee or permission of any right including the industrial rights.

ENTEGRECİ

Bu belge www.entegreci.com üzerinden sunulmaktadır.

Elektronik komponent tedarikinde Entegreci

Entegreci, Eskişehir merkezli, Türkiye geneline satış yapan bir elektronik komponent mağazasıdır. Entegreler (IC), mikrodenetleyiciler, transistörler, diyotlar, pasif elemanlar, konnektörler, modüller ve geliştirme kartları tek adetten seri üretim adetlerine kadar satılır. Ürün sayfalarında güncel stok durumunu, fiyatı ve datasheet bağlantısını bulabilirsiniz.

Parça koduyla arama

Üretici parça numarasını yazın; stok ve fiyatı hemen görün.

www.entegreci.com

Ürün kategorileri

Entegreden kapasitöre tüm elektronik komponent kategorileri.

Kategorilere göz atın

Üreticiler

Aradığınız üreticinin ürünlerini tek sayfada inceleyin.

Üreticileri görün

Toplu alım ve teklif

Listede olmayan ya da yüksek adetli parçalar için teklif isteyin.

Teklif isteyin

www.entegreci.com | **destek@entegreci.com** | **0850 305 90 34**

Entegreci is an online electronic components store based in Türkiye. Search by manufacturer part number to see stock, prices and datasheets for integrated circuits, microcontrollers, transistors, passive components and connectors, or request a quote for parts that are not listed.

Bu sayfa Entegreci tarafından eklenmiştir. Belgenin önceki sayfaları asıl yayıncısına aittir ve içeriği değiştirilmemiştir; en güncel sürüm için belgenin yayıncısına başvurun.