LOW DROPOUT VOLTAGE REGULATOR

■ GENERAL DESCRIPTION

NJU7771/72/73/74/75/76 is a low dropout voltage regulator designed for portable items.

Advanced CMOS technology achieves high ripple rejection and low quiescent current.

NJU7774/75/76 features shunt switch which improves turn off response of output voltage when ON/OFF control is used.

■ PACKAGE OUTLINE

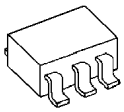

NJU777*F

■ FEATURES

- High Ripple Rejection 65dB typ. (f=1kHz,Vo=3.0V version)
- Low quiescent Current Iq=18μA (Io=0mA)
- Output capacitor with 1.0μF ceramic capacitor (Vo>2.0V version)
- Output Current Io(max.)=150mA
- High Precision Output Vo±1.0%
- Low Dropout Voltage 0.15V typ. (Io=100mA,Vo=3.0V)
- Input Voltage Range V_{IN}=+2.3V~9V(Vo≤2.0V version)
- ON/OFF Control (Active High)
- With Shunt Switch Only NJU7774/75/76
- Internal Short Circuit Current Limit
- Internal Thermal Overload Protection
- CMOS Technology
- Package Outline SOT-23-5

■ PIN CONFIGURATION

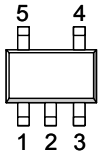

PIN FUNCTION

NJU7771F	NJU7772F	NJU7773F
1.CONTROL	1.V_{IN}	1.V_{OUT}
2.GND	2.GND	2.GND
3.NC	3.CONTROL	3.V_{IN}
4.V_{OUT}	4.NC	4.CONTROL
5.V_{IN}	5.V_{OUT}	5.NC

NJU7774F	NJU7775F	NJU7776F

■ EQUIVALENT CIRCUIT

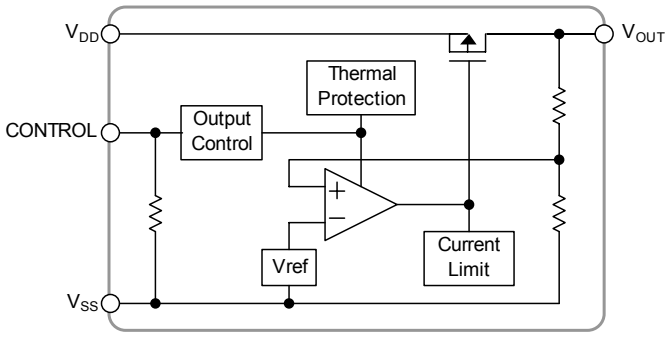

NJU7771/72/73

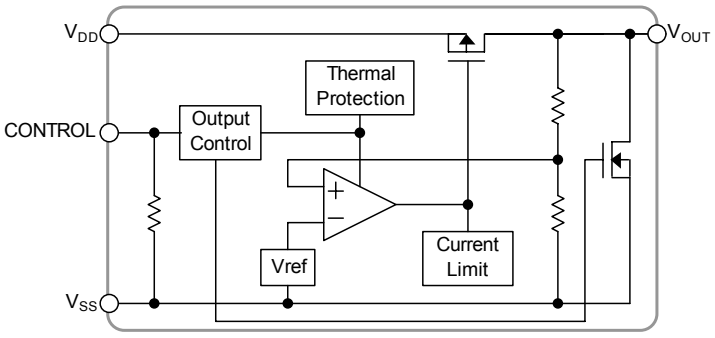

NJU7774/75/76

■ OUTPUT VOLTAGE RANK LIST

● NJU7771

Device Name	V_{OUT}	Device Name	V_{OUT}	Device Name	V_{OUT}	Device Name	V_{OUT}
NJU7771F15	1.5V	NJU7771F23	2.3V	NJU7771F32	3.2V	NJU7771F04	4.0V
NJU7771F18	1.8V	NJU7771F25	2.5V	NJU7771F33	3.3V	NJU7771F42	4.2V
NJU7771F19	1.9V	NJU7771F27	2.7V	NJU7771F35	3.5V	NJU7771F05	5.0V
NJU7771F21	2.1V	NJU7771F28	2.8V	NJU7771F36	3.6V		
NJU7771F22	2.2V	NJU7771F03	3.0V	NJU7771F38	3.8V		

● NJU7772

Device Name	V_{OUT}	Device Name	V_{OUT}	Device Name	V_{OUT}	Device Name	V_{OUT}
NJU7772F15	1.5V	NJU7772F23	2.3V	NJU7772F32	3.2V	NJU7772F04	4.0V
NJU7772F18	1.8V	NJU7772F25	2.5V	NJU7772F33	3.3V	NJU7772F42	4.2V
NJU7772F19	1.9V	NJU7772F27	2.7V	NJU7772F35	3.5V	NJU7772F05	5.0V
NJU7772F21	2.1V	NJU7772F28	2.8V	NJU7772F36	3.6V		
NJU7772F22	2.2V	NJU7772F03	3.0V	NJU7772F38	3.8V		

● NJU7773

Device Name	V_{OUT}	Device Name	V_{OUT}	Device Name	V_{OUT}	Device Name	V_{OUT}
NJU7773F15	1.5V	NJU7773F23	2.3V	NJU7773F32	3.2V	NJU7773F04	4.0V
NJU7773F18	1.8V	NJU7773F25	2.5V	NJU7773F33	3.3V	NJU7773F42	4.2V
NJU7773F19	1.9V	NJU7773F27	2.7V	NJU7773F35	3.5V	NJU7773F05	5.0V
NJU7773F21	2.1V	NJU7773F28	2.8V	NJU7773F36	3.6V		
NJU7773F22	2.2V	NJU7773F03	3.0V	NJU7773F38	3.8V		

● NJU7774

Device Name	V_{OUT}	Device Name	V_{OUT}	Device Name	V_{OUT}	Device Name	V_{OUT}
NJU7774F15	1.5V	NJU7774F25	2.5V	NJU7774F33	3.3V	NJU7774F05	5.0V
NJU7774F18	1.8V	NJU7774F27	2.7V	NJU7774F35	3.5V		
NJU7774F21	2.1V	NJU7774F28	2.8V	NJU7774F38	3.8V		
NJU7774F22	2.2V	NJU7774F03	3.0V	NJU7774F04	4.0V		
NJU7774F23	2.3V	NJU7774F32	3.2V	NJU7774F42	4.2V		

● NJU7775

Device Name	V_{OUT}	Device Name	V_{OUT}	Device Name	V_{OUT}	Device Name	V_{OUT}
NJU7775F15	1.5V	NJU7775F25	2.5V	NJU7775F33	3.3V	NJU7775F05	5.0V
NJU7775F18	1.8V	NJU7775F27	2.7V	NJU7775F35	3.5V		
NJU7775F21	2.1V	NJU7775F28	2.8V	NJU7775F38	3.8V		
NJU7775F22	2.2V	NJU7775F03	3.0V	NJU7775F04	4.0V		
NJU7775F23	2.3V	NJU7775F32	3.2V	NJU7775F42	4.2V		

● NJU7776

Device Name	V_{OUT}	Device Name	V_{OUT}	Device Name	V_{OUT}	Device Name	V_{OUT}
NJU7776F15	1.5V	NJU7776F25	2.5V	NJU7776F33	3.3V	NJU7776F05	5.0V
NJU7776F18	1.8V	NJU7776F27	2.7V	NJU7776F35	3.5V		
NJU7776F21	2.1V	NJU7776F28	2.8V	NJU7776F38	3.8V		
NJU7776F22	2.2V	NJU7776F03	3.0V	NJU7776F04	4.0V		
NJU7776F23	2.3V	NJU7776F32	3.2V	NJU7776F42	4.2V		

■ ABSOLUTE MAXIMUM RATINGS (Ta=25°C)

PARAMETER	SYMBOL	RATINGS		UNIT
Input Voltage	V_{IN}	+10		V
Control Voltage	V_{CONT}	+10(*1)		V
Power Dissipation	P_D	SOT-23-5	350(*2)	mW
			200(*3)	
Operating Temperature	Topr	−40 ~ +85		°C
Storage Temperature	Tstg	−40 ~ +125		°C
OFF-state Output Sink Current(*4)	I_O	10		mA

(*1): When input voltage is less than +10V, the absolute maximum control voltage is equal to the input voltage.

(*2) : Mounted on glass epoxy board based on EIA/JEDEC. (114.3x76.2x1.6mm: 2Layers)

(*3) : Device itself

(*4): This maximum rating is applied to NJU7774/75/76.

■ Operating voltage

V_{IN}=+2.3 ~ +9V (In case of Vo<2.1V version)

■ ELECTRICAL CHARACTERISTICS

(V_{IN}=Vo+1V, C_{IN}=0.1μF, Co=1.0μF(Co=2.2μF: Vo≤2.0V), Ta=25°C)

PARAMETER	SYMBOL	TEST CONDITION	MIN.	TYP.	MAX.	UNIT
Output Voltage	Vo	Io=30mA	-1.0%	–	+1.0%	V
Input Voltage	V_{IN}		–	–	9	V
Quiescent Current	I_Q	Io=0mA, V_{CONT}=V_{IN}	–	18	35	μA
Quiescent Current at Control OFF	$I_{Q(OFF)}$	V_{CONT}=0V	–	0.1	1	μA
Output Current	Io	Vo-0.1V (Vo≤2.0V) Vo-0.3V (Vo≥2.1V)	150	–	–	mA
Short Current Limit	I_{LIM}	Vo=0V	–	50	–	mA
Line Regulation	ΔVo/ΔV_{IN}	V_{IN}=Vo+1V ~ Vo+6.0V (Vo<3.0V) V_{IN}=Vo+1V ~ 9.0V (Vo≥3.0V), Io=30mA	–	–	0.20	%/V
Load Regulation	ΔVo/Δ Io	Io=0 ~ 100mA	–	–	0.03	%/mA
Dropout Voltage(*note 3)	ΔV_{I-O}	Io=100mA, 2.1V≤Vo≤2.4V	–	0.2	0.3	V
		Io=100mA, 2.5V≤Vo≤2.7V	–	0.18	0.28	V
		Io=100mA, 2.8V≤Vo≤3.3V	–	0.15	0.25	V
		Io=100mA, 3.4V≤Vo≤5.0V	–	0.12	0.22	V
Ripple Rejection	RR	ein=200mVrms,f=1kHz,Io=10mA, Vo=3.0V Version	–	65	–	dB
Average Temperature Coefficient of Output Voltage	ΔVo/Δ Ta	Ta=0 ~ 85°C, Io=10mA	–	±100	–	ppm/°C
Output Noise Voltage	V_{NO1}	f=10Hz ~ 80kHz,Io=0mA,Vo=3.0V Version	–	40	–	μVrms
	V_{NO2}	f=10Hz~80kHz,Io=10mA,Vo=3.0V Version	–	70	–	μVrms
Pull-down Resistance	R_{CONT}		2	5	10	MΩ
Control Voltage for ON-state	$V_{CONT(ON)}$		1.6	–	–	V
Control Voltage for OFF-state	$V_{CONT(OFF)}$		–	–	0.3	V
Pull-down Resistance at OFF-state(*6)	$R_{O(OFF)}$	V_{CONT}=0V (V_O=3.0V Version)	–	120	–	Ω

(*5): Except output voltage less than 2.1V.

(*6) This electrical characteristics is applied to NJU7774/75/76.

The above specification is a common specification for all output voltages.

Therefore, it may be different from the individual specification for a specific output voltage.

■ TEST CIRCUIT

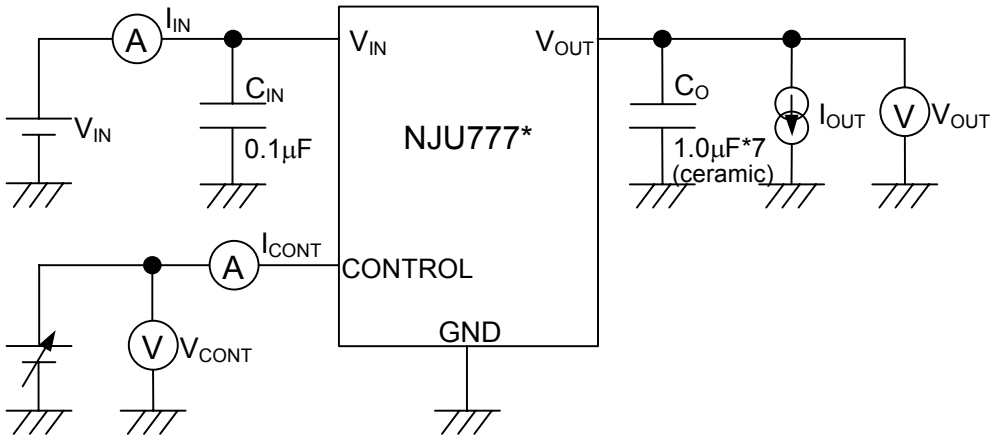

*7 Vo≤2.0V version: Co=2.2μF(ceramic)

■ POWER DISSIPATION vs. AMBIENT TEMPERATURE

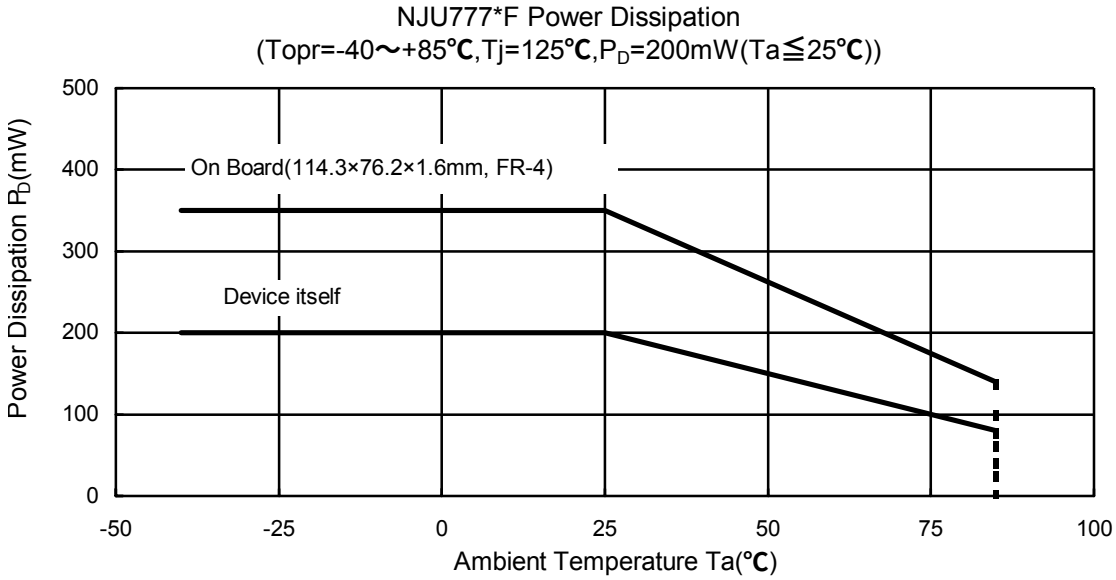

■ TYPICAL APPLICATION

① In case that ON/OFF Control is not required:

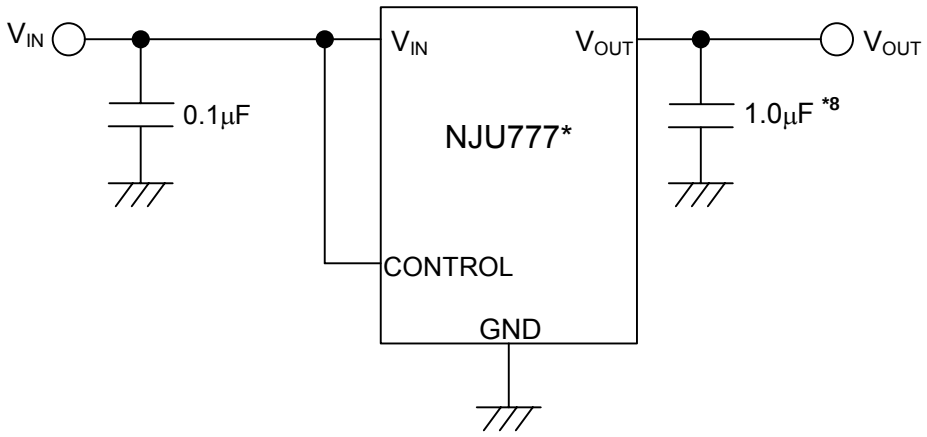

*8 Vo≤2.0V version: Co=2.2μF

Connect control terminal to V_{IN} terminal.

② In use of ON/OFF Control

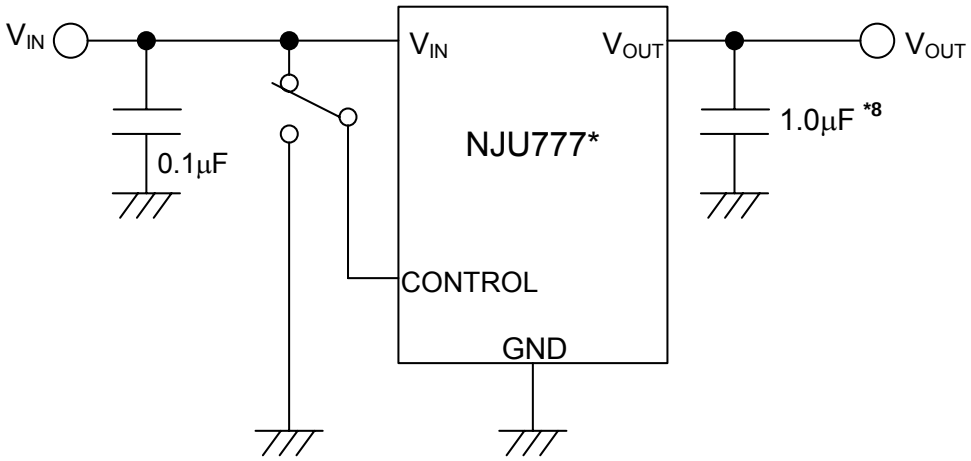

*8 Vo≤2.0V version: Co=2.2μF

State of control terminal:

- "H" → output is enabled.
- "L" or "open" → output is disabled.

*Input Capacitor C_{IN}

Input Capacitor C_{IN} is required to prevent oscillation and reduce power supply ripple for applications when high power supply impedance or a long power supply line.

Therefore, use the recommended C_{IN} value (refer to conditions of ELECTRIC CHARACTERISTIC) or larger and should connect between GND and V_{IN} as shortest path as possible to avoid the problem.

*Output Capacitor C_O

Output capacitor (C_O) will be required for a phase compensation of the internal error amplifier.

The capacitance and the equivalent series resistance (ESR) influence to stable operation of the regulator.

Use of a smaller C_O may cause excess output noise or oscillation of the regulator due to lack of the phase compensation.

On the other hand, Use of a larger C_O reduces output noise and ripple output, and also improves output transient response when rapid load change.

Therefore, use the recommended C_O value (refer to conditions of ELECTRIC CHARACTERISTIC) or larger and should connect between GND and V_{OUT} as shortest path as possible for stable operation

The recommended capacitance depends on the output voltage rank. Especially, low voltage regulator requires larger C_O value.

In addition, you should consider varied characteristics of capacitor (a frequency characteristic, a temperature characteristic, a DC bias characteristic and so on) and unevenness peculiar to a capacitor supplier enough.

When selecting C_O, recommend that have withstand voltage margin against output voltage and superior temperature characteristic though this product is designed stability works with wide range ESR of capacitor including low ESR products.

■ ELECTRICAL CHARACTERISTICS

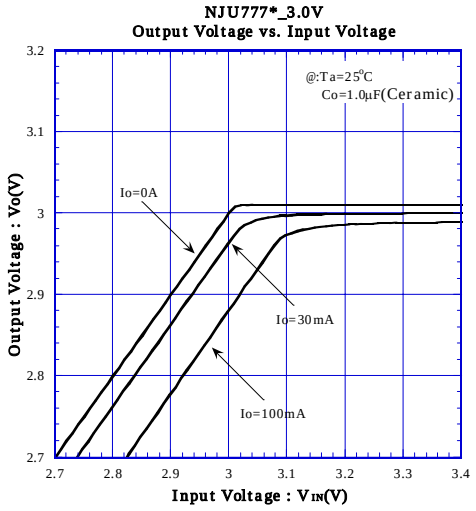

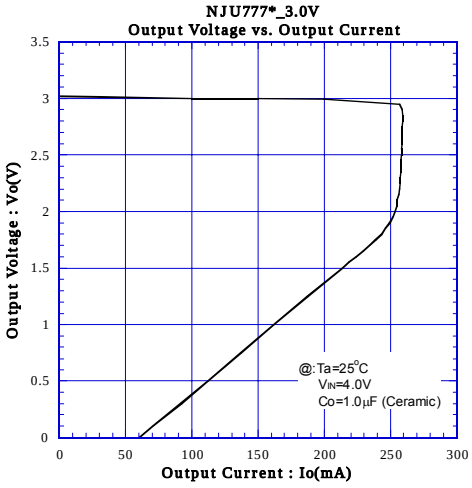

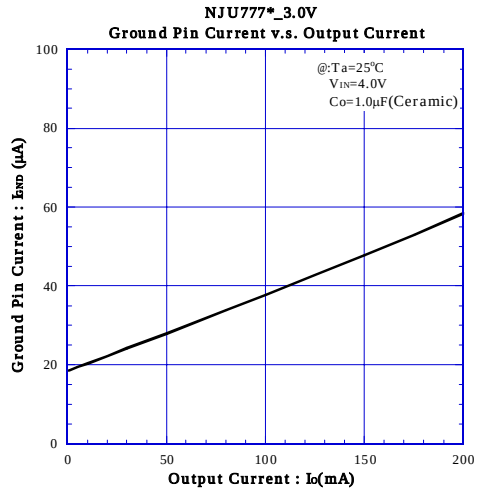

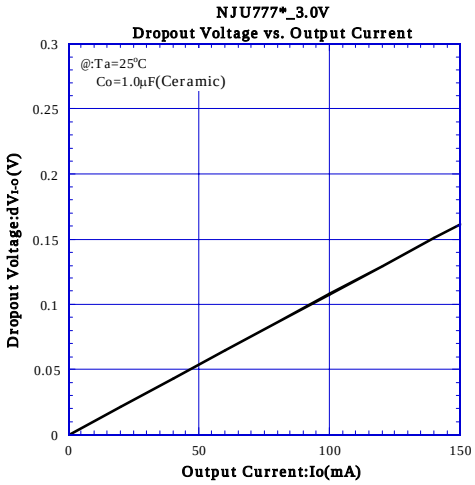

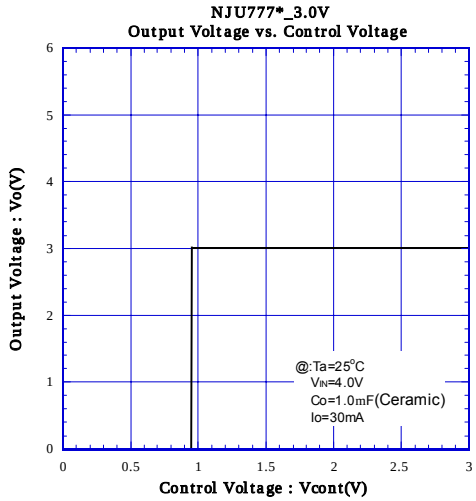

■ ELECTRICAL CHARACTERISTICS

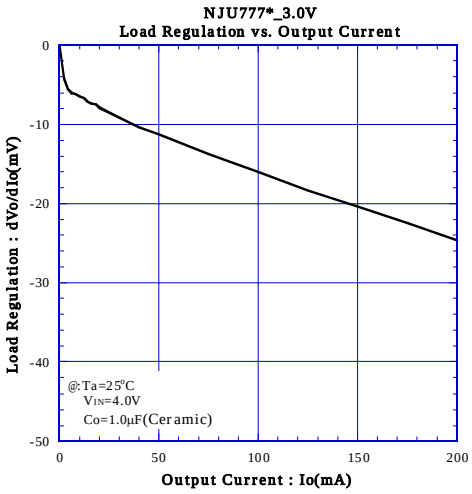

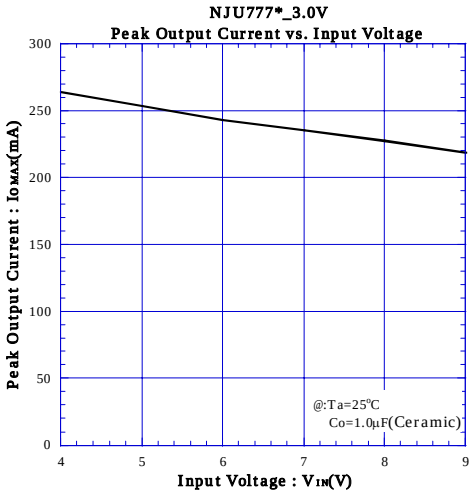

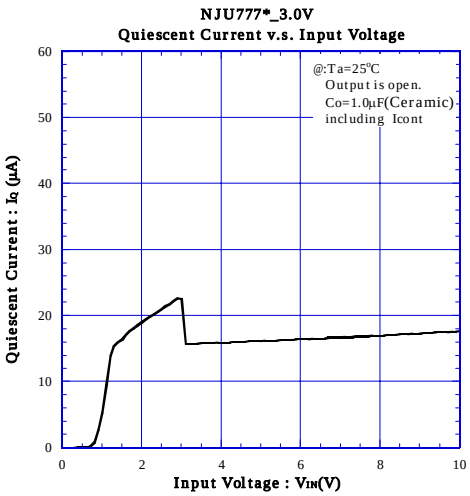

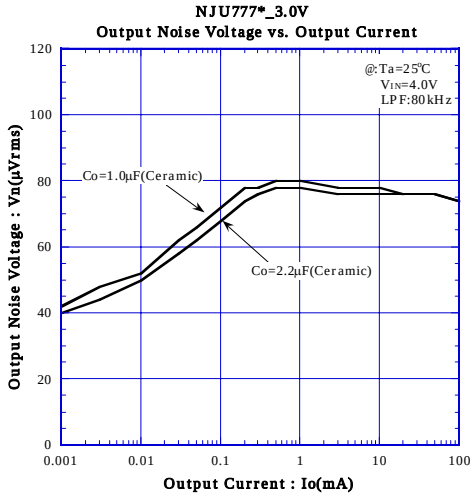

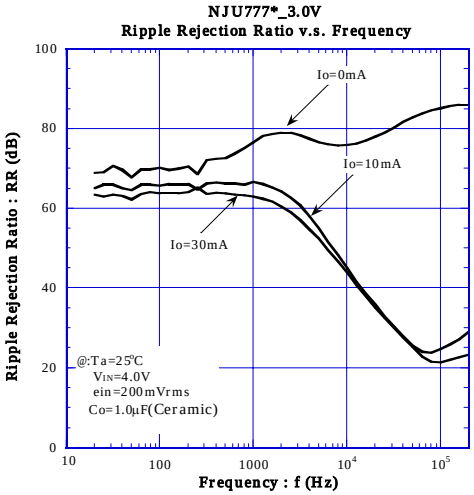

■ ELECTRICAL CHARACTERISTICS

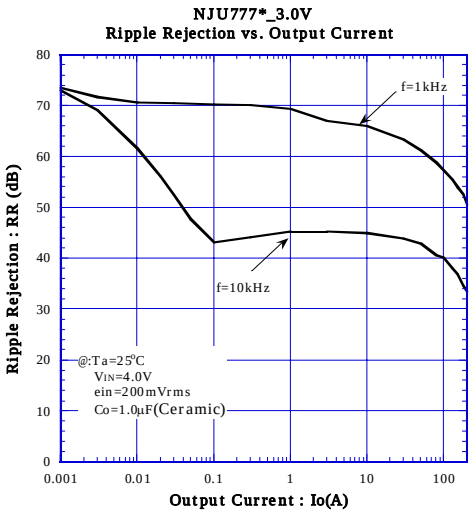

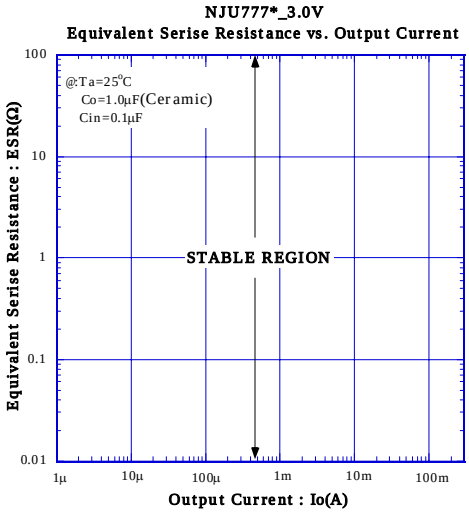

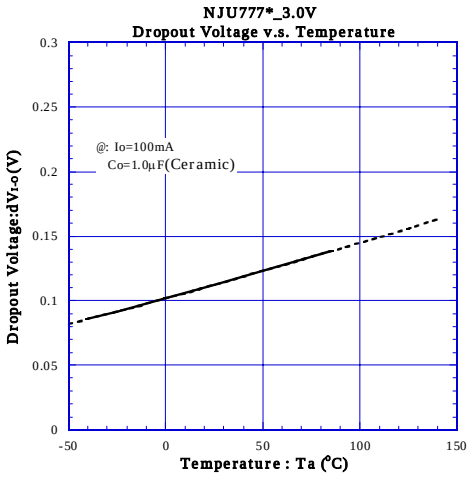

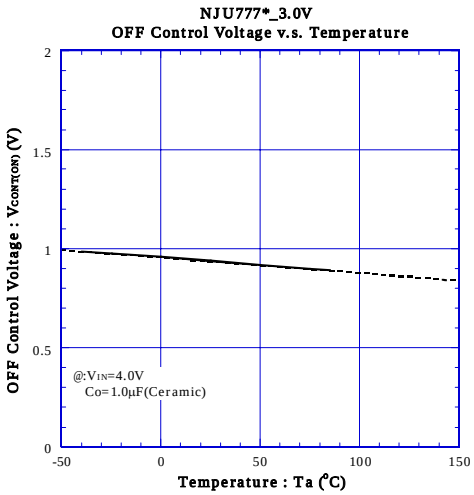

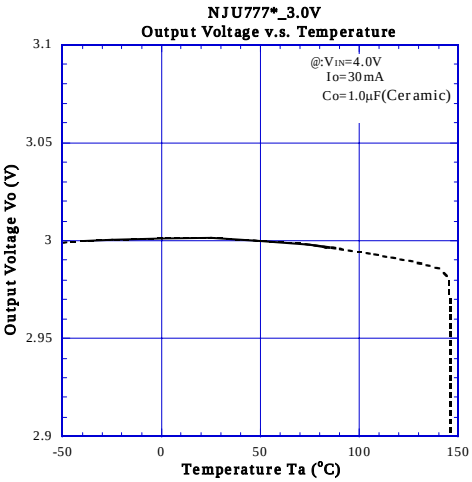

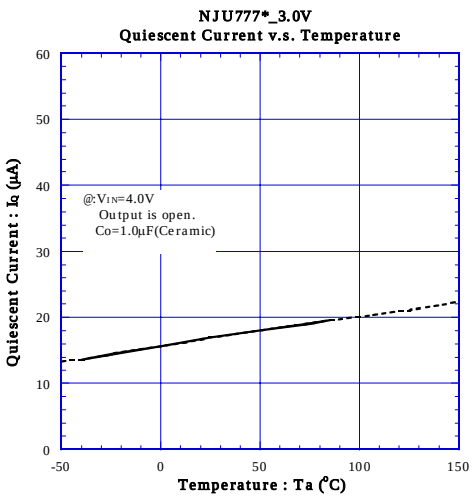

■ ELECTRICAL CHARACTERISTICS

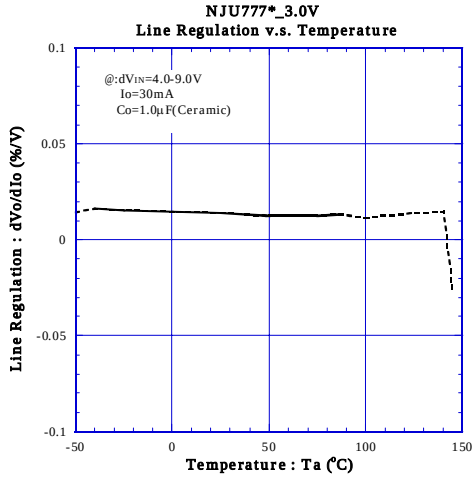

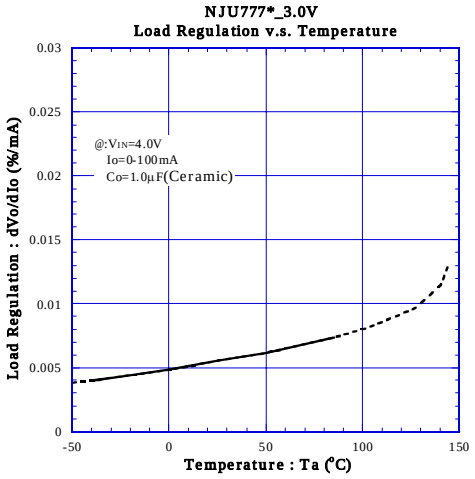

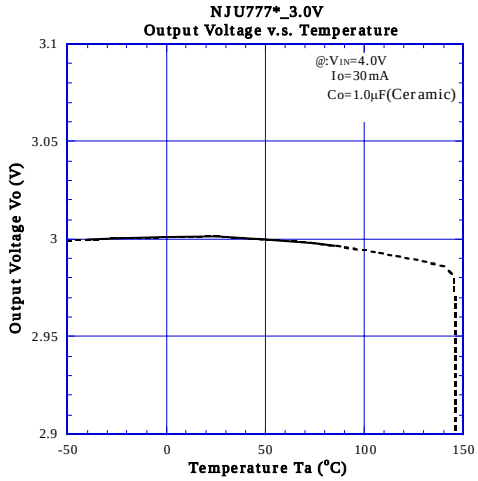

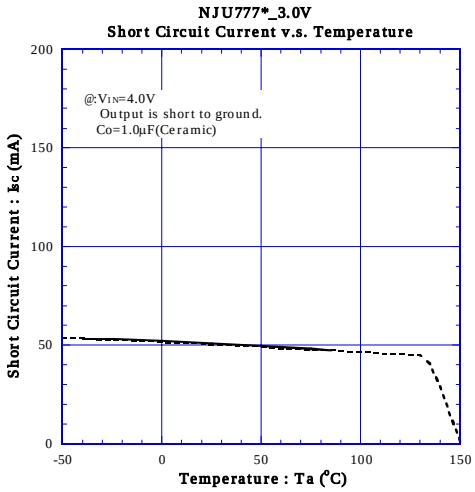

■ ELECTRICAL CHARACTERISTICS

NJU777*_3.0V
ON/OFF Transient Response

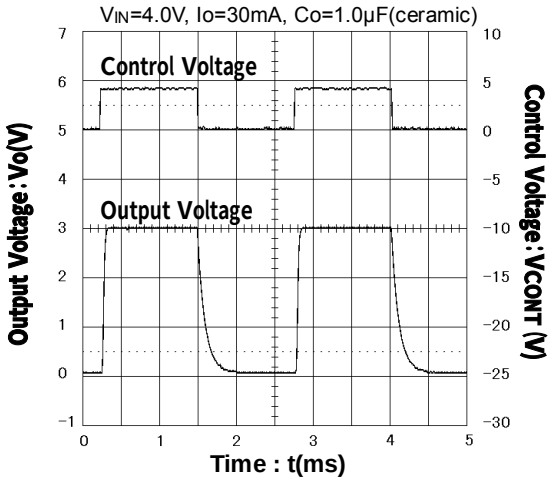

NJU777*_3.0V
ON/OFF Transient Response without Load

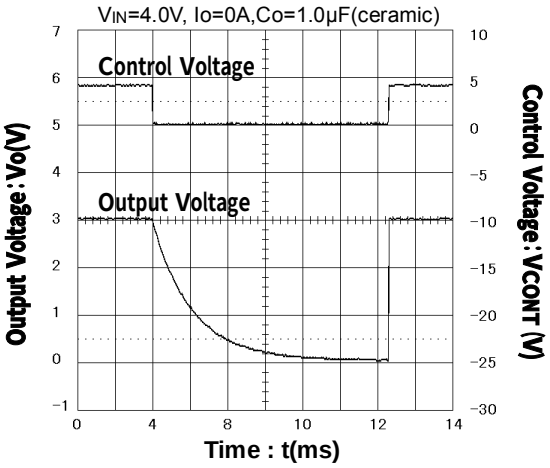

NJU777*_3.0V
ON/OFF Transient Response without Load

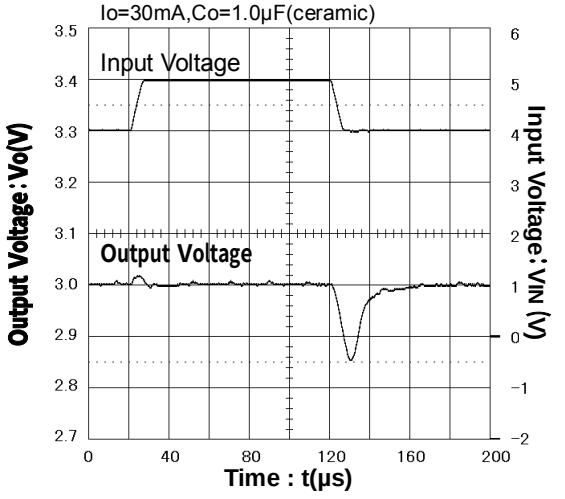

NJU777*_3.0V
ON/OFF Transient Response without Load

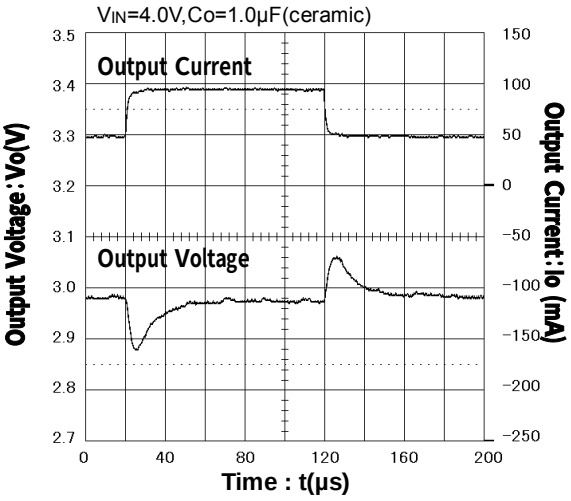

[CAUTION]
The specifications on this databook are only given for information , without any guarantee as regards either mistakes or omissions. The application circuits in this databook are described only to show representative usages of the product and not intended for the guarantee or permission of any right including the industrial rights.

ENTEGRECİ

Bu belge www.entegreci.com üzerinden sunulmaktadır.

Elektronik komponent tedarikinde Entegreci

Entegreci, Eskişehir merkezli, Türkiye geneline satış yapan bir elektronik komponent mağazasıdır. Entegreler (IC), mikrodenetleyiciler, transistörler, diyotlar, pasif elemanlar, konnektörler, modüller ve geliştirme kartları tek adetten seri üretim adetlerine kadar satılır. Ürün sayfalarında güncel stok durumunu, fiyatı ve datasheet bağlantısını bulabilirsiniz.

Parça koduyla arama

Üretici parça numarasını yazın; stok ve fiyatı hemen görün.

www.entegreci.com

Ürün kategorileri

Entegreden kapasitöre tüm elektronik komponent kategorileri.

Kategorilere göz atın

Üreticiler

Aradığınız üreticinin ürünlerini tek sayfada inceleyin.

Üreticileri görün

Toplu alım ve teklif

Listede olmayan ya da yüksek adetli parçalar için teklif isteyin.

Teklif isteyin

www.entegreci.com | **destek@entegreci.com** | **0850 305 90 34**

Entegreci is an online electronic components store based in Türkiye. Search by manufacturer part number to see stock, prices and datasheets for integrated circuits, microcontrollers, transistors, passive components and connectors, or request a quote for parts that are not listed.

Bu sayfa Entegreci tarafından eklenmiştir. Belgenin önceki sayfaları asıl yayıncısına aittir ve içeriği değiştirilmemiştir; en güncel sürüm için belgenin yayıncısına başvurun.