45V Io=200mA Ultra low Quiescent current LDO

■FEATURES

- AEC-Q100 grade 1 (T1 specification only)
- Low Quiescent Current 5.5μA typ.(A version)
  5.0μA typ.(B version)
- Operating Voltage 4.0V to 40V
- Operating Temperature Ta=-40°C to 125°C
- Output Voltage Accuracy V_O ±1.0%(Ta=25°C)
  V_O ±2.0%(Ta=-40°C to 125°C)
- Output Current I_O(min.)=200mA
- ON/OFF Control A ver. only
- Correspond to MLCC
- Under Voltage Lock Out circuit
- Thermal Shutdown Circuit
- Over Current Protection Circuit
- Package Outline A ver. SOT-89-5-2
  B ver. SOT-89-3, TO-252-3-L1

■GENERAL DESCRIPTION

NJW4104 is a 45V Io=200mA ultra low quiescent current low dropout regulator.

It achieves low quiescent current characteristics, therefore it contributes to reduce current consumption of applications.

Output Voltage is guaranteed ±2% under wide range conditions: V_{IN}=Vo+1V to 40V, Io=0 to 200mA and Ta=-40°C to 125°C.

Because of wide input voltage range and wide operating temperature range, the NJW4104 is suitable for various applications including automotive applications.

■APPLICATION

- Automotive infotainment
- Automotive ECU unit
- Industrial equipment

■TYPICAL APPLICATION

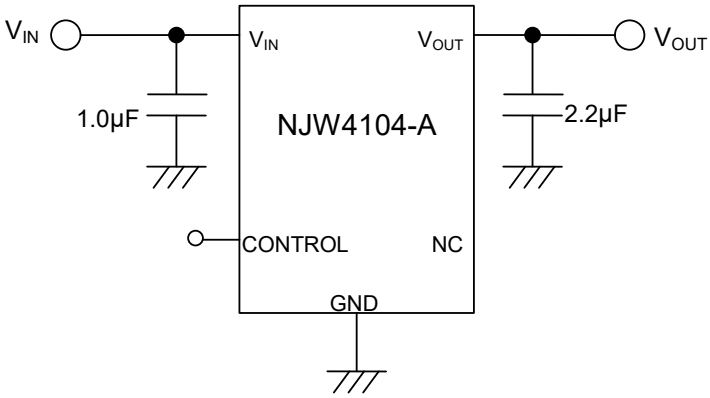

■BLOCK DIAGRAM

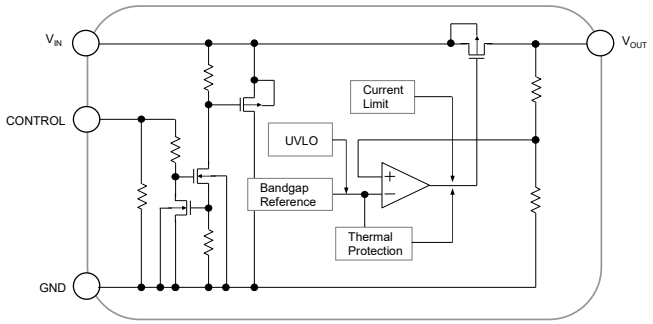

A version

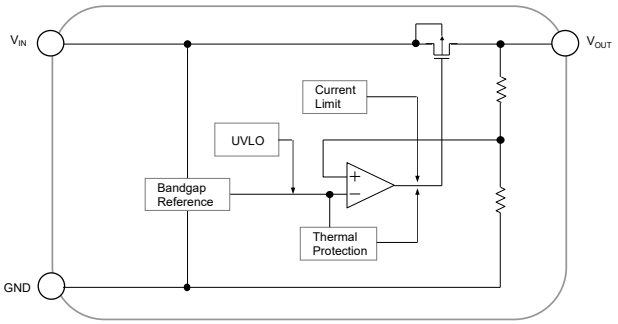

B version

■OUTPUT VOLTAGE RANK

SOT-89-5-2 SOT-89-3 TO-252-3-L1

PART NUMBER	OUTPUT VOLTAGE	PART NUMBER	OUTPUT VOLTAGE	PART NUMBER	OUTPUT VOLTAGE
NJW4104U2-33A / -T1	3.3V	NJW4104U3-33B / -T1	3.3V	NJW4104DL1-33B	3.3V
NJW4104U2-05A / -T1	5.0V	NJW4104U3-05B / -T1	5.0V	NJW4104DL1-05B	5.0V

■PIN CONFIGURATION

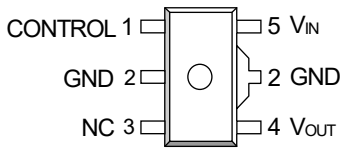

SOT-89-5-2

PIN NO.	SYMBOL	DESCRIPTION
1	CONTROL	ON/OFF Control
2	GND	Ground
3	NC	No Connection*
4	V_{OUT}	Output
5	V_{IN}	Input

*Note) NC pin is not connect to internally circuit. This pin can be open or connected to ground. Connecting to ground is recommended to improve thermal dissipation.

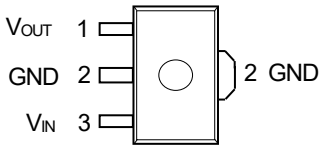

SOT-89-3

PIN NO.	SYMBOL	DESCRIPTION
1	V_{OUT}	Output
2	GND	Ground
3	V_{IN}	Input

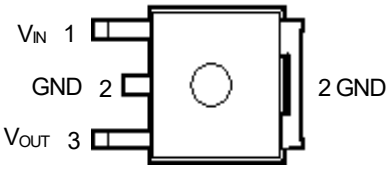

TO-252-3-L1

PIN NO.	SYMBOL	DESCRIPTION
1	V_{IN}	Input
2	GND	Ground
3	V_{OUT}	Output

■PRODUCT NAME INFORMATION

NJW4104 U2 - 05 A - T1 (TE1)

Device Name	Package	Output	Version	Spec	Taping form
	U2: SOT-89-5-2	Voltage	A: ON/OFF	T1: Automotive	
	U3: SOT-89-3	33: 3.3V	B: without ON/OFF		
	DL1: TO-252-3-L1	05: 5.0V			

■ORDERING INFORMATION

PRODUCT NAME	OUTPUT VOLTAGE	PACKAGE OUTLINE	AUTOMOTIVE SPEC	RoHS	HALOGEN -FREE	TERMINAL FINISH	MARKING	WEIGHT (mg)	MOQ (pcs)
NJW4104U2-33A(TE1)	3.3V	SOT-89-5-2	-	yes	yes	Sn-2Bi	231	61	1000
NJW4104U2-05A(TE1)	5.0V	SOT-89-5-2	-	yes	yes	Sn-2Bi	241	61	1000
NJW4104U2-33A-T1(TE1)	3.3V	SOT-89-5-2	yes	yes	yes	Sn-2Bi	251	61	1000
NJW4104U2-05A-T1(TE1)	5.0V	SOT-89-5-2	yes	yes	yes	Sn-2Bi	261	61	1000
NJW4104U3-33B(TE1)	3.3V	SOT-89-3	-	yes	yes	Sn-2Bi	33S	61	1000
NJW4104U3-05B(TE1)	5.0V	SOT-89-3	-	yes	yes	Sn-2Bi	50S	61	1000
NJW4104U3-33B-T1(TE1)	3.3V	SOT-89-3	yes	yes	yes	Sn-2Bi	33U	61	1000
NJW4104U3-05B-T1(TE1)	5.0V	SOT-89-3	yes	yes	yes	Sn-2Bi	50U	61	1000
NJW4104DL1-33B(TE1)	3.3V	TO-252-3-L1	-	yes	yes	Sn-2Bi	04B33	301	3000
NJW4104DL1-05B(TE1)	5.0V	TO-252-3-L1	-	yes	yes	Sn-2Bi	04B05	301	3000

Note) "-" is non-evaluation. Please contact your sales representative for more information. Note) AEC-Q100 grade 1 T1 specification only

■ABSOLUTE MAXIMUM RATINGS

PARAMETER	SYMBOL	RATINGS	UNIT
Input Voltage	V_{IN}	-0.3 to +45	V
Control Pin Voltage(1)	V_{CONT}	-0.3 to +45	V
Output Voltage	V_{OUT}	-0.3 to V_{IN} ≤ +17	V
Power Dissipation(Ta=25°C)	P_D	(2-layer / 4-layer)	mW
SOT-89		625(2)/ 2400(3)	
TO-252		1190(2)/ 3125(3)	
Junction Temperature Range	Tj	-40 to +150	°C
Operating Temperature Range	T_{opr}	-40 to +125	°C
Storage Temperature Range	T_{stg}	-50 to +150	°C

(1): Applied for A version.

(2): Mounted on glass epoxy board. (76.2×114.3×1.6mm: based on EIA/JEDEC standard, 2Layers)

(3): Mounted on glass epoxy board. (76.2×114.3×1.6mm: based on EIA/JEDEC standard, 4Layers), internal Cu area: 74.2x74.2mm
(For 4Layers :Applying 74.2 x 74.2mm inner Cu area and thermal via holes to board based on JEDEC standard JESD51-5)

■RECOMMENDED OPERATING CONDITIONS

PARAMETER	SYMBOL	VALUE	UNIT
Operating Voltage Range	V_{IN}	4.0 to 40	V
Control Voltage	V_{CONT}	0 to 40	V

■ELECTRICAL CHARACTERISTICS

Unless other noted, V_{IN} = V_O + 1V, C_{IN} = 1.0µF, C_O =2.2µF, Ta = 25°C

PARAMETER	SYMBOL	TEST CONDITION		MIN.	TYP.	MAX.	単位
Output Voltage	V_O	V_{IN} =Vo+1V to 40V, I_O =0mA to 200mA,		-1.0%	-	+1.0%	V
		V_{IN} =Vo+1V to 40V, I_O =0mA to 200mA, Ta=-40°C to +125°C		-2.0%	-	+2.0%	
Quiescent Current	I_Q	A version, I_O =0mA, except I_{CONT}		-	5.5	9.5	µA
		A version, I_O =0mA, except I_{CONT}, Ta =-40°C to +125°C		-	-	13.5	
		B version, I_O =0mA		-	5.0	8.5	
		B version, I_O =0mA,Ta=-40°C to +125°C		-	-	12	
Quiescent Current at Control OFF (4)	$I_{Q(OFF)}$	V_{CONT}=0V		-	-	1	µA
		V_{CONT}=0V, Ta=-40°C to +125°C		-	-	1	
Output Current	I_O	$V_O \times 0.9$		200	-	-	mA
		$V_O \times 0.9$, Ta=-40°C to +125°C		200	-	-	
Line Regulation	$\Delta V_O/\Delta V_{IN}$	V_{IN}= V_O +1V to 40V, I_O =30mA	V_O=3.3V	-	-	23.5	mV
			V_O=5.0V	-	-	34	
		V_{IN}= V_O +1V to 40V, I_O =30mA, Ta=-40°C to +125°C	V_O=3.3V	-	-	35.3	
			V_O=5.0V	-	-	51	
Load Regulation	$\Delta V_O/\Delta I_O$	I_O =0mA to 200mA	V_O=3.3V	-	-	15.2	mV
			V_O=5.0V	-	-	23	
		I_O =0mA to 200mA, Ta=-40°C to +125°C	V_O=3.3V	-	-	26.4	
			V_O=5.0V	-	-	40	
Ripple Rejection	RR	V_{IN}=7.0V ,ein=200mVrms, f=1kHz, I_O =10mA	V_O=3.3V	-	41	-	dB
			V_O=5.0V	-	36	-	
Dropout Voltage (5)	ΔV_{IO}	I_O=100mA		-	0.18	0.25	V
		I_O=100mA, Ta=-40°C to +125°C		-	-	0.46	
Control Current (4)	I_{CONT}	V_{CONT}=1.6V		-	0.5	2	µA
		V_{CONT}=1.8V, Ta=-40°C to +125°C		-	-	3	
Control Voltage for ON-state (4)	$V_{CONT(ON)}$			1.6	-	-	V
		Ta=-40°C to +125°C		1.8	-	-	
Control Voltage for OFF-state (4)	$V_{CONT(OFF)}$			-	-	0.6	V
		Ta=-40°C to +125°C		-	-	0.6	
UVLO Release Voltage	V_{UVLO}	V_{IN} =L→H		2.4	2.8	3.3	V
		V_{IN} =L→H, Ta=-40°C to +125°C		2.1	-	3.5	
UVLO Hysteresis Voltage	V_{HYS}	V_{IN} =H→L		70	200	-	mV
		V_{IN} =H→L, Ta=-40°C to +125°C		70	-	-	
Average Temperature Coefficient of Output Voltage	$\Delta V_O/\Delta Ta$	Ta=-40°C to 125°C, I_O =30mA		-	±50	-	ppm/°C

(4): Applied for A version.

(5): Except Output Voltage Rank less than 3.8V

Characteristics values of defined as Ta=-40°C to +125°C are applied only “T1”spec.

■THERMAL CHARACTERISTICS

PARAMETER	SYMBOL	VALUE		UNIT
Junction-to-ambient thermal resistance	θja	SOT-89-3/-5-2	200(6) 52(7)	°C/W
		TO-252-3-L1	105(6) 40(7)	
Junction-to-Top of package characterization parameter	ψjt	SOT-89-3/-5-2	43(6) 19(7)	°C/W
		TO-252-3-L1	17(6) 12(7)	

(6): Mounted on glass epoxy board. (76.2×114.3×1.6mm: based on EIA/JEDEC standard, 2Layers)

(7): Mounted on glass epoxy board. (76.2´114.3´1.6mm: based on EIA/JEDEC standard, 4Layers), internal Cu area: 74.2x74.2mm
(For 4Layers :Applying 74.2 x 74.2mm inner Cu area and thermal via holes to board based on JEDEC standard JESD51-5)

■POWER DISSIPATION vs. AMBIENT TEMPERATURE

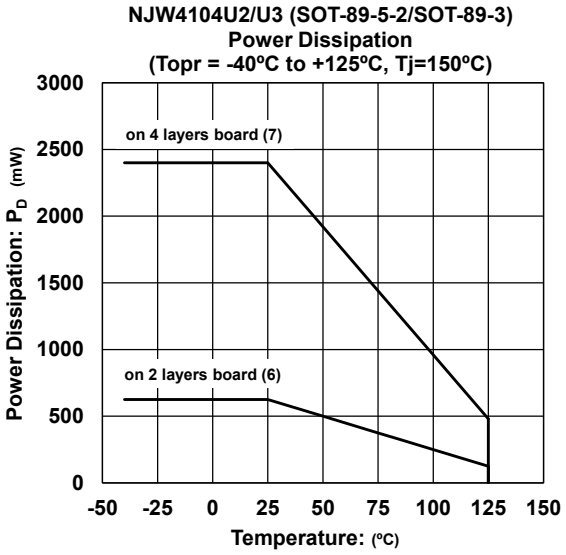

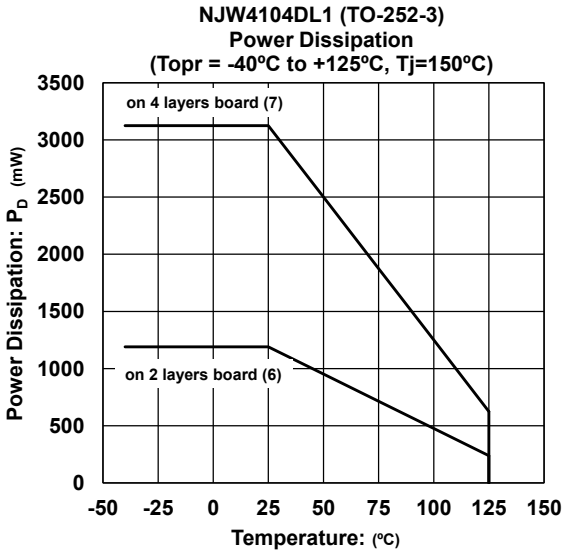

*Input Capacitor C_{IN}

The input capacitor C_{IN} is required in order to prevent oscillation and reduce power supply ripple of applications when high power supply impedance or a long power supply line.

Therefore, the recommended capacitance (refer to conditions of ELECTRIC CHARACTERISTIC) or larger input capacitor, connected between V_{IN} and GND as short path as possible, is recommended in order to avoid the problem.

*Output Capacitor C_O

The output capacitor C_O is required for a phase compensation of the internal error amplifier, and the capacitance and the equivalent series resistance (ESR) influence stable operation of the regulator.

If use a smaller output capacitor than the recommended capacitance (refer to conditions of ELECTRIC CHARACTERISTIC), it may cause excess output noise or oscillation of the regulator due to lack of the phase compensation. Therefore, the recommended capacitance or larger output capacitor, connected between V_{OUT} and GND as short path as possible, is recommended for stable operation. The recommended capacitance may be different by output voltage, therefore confirm the recommended capacitance of the required output voltage.

Furthermore, a larger output capacitor reduces output noise and ripple output, and also improves Output Transient Response when a load changes rapidly.

Selecting the output capacitor, should consider varied characteristics of a capacitor: frequency characteristics, temperature characteristics, DC bias characteristics and so on. Therefore, the capacitor that has a sufficient margin of the rated voltage against the output voltage and superior temperature characteristics, is recommended for C_O.

*Transient Response of Output Voltage

In general, the regulator tends to cause overshoot or undershoot of output voltage at the following conditions.

Particularly in products featuring low current consumption, the output voltage fluctuation may become large due to product characteristics.

- When input voltage or output current fluctuate sharply
- When output capacitance is small
- When output load is light
- When start up from the condition of narrow voltage difference between an Input and an output.

One way to improve transient response is to use a large capacity input and output capacitors to suppress to the fluctuation.

Amount of transient fluctuation will change according to multiple conditions, so please refer to the above to confirm with actual equipment.

■TYPICAL CHARACTERISTICS

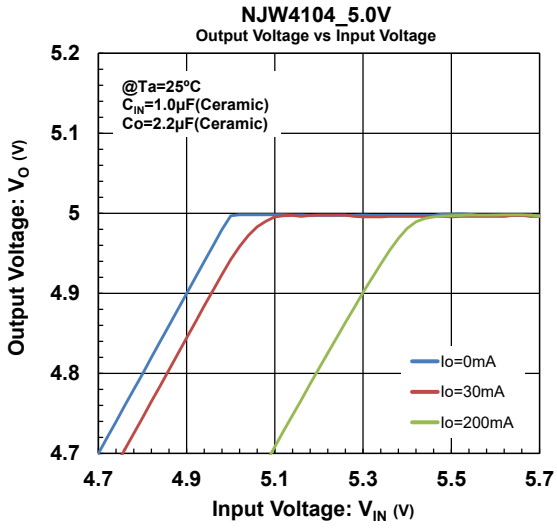

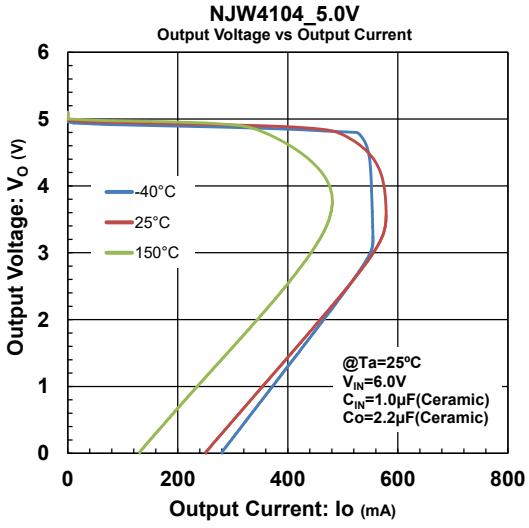

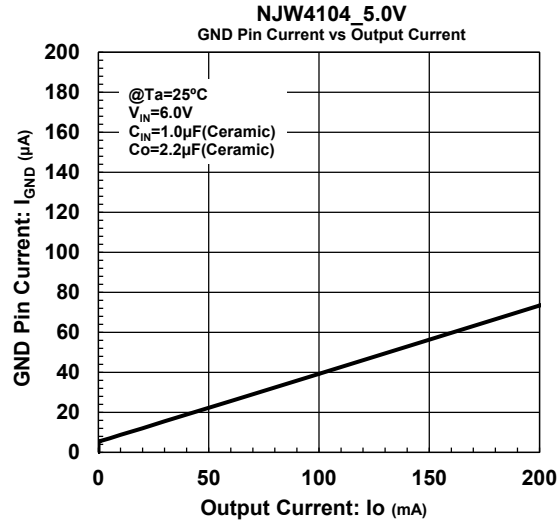

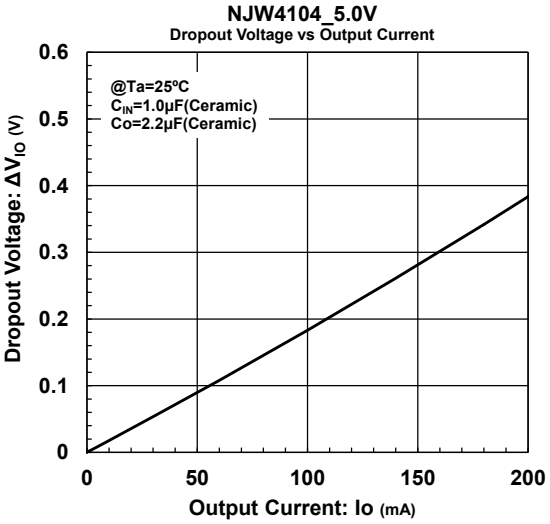

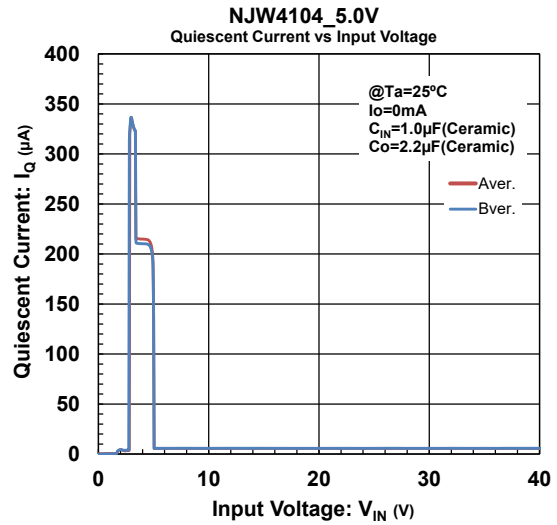

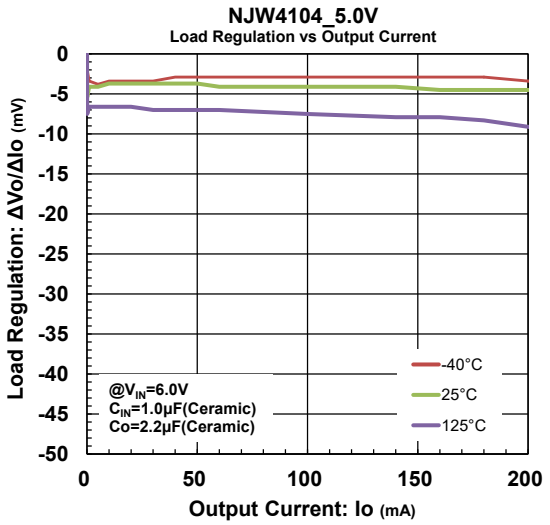

NJW4104_5.0V
Output Voltage vs Control Voltage

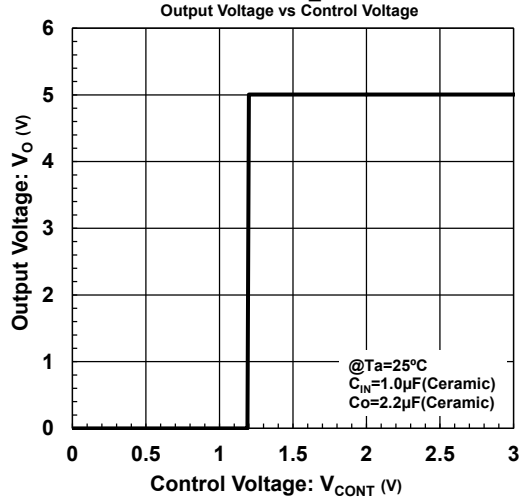

NJW4104_5.0V
Control Current vs Control Voltage

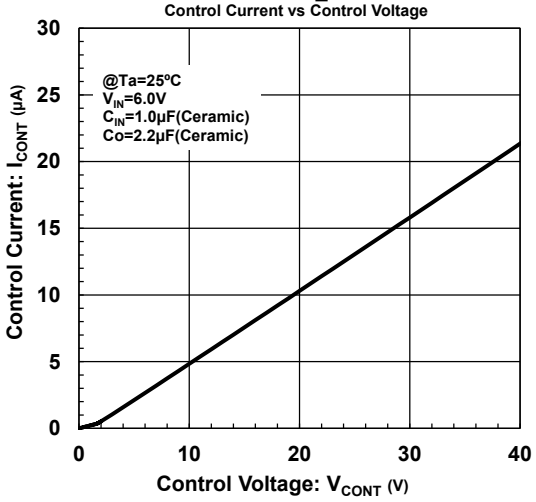

NJW4104_5.0V
Peak Output Current vs Input Voltage

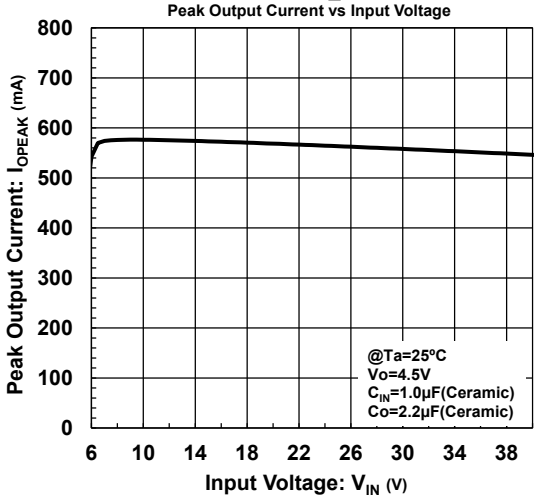

NJW4104_5.0V
Short Circuit Current vs Input Voltage

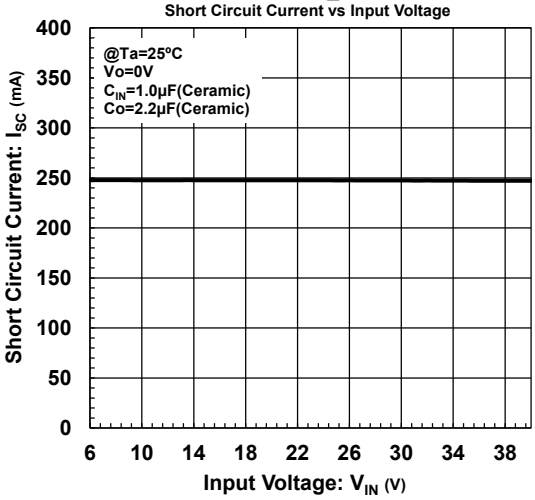

NJW4104_5.0V
Ripple Rejection vs Frequency

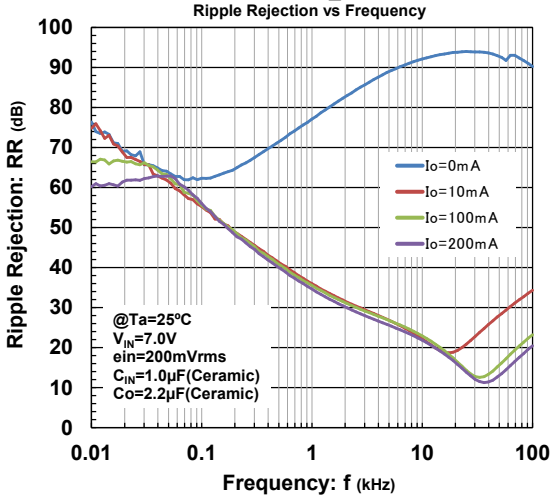

NJW4104_5.0V
Ripple Rejection vs Output Current

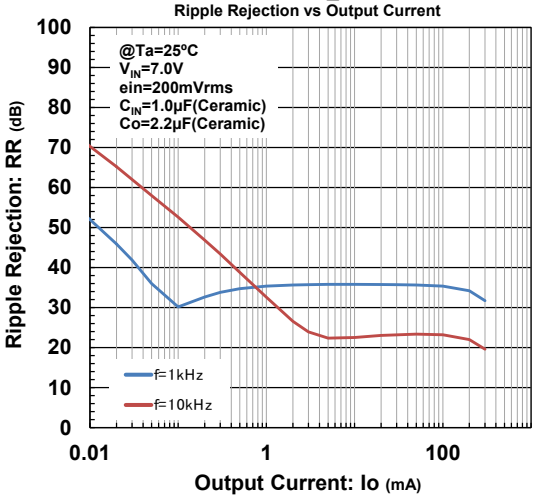

NJW4104_5.0V
Equivalent Series Resistance vs Output Current

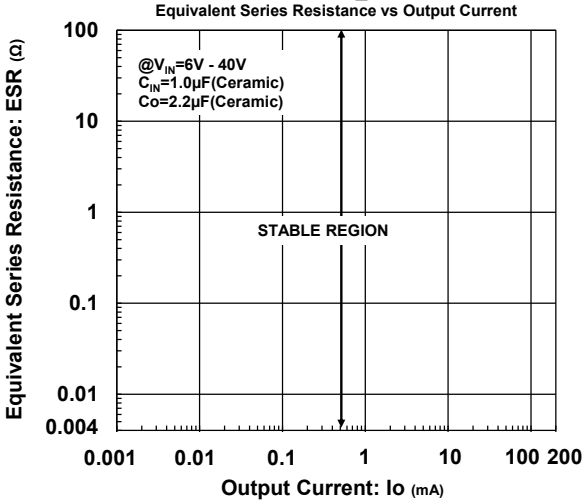

NJW4104_5.0V
Output Voltage vs Temperature

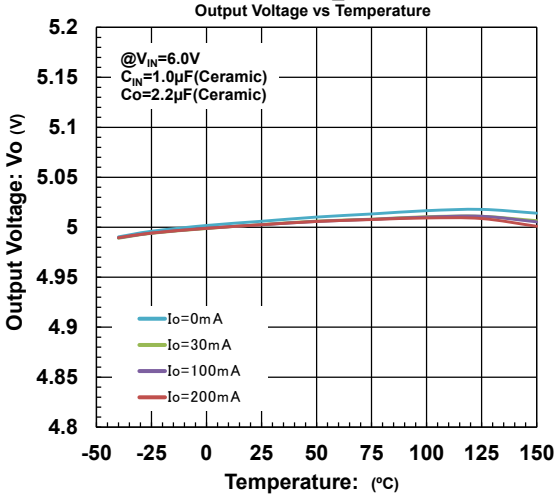

NJW4104_5.0V
Control Voltage vs Temperature

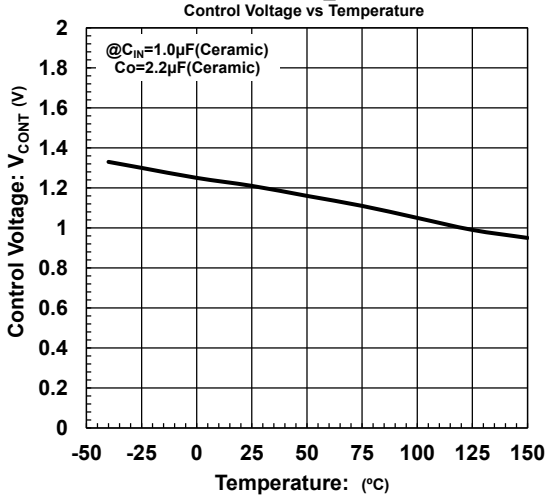

NJW4104_5.0V
Control Current vs Temperature

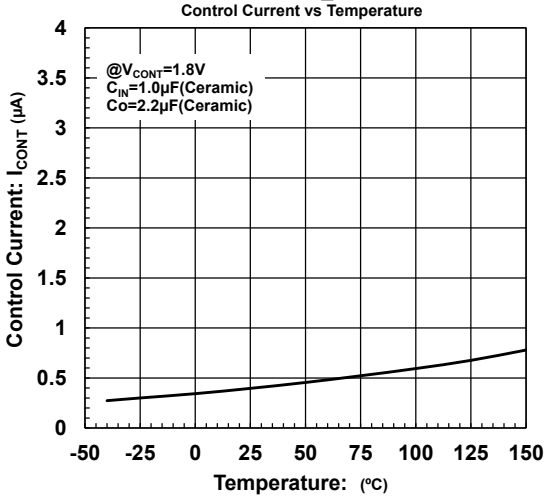

NJW4104_5.0V
Peak Output Current vs Temperature

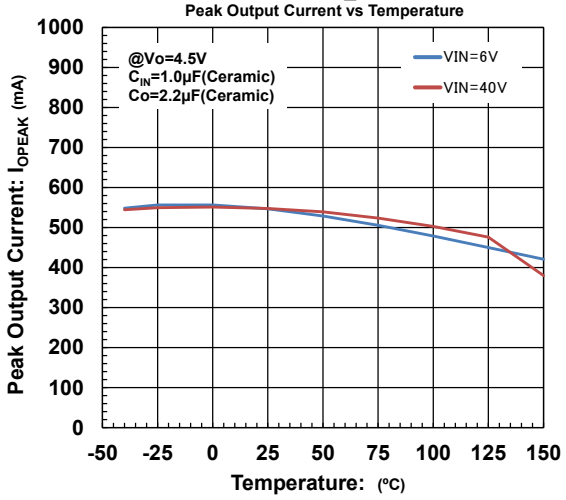

NJW4104_5.0V
Short Circuit Current vs Temperature

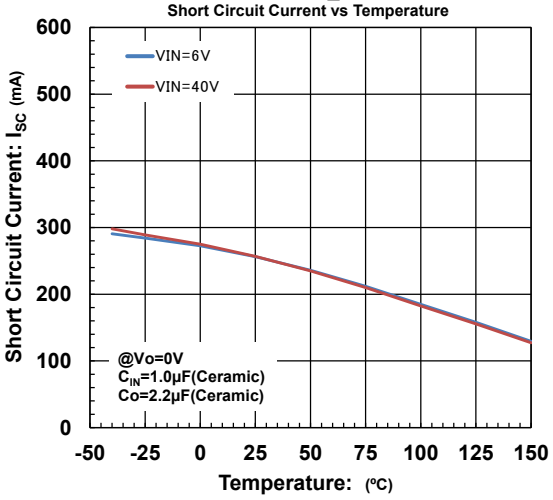

NJW4104_5.0V
Output Voltage vs Temperature

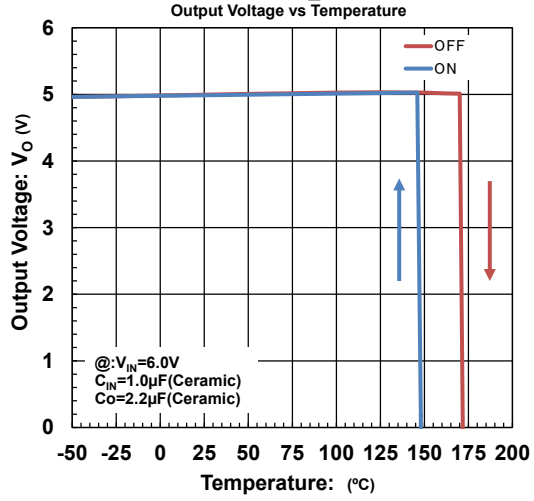

NJW4104_5.0V
Dropout Voltage vs Temperature

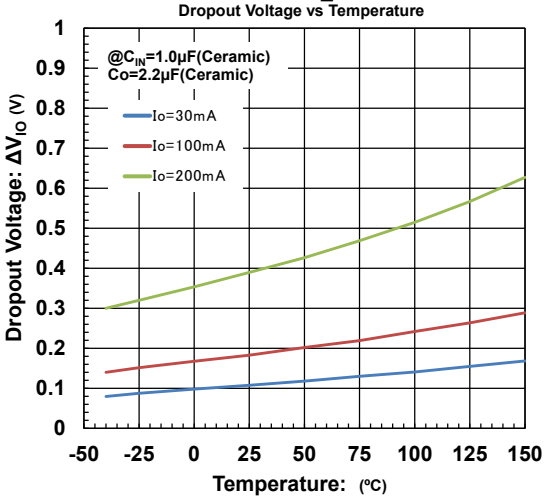

NJW4104_5.0V
Quiescent Current vs Temperature

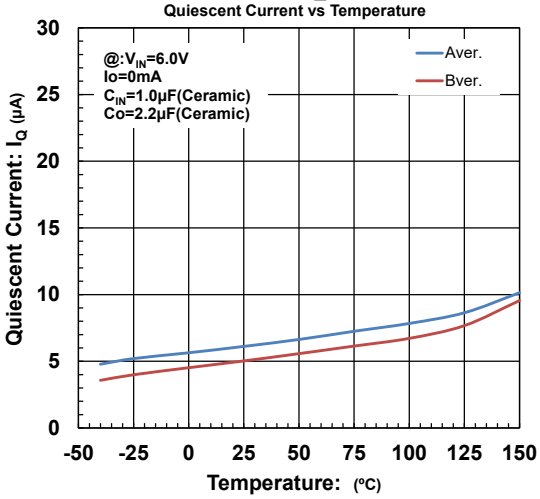

NJW4104_5.0V
Load Transient Response

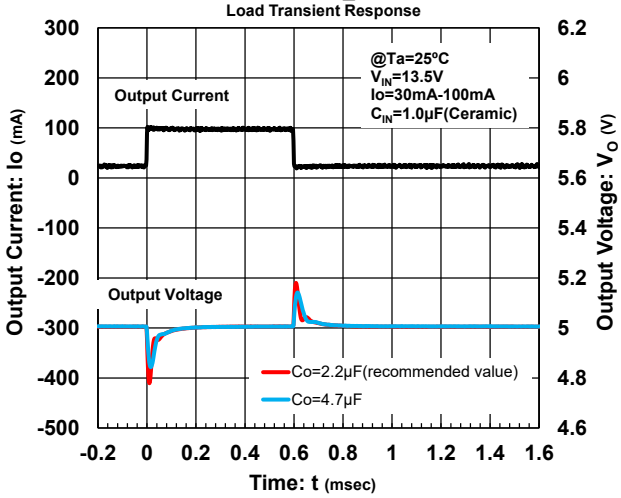

NJW4104_5.0V
Input Transient Response

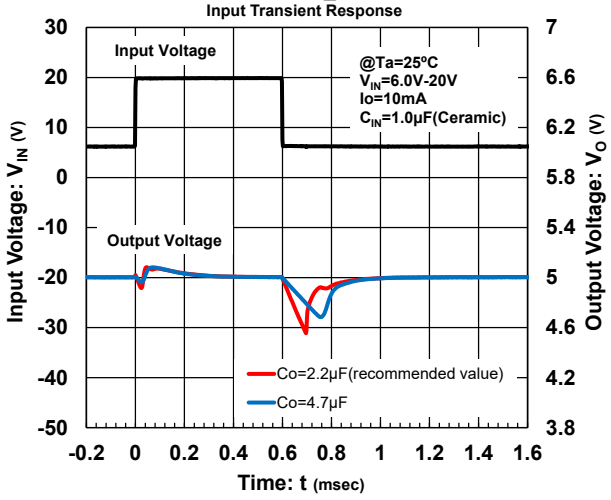

NJW4104_5.0V
ON/OFF Transient Response

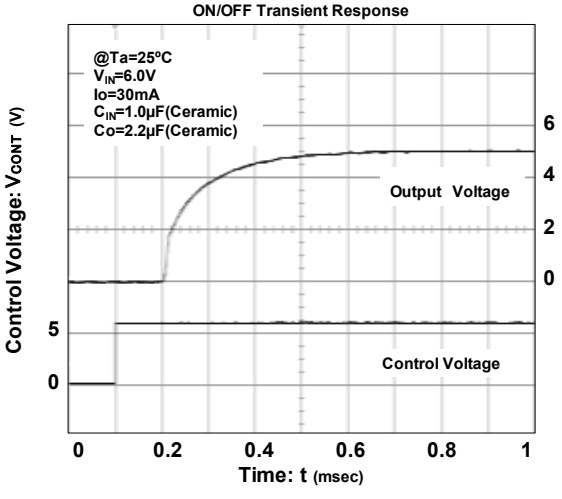

■TYPICAL APPLICATION

●A version

1. In the case where ON/OFF Control is not required

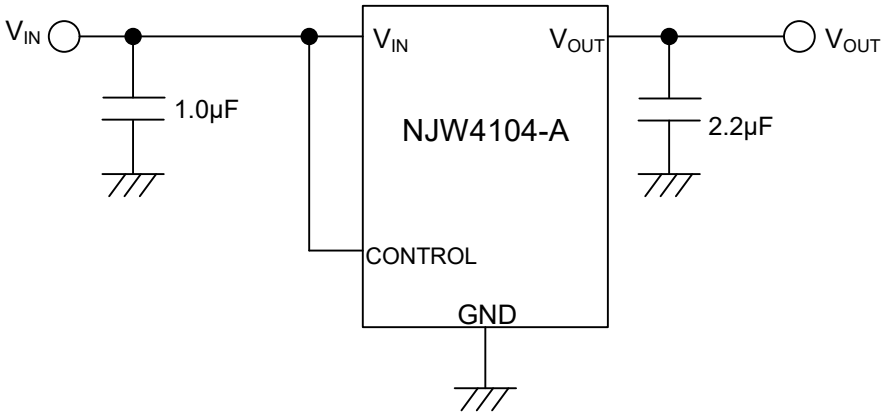

Connect CONTROL Pin to V_{IN} Pin

2. In use of ON/OFF CONTROL

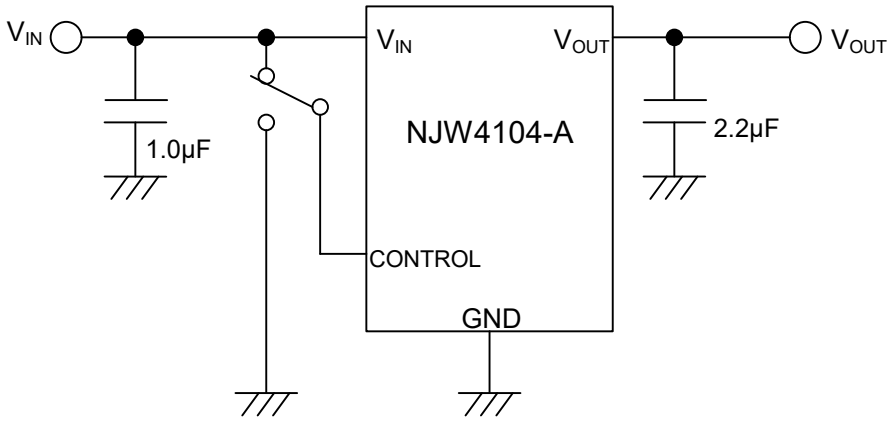

State of CONTROL Pin:

"H" → output is enabled. "L" or "open" → output is disabled

●B version

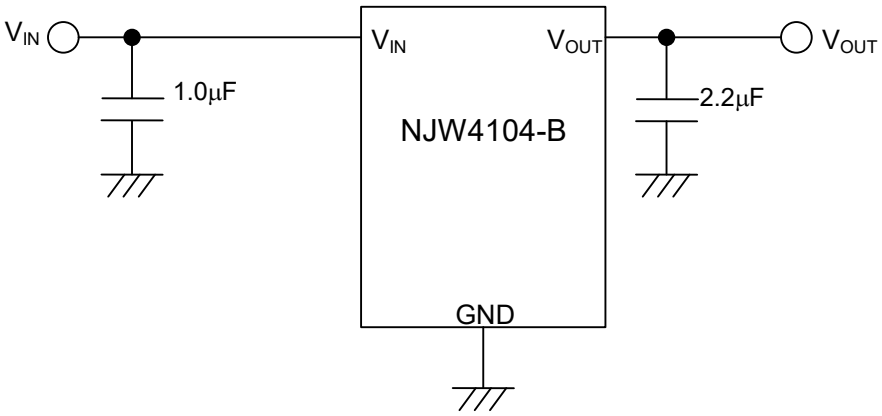

■APPLICATION NOTE / GLOSSARY

*Under Voltage Lockout UVLO

The NJW4104 includes UVLO circuit to prevent malfunction in case of low input voltage.

When the input voltage increases and exceeds the “UVLO Release voltage” (2.8V typ.),UVLO is released and the output voltage rises up.

The UVLO circuit has hysteresis(200mV typ.). Therefore, if the input voltage decreases below the threshold voltage:“UVLO Release voltage” – “UVLO Hysteresis Voltage”, the output voltage shuts down.

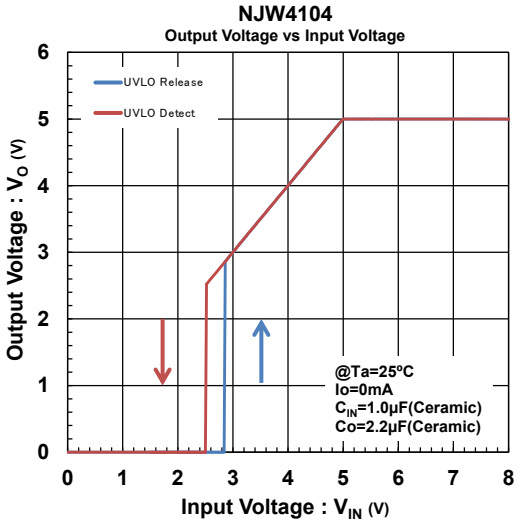

■REVISION HISTORY

Date	Revision	Changes
04.Apr.2017.	Ver.1.0	New Release
27.Aug,2018	Ver.1.1	Correction of erroneous description
17.Mar,2023	Ver.2.0	■AEC-Q100 grade 1 Added

Nisshinbo Micro Devices Inc.

SOT-89-3

PI-SOT-89-3-E-B

■ PACKAGE DIMENSIONS

UNIT: mm

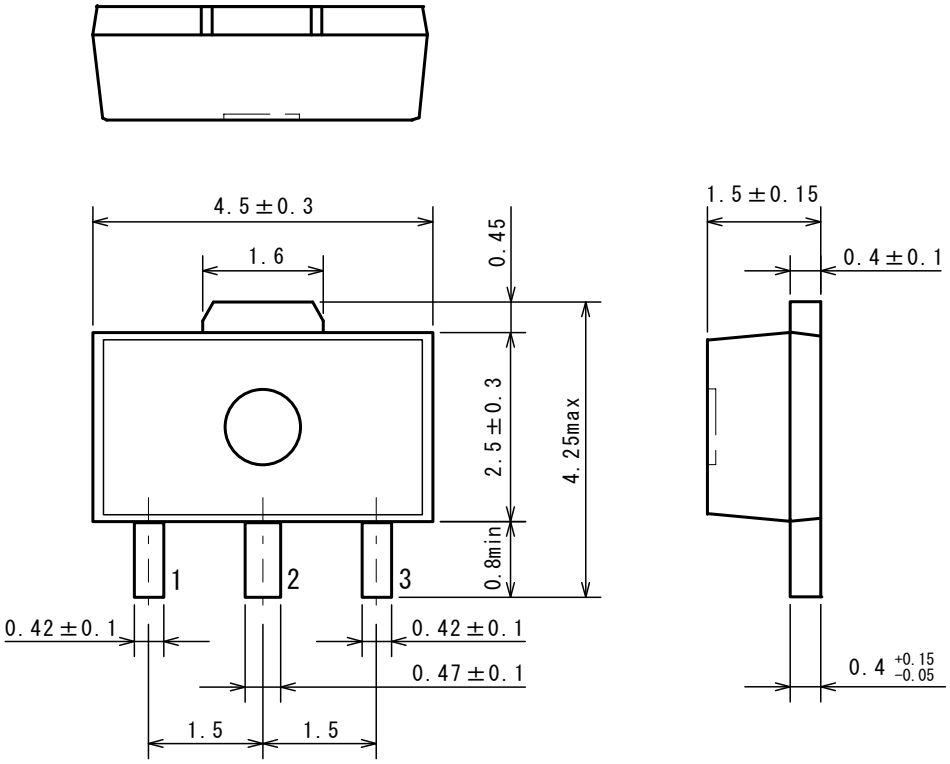

■ EXAMPLE OF SOLDER PADS DIMENSIONS

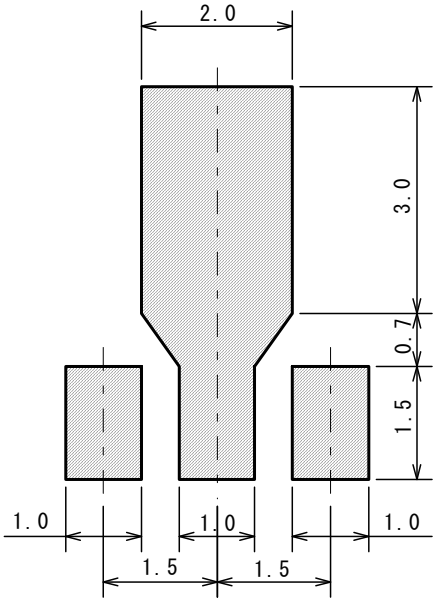

Nisshinbo Micro Devices Inc.

SOT-89-3

PI-SOT-89-3-E-B

■ PACKING SPEC

UNIT: mm

TAPING DIMENSIONS

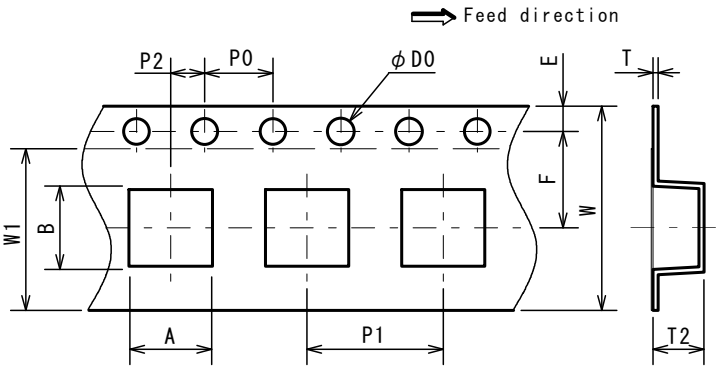

SYMBOL	DIMENSION	REMARKS
A	4.9±0.1	BOTTOM DIMENSION
B	4.5±0.1	BOTTOM DIMENSION
D0	$1.5^{+0.1}_{0}$	
E	1.5±0.1	
F	5.65±0.05	
P0	4.0±0.1	
P1	8.0±0.1	
P2	2.0±0.05	
T	0.3±0.05	
T2	2.0	
W	12.0±0.3	
W1	9.5	THICKNESS 0.1MAX

REEL DIMENSIONS

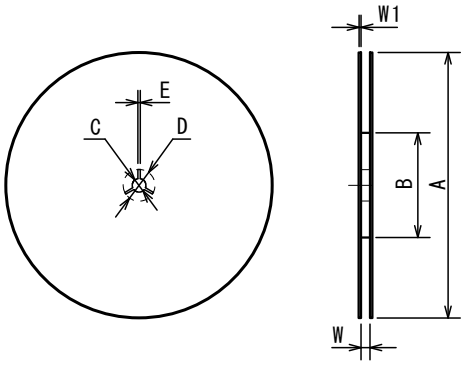

SYMBOL	DIMENSION
A	φ180±1
B	φ 60±1
C	φ 13±0.2
D	φ 21±0.8
E	2±0.5
W	13±0.5
W1	1.2±0.2

TAPING STATE

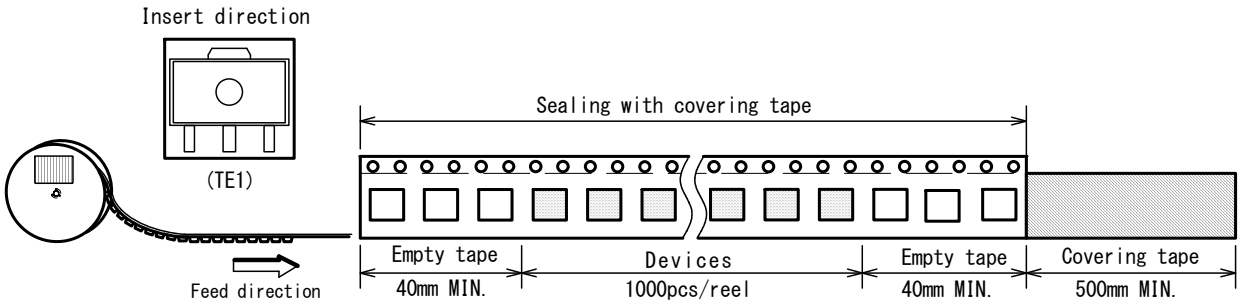

PACKING STATE

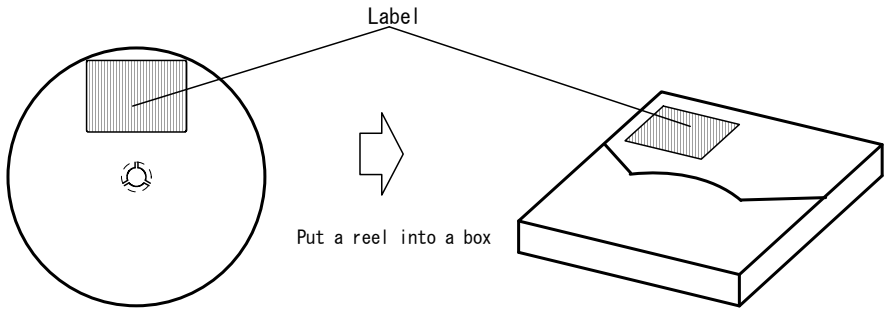

Nisshinbo Micro Devices Inc.

SOT-89-5-1 / SOT-89-5-2

■ PACKAGE DIMENSIONS

UNIT: mm

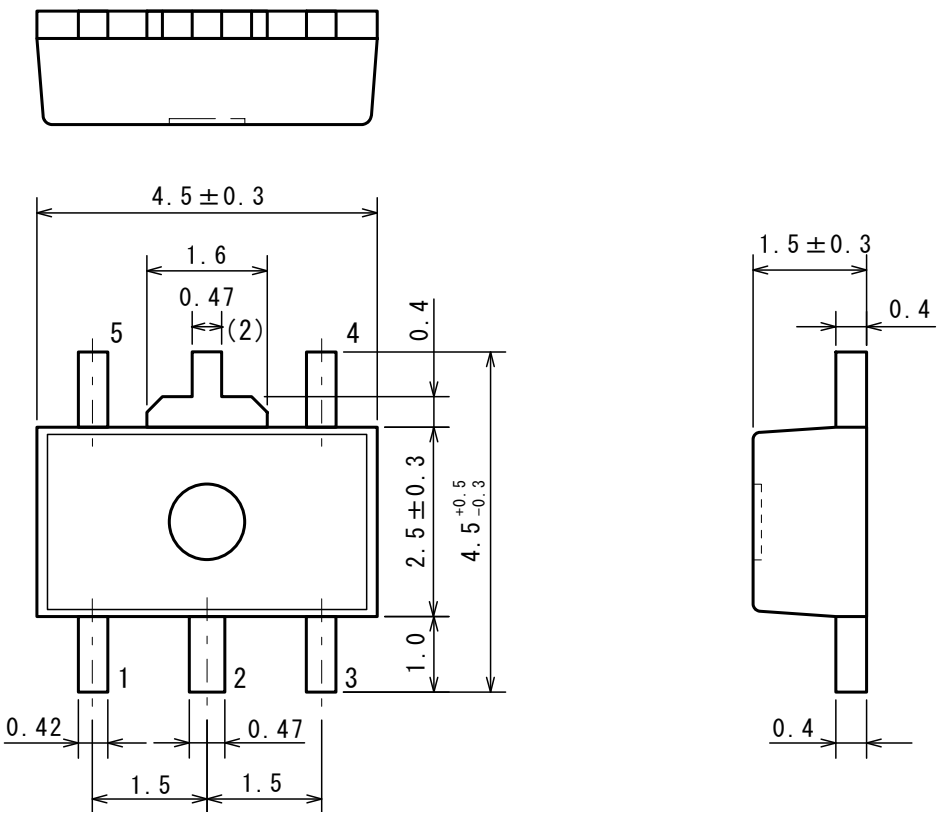

■ EXAMPLE OF SOLDER PADS DIMENSIONS

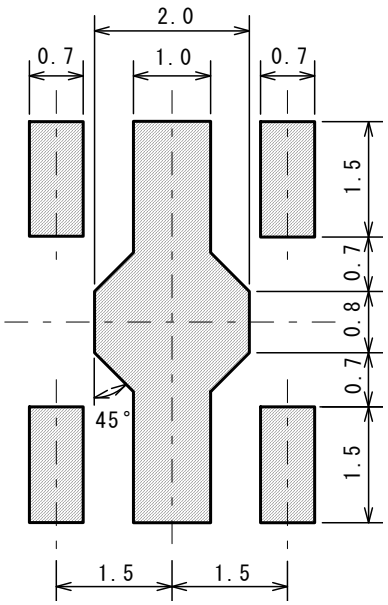

Nisshinbo Micro Devices Inc.

SOT-89-5-1 / SOT-89-5-2

PI-SOT-89-5-1 / SOT-89-5-2-E-B

■ PACKING SPEC

UNIT: mm

TAPING DIMENSIONS

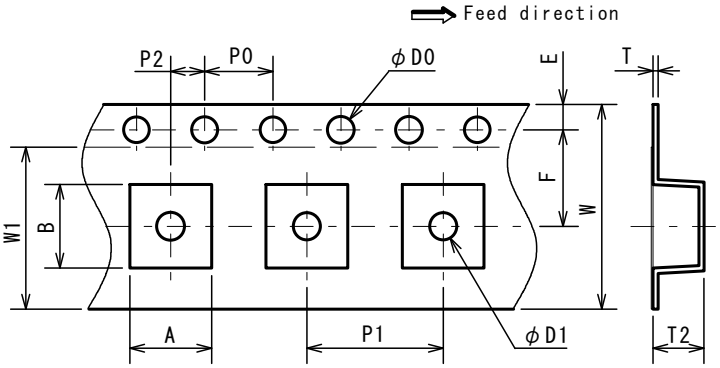

SYMBOL	DIMENSION	REMARKS
A	4.8±0.1	BOTTOM DIMENSION
B	4.9±0.1	BOTTOM DIMENSION
D0	$1.5^{+0.1}_{0}$	
D1	1.6	
E	1.5±0.1	
F	5.65±0.1	
P0	4.0±0.1	
P1	8.0±0.1	
P2	2.0±0.1	
T	0.30±0.05	
T2	2.0±0.1	
W	12.0±0.3	
W1	9.5	THICKNESS 0.1MAX

REEL DIMENSIONS

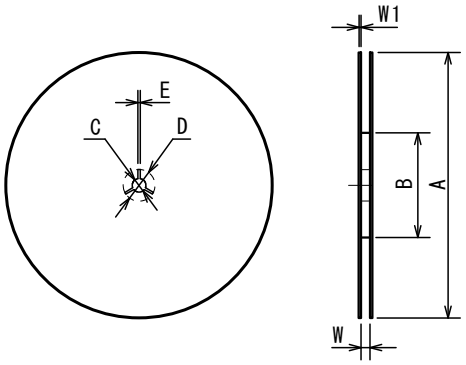

SYMBOL	DIMENSION
A	φ180±1
B	φ 60±1
C	φ 13±0.2
D	φ 21±0.8
E	2±0.5
W	13±0.5
W1	1.2±0.2

TAPING STATE

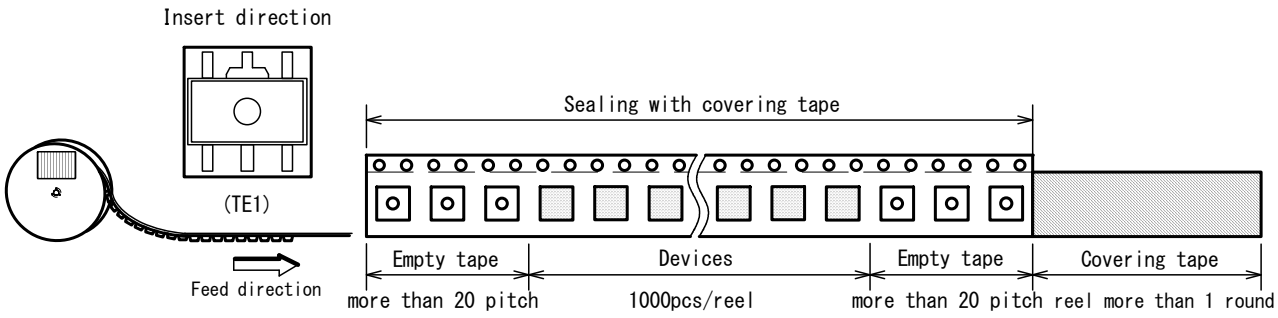

PACKING STATE

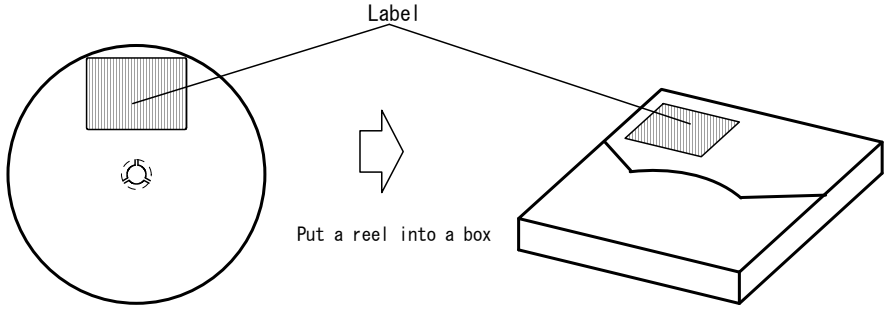

Nisshinbo Micro Devices Inc.

TO-252-3-L1

PI-TO-252-3-L1-E-B

■ PACKAGE DIMENSIONS

UNIT: mm

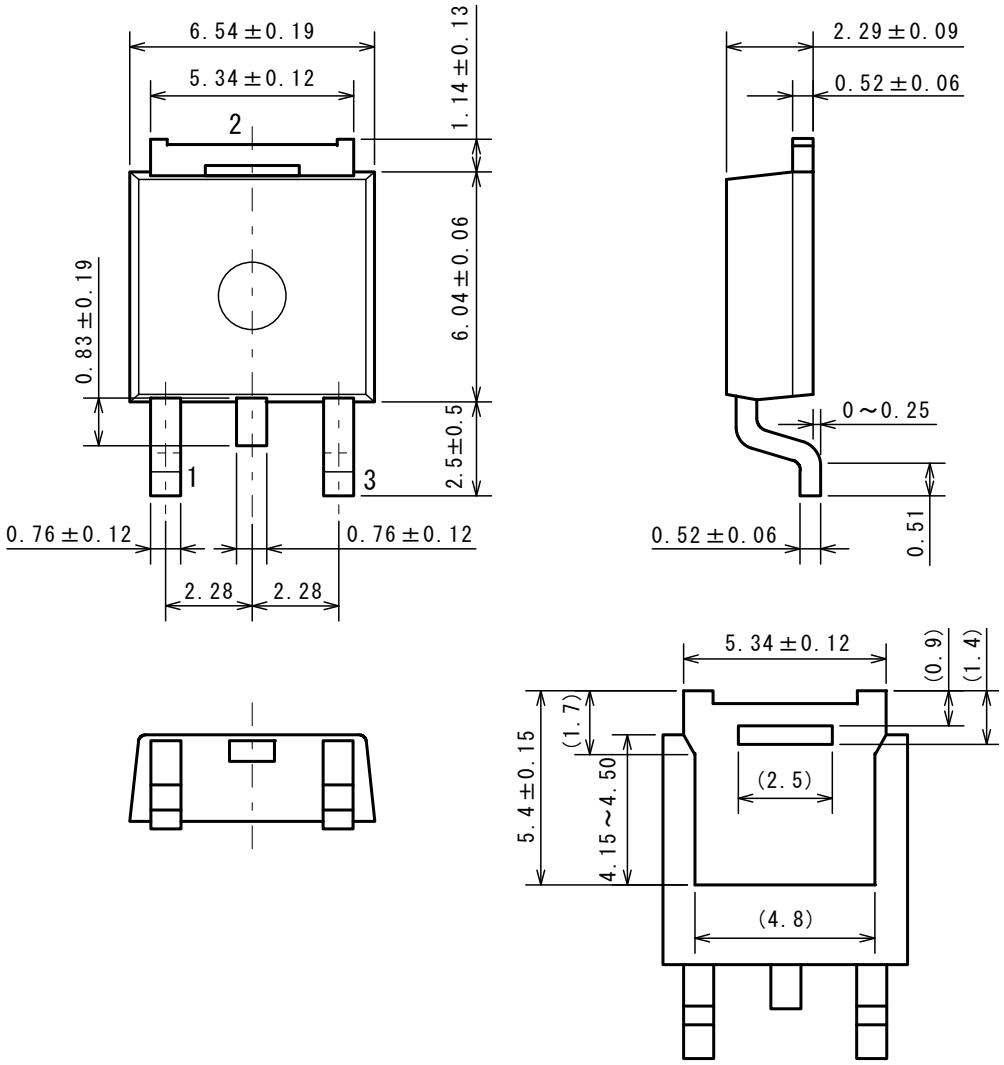

■ EXAMPLE OF SOLDER PADS DIMENSIONS

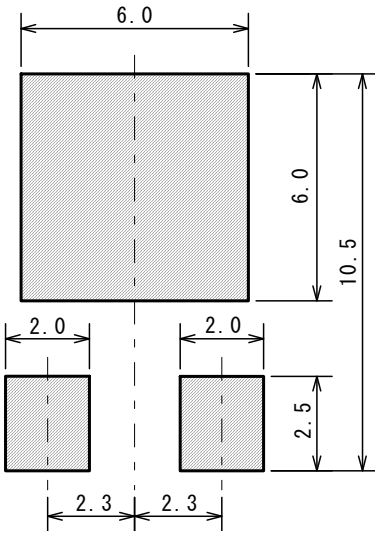

Nisshinbo Micro Devices Inc.

TO-252-3-L1

PI-TO-252-3-L1-E-B

■ PACKING SPEC

UNIT: mm

TAPING DIMENSIONS

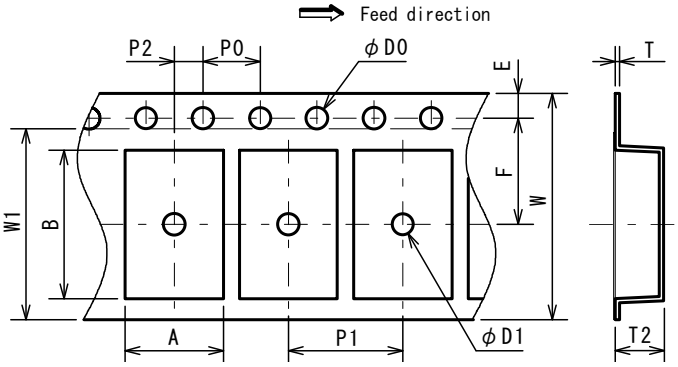

SYMBOL	DIMENSION	REMARKS
A	6.9±0.1	BOTTOM DIMENSION
B	10.5±0.1	BOTTOM DIMENSION
D0	1.5 $^{+0.1}_{0}$	
D1	1.5 $^{+0.1}_{0}$	
E	1.75±0.1	
F	7.5±0.1	
P0	4.0±0.1	
P1	8.0±0.1	
P2	2.0±0.1	
T	0.3±0.1	
T2	3.4 max	
W	16.0±0.3	
W1	13.5	THICKNESS 0.1max

REEL DIMENSIONS

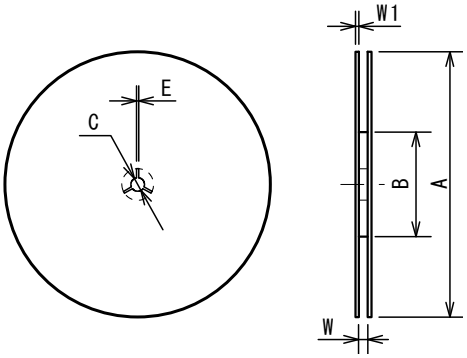

SYMBOL	DIMENSION
A	φ330±2
B	φ 80±1
C	φ 13±0.5
E	2
W	17.5±0.5
W1	2±0.5

TAPING STATE

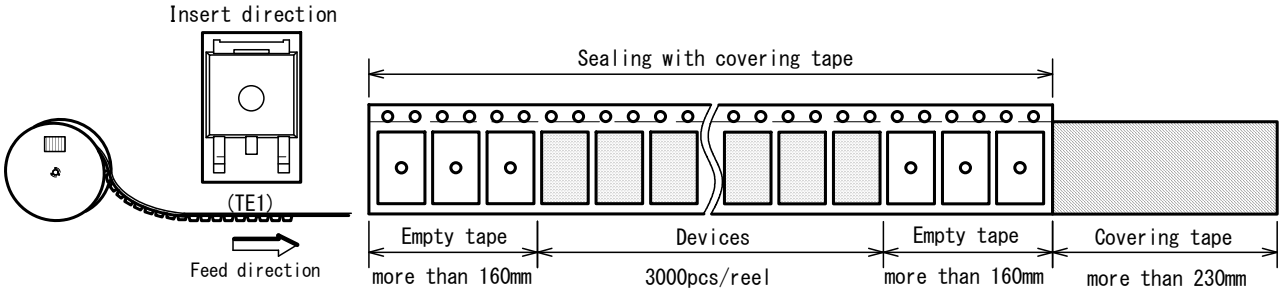

PACKING STATE

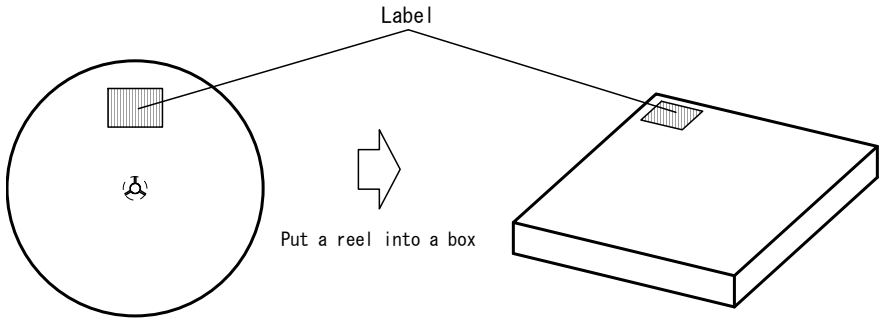

1. The products and the product specifications described in this document are subject to change or discontinuation of production without notice for reasons such as improvement. Therefore, before deciding to use the products, please refer to our sales representatives for the latest information thereon.
2. The materials in this document may not be copied or otherwise reproduced in whole or in part without the prior written consent of us.
3. This product and any technical information relating thereto are subject to complementary export controls (so-called KNOW controls) under the Foreign Exchange and Foreign Trade Law, and related politics ministerial ordinance of the law. (Note that the complementary export controls are inapplicable to any application-specific products, except rockets and pilotless aircraft, that are insusceptible to design or program changes.) Accordingly, when exporting or carrying abroad this product, follow the Foreign Exchange and Foreign Trade Control Law and its related regulations with respect to the complementary export controls.
4. The technical information described in this document shows typical characteristics and example application circuits for the products. The release of such information is not to be construed as a warranty of or a grant of license under our or any third party's intellectual property rights or any other rights.
5. The products listed in this document are intended and designed for automotive applications. Those customers intending to use a product in an application requiring extreme quality and reliability, for example, in a highly specific application where the failure or misoperation of the product could result in human injury or death should first contact us.
    - Aerospace Equipment
    - Equipment Used in the Deep Sea
    - Power Generator Control Equipment (nuclear, steam, hydraulic, etc.)
    - Life Maintenance Medical Equipment
    - Fire Alarms / Intruder Detectors
    - Vehicle Control Equipment (airplane, railroad, ship, etc.)
    - Various Safety Devices
    - Traffic control system
    - Combustion equipment

    In case your company desires to use this product for any applications other than general electronic equipment mentioned above, make sure to contact our company in advance. Note that the important requirements mentioned in this section are not applicable to cases where operation requirements such as application conditions are confirmed by our company in writing after consultation with your company.
6. We are making our continuous effort to improve the quality and reliability of our products, but semiconductor products are likely to fail with certain probability. In order to prevent any injury to persons or damages to property resulting from such failure, customers should be careful enough to incorporate safety measures in their design, such as redundancy feature, fire containment feature and fail-safe feature. We do not assume any liability or responsibility for any loss or damage arising from misuse or inappropriate use of the products.
7. The products have been designed and tested to function within controlled environmental conditions. Do not use products under conditions that deviate from methods or applications specified in this datasheet. Failure to employ the products in the proper applications can lead to deterioration, destruction or failure of the products. We shall not be responsible for any bodily injury, fires or accident, property damage or any consequential damages resulting from misuse or misapplication of the products.
8. Quality Warranty
    8-1. Quality Warranty Period
    In the case of a product purchased through an authorized distributor or directly from us, the warranty period for this product shall be one (1) year after delivery to your company. For defective products that occurred during this period, we will take the quality warranty measures described in section 8-2. However, if there is an agreement on the warranty period in the basic transaction agreement, quality assurance agreement, delivery specifications, etc., it shall be followed.
    8-2. Quality Warranty Remedies
    When it has been proved defective due to manufacturing factors as a result of defect analysis by us, we will either deliver a substitute for the defective product or refund the purchase price of the defective product.
    Note that such delivery or refund is sole and exclusive remedies to your company for the defective product.
    8-3. Remedies after Quality Warranty Period
    With respect to any defect of this product found after the quality warranty period, the defect will be analyzed by us. On the basis of the defect analysis results, the scope and amounts of damage shall be determined by mutual agreement of both parties. Then we will deal with upper limit in Section 8-2. This provision is not intended to limit any legal rights of your company.
9. Anti-radiation design is not implemented in the products described in this document.
10. The X-ray exposure can influence functions and characteristics of the products. Confirm the product functions and characteristics in the evaluation stage.
11. WLCSP products should be used in light shielded environments. The light exposure can influence functions and characteristics of the products under operation or storage.
12. Warning for handling Gallium and Arsenic (GaAs) products (Applying to GaAs MMIC, Photo Reflector). These products use Gallium (Ga) and Arsenic (As) which are specified as poisonous chemicals by law. For the prevention of a hazard, do not burn, destroy, or process chemically to make them as gas or power. When the product is disposed of, please follow the related regulation and do not mix this with general industrial waste or household waste.
13. Please contact our sales representatives should you have any questions or comments concerning the products or the technical information.

NISSHINBO

Nisshinbo Micro Devices Inc.

Official website
https://www.nisshinbo-microdevices.co.jp/en/

Purchase information
https://www.nisshinbo-microdevices.co.jp/en/buy/

ENTEGRECİ

Bu belge www.entegreci.com üzerinden sunulmaktadır.

Elektronik komponent tedarikinde Entegreci

Entegreci, Eskişehir merkezli, Türkiye geneline satış yapan bir elektronik komponent mağazasıdır. Entegreler (IC), mikrodenetleyiciler, transistörler, diyotlar, pasif elemanlar, konnektörler, modüller ve geliştirme kartları tek adetten seri üretim adetlerine kadar satılır. Ürün sayfalarında güncel stok durumunu, fiyatı ve datasheet bağlantısını bulabilirsiniz.

Parça koduyla arama

Üretici parça numarasını yazın; stok ve fiyatı hemen görün.

www.entegreci.com

Ürün kategorileri

Entegreden kapasitöre tüm elektronik komponent kategorileri.

Kategorilere göz atın

Üreticiler

Aradığınız üreticinin ürünlerini tek sayfada inceleyin.

Üreticileri görün

Toplu alım ve teklif

Listede olmayan ya da yüksek adetli parçalar için teklif isteyin.

Teklif isteyin

www.entegreci.com | **destek@entegreci.com** | **0850 305 90 34**

Entegreci is an online electronic components store based in Türkiye. Search by manufacturer part number to see stock, prices and datasheets for integrated circuits, microcontrollers, transistors, passive components and connectors, or request a quote for parts that are not listed.

Bu sayfa Entegreci tarafından eklenmiştir. Belgenin önceki sayfaları asıl yayıncısına aittir ve içeriği değiştirilmemiştir; en güncel sürüm için belgenin yayıncısına başvurun.