High Voltage Very low current consumption Io=300mA Low Dropout Regulator

■ GENERAL DESCRIPTION

The NJW4184 is a high voltage and low current consumption low dropout regulator.

It has two lineups as A version (built-in ON/OFF function type) and B version (3-terminal / compatible with 78L/M series)

NJW4184 is mounted to SOT-89-3/-5, TO-252-3/-5 packages and corresponded to Low ESR capacitor (MLCC).

The wide input range makes NJW4184 suitable for a Car accessory, industrial supplies, battery equipment and various applications.

■ PACKAGE OUTLINE



NJW4184U2

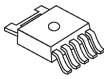

NJW4184DL3



NJW4184U3



NJW4184DL1

■ FEATURES

- Wide Operating Voltage Range — 4.0 to 35V (max.)
- Low Current Consumption — 12μA (A version), 9μA (B version)
- Correspond to Low ESR capacitor (MLCC)
- Output Current — I_O (min.) =300mA
- Output Voltage Range — V_O: 2.5V to 15.0V
- High Precision Output — V_O ±1.0%
- ON/OFF function (apply only A ver.)
- Internal Thermal Overload Protection
- Internal Over Current Protection
- Package Outline — A ver.: SOT-89-5 TO-252-5; B ver.: SOT-89-3 TO-252-3

■ PRODUCT CLASSIFICATION

Device Name	Version	ON/OFF Function	Package
NJW4184U2-xxA	A	Yes	SOT-89-5
NJW4184DL3-xxA	A	Yes	TO-252-5
NJW4184U3-xxB	B	-	SOT-89-3
NJW4184DL1-xxB	B	-	TO-252-3

xx=Output Voltage ex) 33=3.3V 05=5.0V

■ PIN COFIGURATION

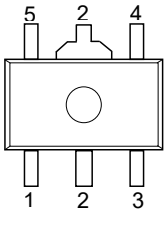

Pin Function
1.CONTROL
2.GND
3.N.C.
4.V_{OUT}
5. V_{IN}

NJW4184U2-A

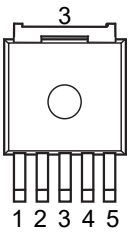

Pin Function
1.V_{IN}
2.CONTROL
3.GND
4.N.C.
5. V_{OUT}

NJW4184DL3-A

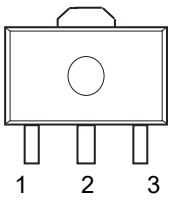

Pin Function
1.V_{OUT}
2.GND
3.V_{IN}

NJW4184U3-B

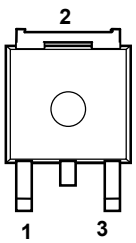

Pin Function
1.V_{IN}
2.GND
3.V_{OUT}

NJW4184DL1-B

■ BLOCK DIAGRAM

・A version

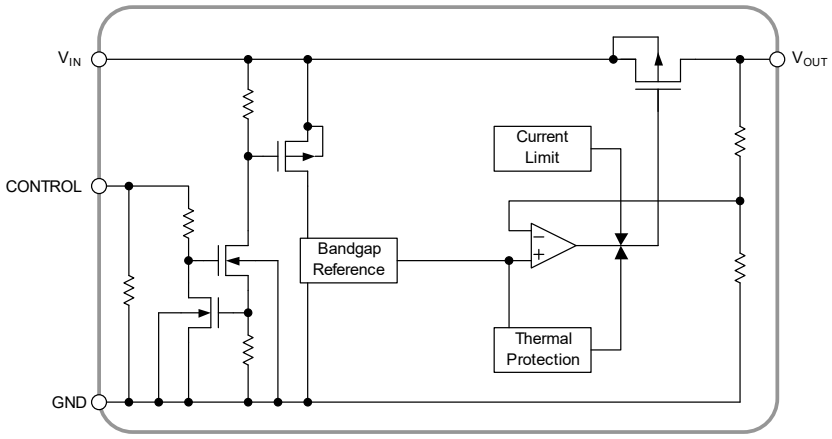

・B version

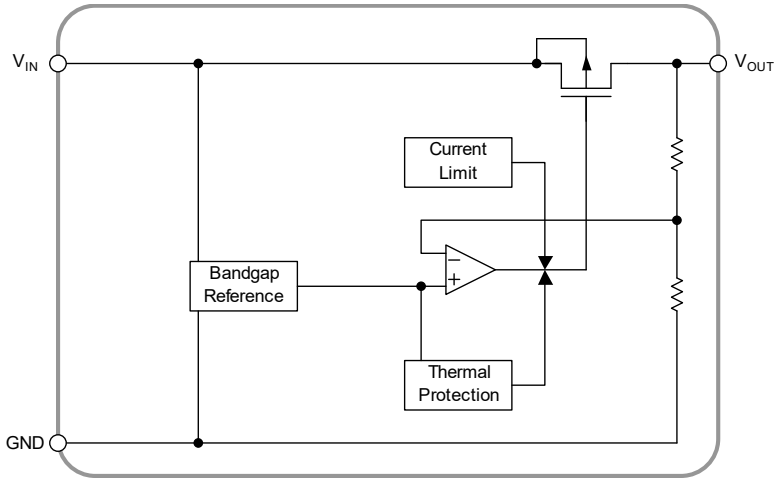

■ OUTPUT VOLTAGE RANK LIST

・A version

SOT-89-5 TO-252-5

Device Name	VOUT	Device Name	VOUT
NJW4184U2-25A	2.5V	NJW4184DL3-25A	2.5V
NJW4184U2-33A	3.3V	NJW4184DL3-33A	3.3V
NJW4184U2-05A	5.0V	NJW4184DL3-05A	5.0V
NJW4184U2-08A	8.0V	NJW4184DL3-08A	8.0V
NJW4184U2-09A	9.0V	NJW4184DL3-12A	12.0V
NJW4184U2-12A	12.0V	NJW4184DL3-15A	15.0V
NJW4184U2-15A	15.0V		

・B version

SOT-89-3 TO-252-3

Device Name	VOUT	Device Name	VOUT
NJW4184U3-25B	2.5V	NJW4184DL1-25B	2.5V
NJW4184U3-33B	3.3V	NJW4184DL1-33B	3.3V
NJW4184U3-05B	5.0V	NJW4184DL1-34B	3.4V
NJW4184U3-15B	15.0V	NJW4184DL1-05B	5.0V
		NJW4184DL1-15B	15.0V

■ ABSOLUTE MAXIMUM RATINGS (Ta=25°C)

PARAMETER	SYMBOL	RATINGS		UNIT
Input Voltage	V_{IN}	-0.3 to +40		V
Peak Input Voltage(*1)	V_{INPEAK}	45		V
Control Voltage(*2)	V_{CONT}	-0.3 to +40		V
Output Voltage	V_O	-0.3 to V_{IN} ≤ +17		V
Power Dissipation	P_D	SOT89-3/-5	625(*3) 2400(*4)	mW
		TO252-3/-5	1190(*3) 3125(*4)	
Junction Temperature	Tj	-40 to +150		°C
Operating Temperature	Topr	-40 to +85		°C
Storage Temperature	Tstg	-40 to +150		°C

(*1): Duration time: t≤200ms, Output Current: Io≤300mA

(*2): Apply only the A version. Peak Control Voltage is same as "V_{INPEAK}"

(*3): Mounted on glass epoxy board. (76.2×114.3×1.6mm:based on EIA/JDEC standard size, 2Layers, Cu area 100mm^2)

(*4): Mounted on glass epoxy board. (76.2×114.3×1.6mm:based on EIA/JDEC standard, 4Layers)

(For 4Layers: Applying 74.2×74.2mm inner Cu area and a thermal via hole to a board based on JEDEC standard JESD51-5)

■ INPUT VOLTAGE RANGE : V_{IN}=4.0 to 35V

■ ELECTRICAL CHARACTERISTICS

Unless otherwise noted, $V_O \geq 3.0V$: $V_{IN} = V_O + 1V$, $C_{IN} = 1.0\mu F$, $C_O = 4.7\mu F$, $T_a = 25°C$

$V_O < 3.0V$: $V_{IN} = 4.0V$, $C_{IN} = 1.0\mu F$, $C_O = 10\mu F$, $T_a = 25°C$

PARAMETER	SYMBOL	TEST CONDITION		MIN.	TYP.	MAX.	UNIT
Output Voltage	V_O	I_O =30mA		-1.0%	-	+1.0%	V
Quiescent Current	I_Q	A version I_O =0mA, except I_{CONT}		-	12	22	μA
		B version I_O =0mA		-	9	19	
Quiescent Current at Control OFF(*5)	$I_{Q(OFF)}$	V_{CONT}=0V		-	-	1	μA
Output Current	I_O	$V_O \times 0.9$		300	-	-	mA
Line Regulation	$\Delta V_O/\Delta V_{IN}$	$V_{IN} = V_O$+1V to 35V, I_O=30mA ($V_O \geq 3V$) V_{IN} = 4V to 35V, I_O=30mA ($V_O < 3V$)		-	-	0.05	%/V
Load Regulation	$\Delta V_O/\Delta I_O$	I_O=0mA to 300mA		-	-	0.01	%/mA
Ripple Rejection	RR	V_{IN}= 5V, ein=50mVrms, f=1kHz, I_O =10mA	V_O=2.5V	-	42	-	dB
		V_{IN}= V_O +2V, ein=50mVrms, f=1kHz, I_O =10mA	V_O=3.3V	-	40	-	
			V_O=3.4V	-	40		
			V_O=5.0V	-	36	-	
			V_O=8.0V	-	33	-	
			V_O=9.0V	-	32	-	
			V_O=12.0V	-	30	-	
			V_O=15.0V	-	29	-	
Dropout Voltage (*6)	ΔV_{IO}	I_O=100mA		-	0.1	0.2	V
Control Current (*5)	I_{CONT}	V_{CONT}=1.6V		-	0.5	3	μA
Control Voltage for ON-state(*5)	$V_{CONT(ON)}$			1.6	-	-	V
Control Voltage for OFF-state(*5)	$V_{CONT(OFF)}$			-	-	0.6	V
Average Temperature Coefficient of Output Voltage	$\Delta V_O/\Delta Ta$	Ta=0 to 85°C, I_O =30mA		-	±50	-	ppm/°C
Input Voltage	V_{IN}			4.0	-	35	V

(*5): Apply only the A version.

(*6): The output voltage excludes under 3.8V.

The above specification is a common specification for all output voltages.

Therefore, it may be different from the individual specification for a specific output voltage.

■ POWER DISSIPATION vs. AMBIENT TEMPERATURE

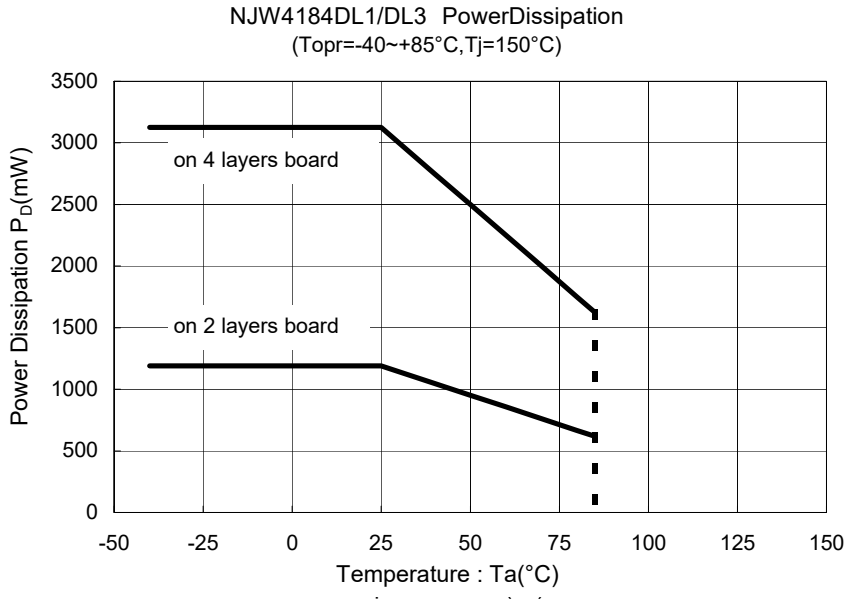

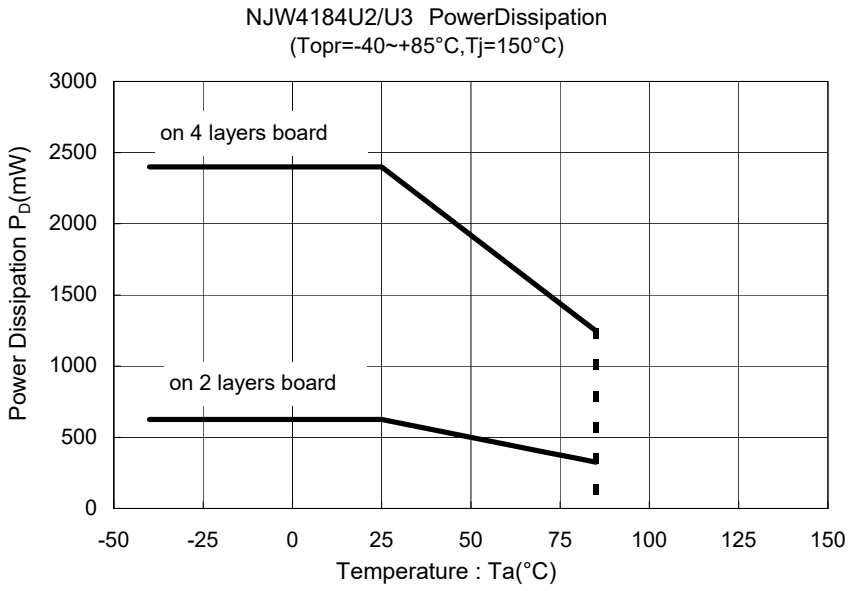

■ TEST CIRCUIT

・A version

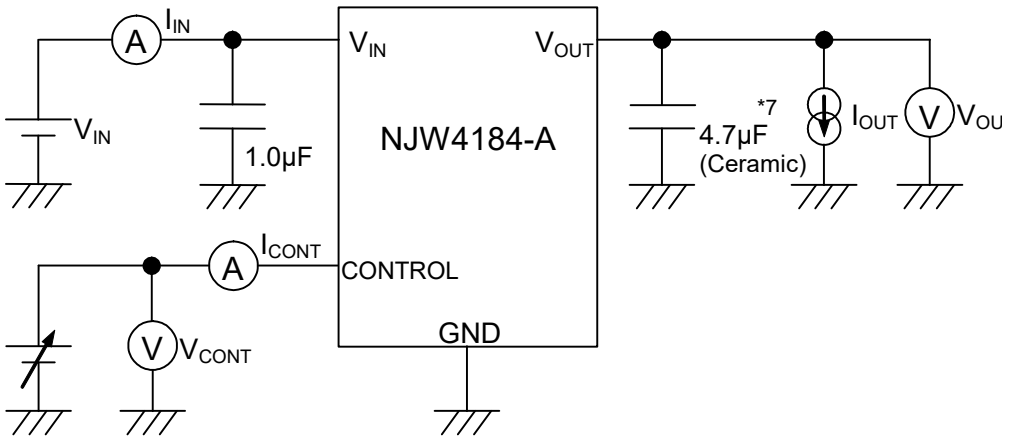

*7 : Vo < 3.0V version : Co=10µF

・B version

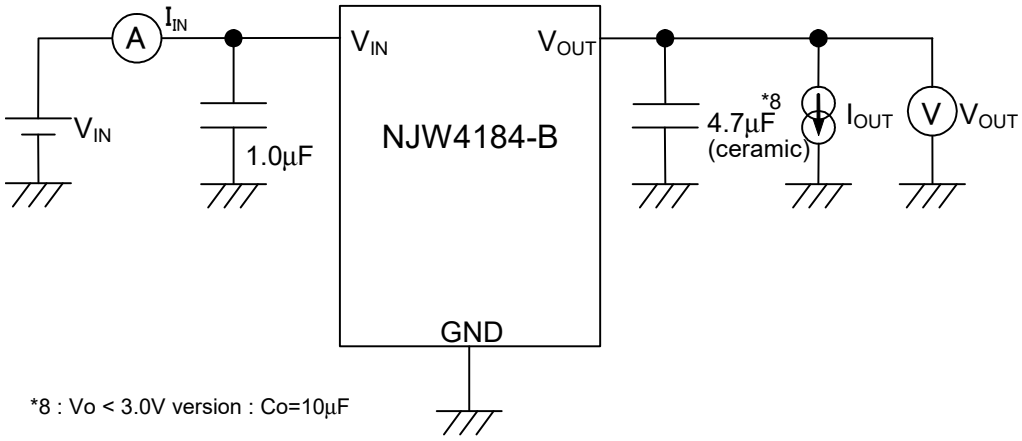

*8 : Vo < 3.0V version : Co=10µF

■ TYPICAL APPLICATION

・A version

① In the case where ON/OFF Control is not required

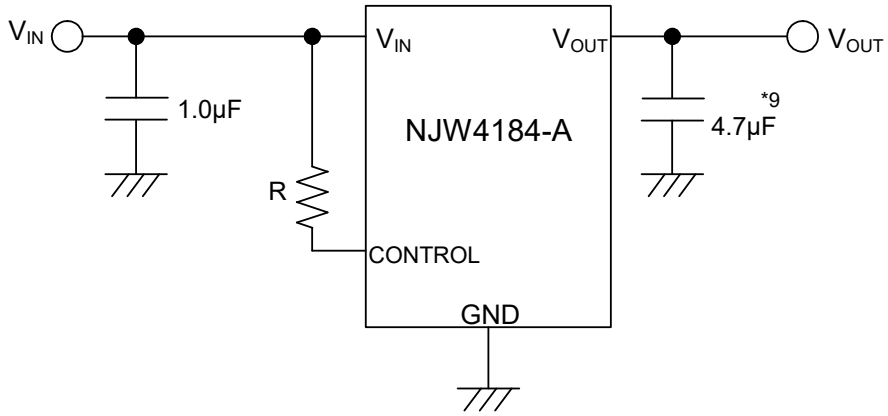

*9 : Vo < 3.0V version : Co=10μF

Connect control pin to V_{IN} pin

② In use of ON/OFF CONTROL

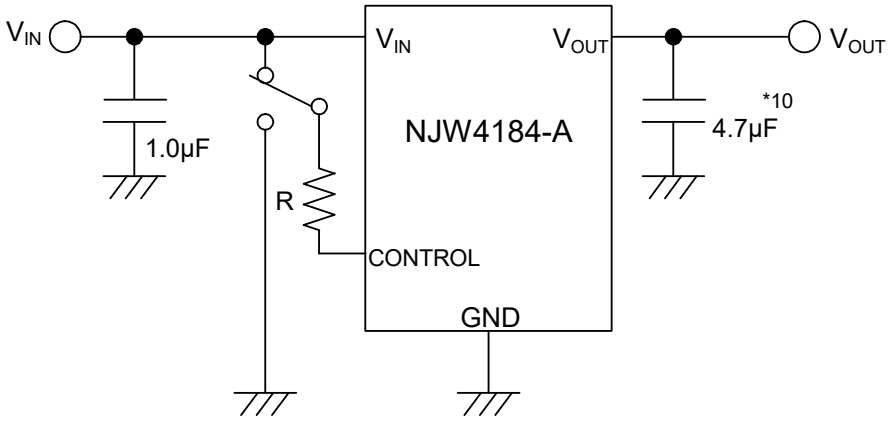

*10 : Vo < 3.0V version : Co=10μF

State of control pin:

- "H"→ output is enabled.
- "L" or "open" → output is disabled.

・B version

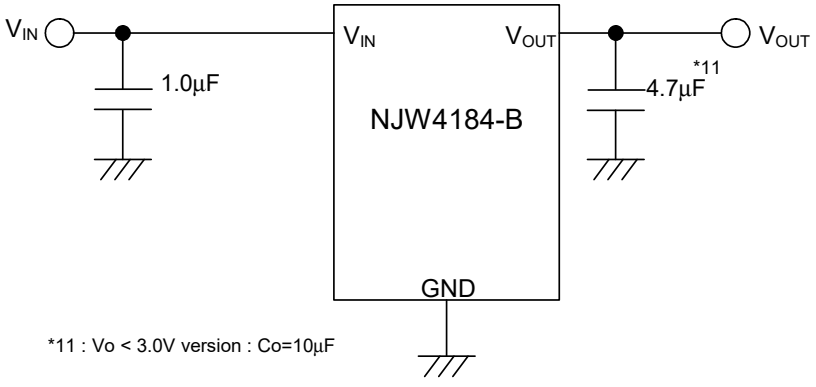

*11 : Vo < 3.0V version : Co=10μF

*In the case of using a resistance "R" between V_{IN} and control.

If this resistor is inserted, it can reduce the control current when the control voltage is high.

The applied voltage to control pin should set to consider voltage drop through the resistor “R” and the minimum control voltage for ON-state.

The $V_{CONT\ (ON)}$ and I_{CONT} have temperature dependence as shown in the "Control Current vs. Temperature" and " Control Voltage vs. Temperature" characteristics. Therefore, the resistance "R" should be selected to consider the temperature characteristics.

*Input Capacitor C_{IN}

Input Capacitor C_{IN} is required to prevent oscillation and reduce power supply ripple for applications when high power supply impedance or a long power supply line.

Therefore, use the recommended C_{IN} value (refer to conditions of ELECTRIC CHARACTERISTIC) or larger and should connect between GND and the V_{IN} pin as shortest path as possible to avoid the problem.

*Output Capacitor C_O

Output capacitor (C_O) will be required for a phase compensation of the internal error amplifier.

The capacitance and the equivalent series resistance (ESR) influence to stable operation of the regulator.

Use of a smaller C_O may cause excess output noise or oscillation of the regulator due to lack of the phase compensation.

On the other hand, Use of a larger C_O reduces output noise and ripple output, and also improves output transient response when rapid load change.

Therefore, use the recommended C_O value (refer to conditions of ELECTRIC CHARACTERISTIC) or larger and should connect between GND and the V_{OUT} pin as shortest path as possible for stable operation

The recommended capacitance depends on the output voltage rank. Especially, low voltage regulator requires larger C_O value.

In addition, you should consider varied characteristics of capacitor (a frequency characteristic, a temperature characteristic, a DC bias characteristic and so on) and unevenness peculiar to a capacitor supplier enough.

When selecting C_O, recommend that have withstand voltage margin against output voltage and superior temperature characteristic.

*The notes of the evaluation when the V_O pin is shorted to GND

When evaluated short circuit test, the IC may break down because of regenerated energy by the parasitic inductance included in wiring pattern.

It phenomenon appears conspicuously when output voltage is high(Vo=8.0V or more)or connected to inductive load.

In case of short circuit in actual application, not likely to destruction of IC because of some of Resistance exist between load.

If happened above phenomenon by the short circuit test with the actual application, recommend connecting schottky barrier diode(SBD) between the V_O pin and GND or using output capacitors that have ESR more than 2Ω like a tantalum or aluminum electrolytic capacitor.(see below figure)

(a)In case of insert Schottky barrier diode between the V_O pin to GND

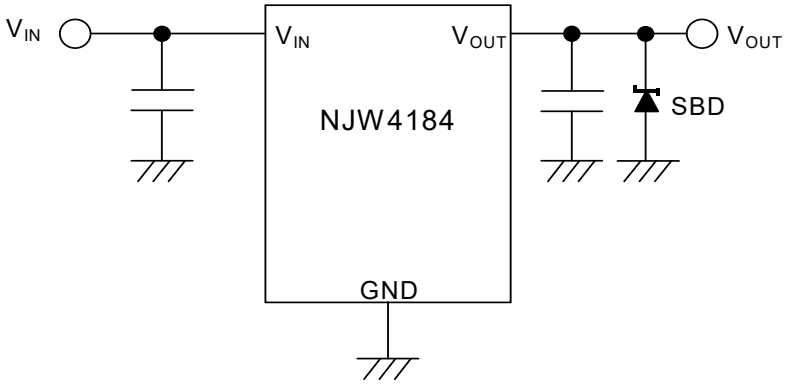

(b) In case of using the electrolysis condenser or insert series resistance

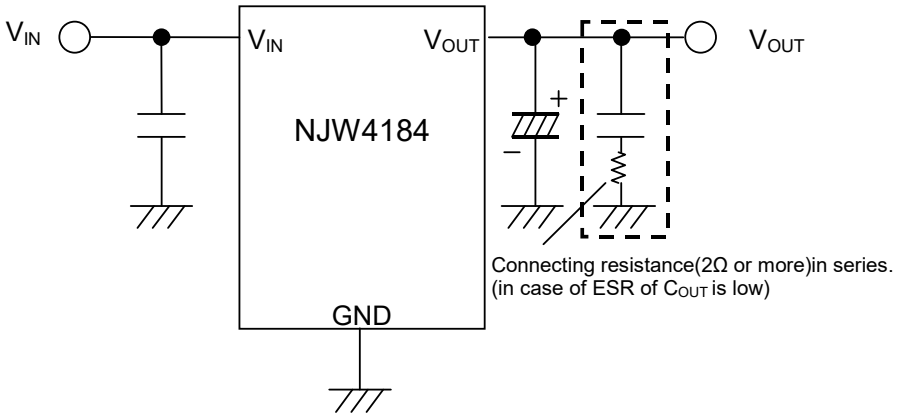

*Overshoot of Output Voltage

Transient fluctuation of output voltage tends to be large compared to other typical regulators because NJW4184 is designed with the concept of low current consumption characteristics.

In general, overshoot or undershoot of output voltage is more likely to occur when the following cases.

- When input voltage or output current fluctuate sharply
- When output capacitors is small
- When output load is small
- When start up from the narrow state between Input and output.

NJW4184 has built in overshoot protection (OSP) circuit and the aim of reducing the overshoot compared to the low current consumption typical products.
However, there are cases that very large value of overshoot may occur because of delay of the OSP circuit when the input voltage rises from 2.0V to 2.5V.

Overshoot value since the amount will vary with compound conditions, please check it with the actual environment reference to the above.
In addition, the following measures will be mentioned as a method to reduce the overshoot value.

a. By increasing the input and output capacitors to absorb overshoot value.
b. Adjust the timing of the CONTROL pin voltage and rising speed of input voltage, to avoid the rise form 2.0V to 2.5V.

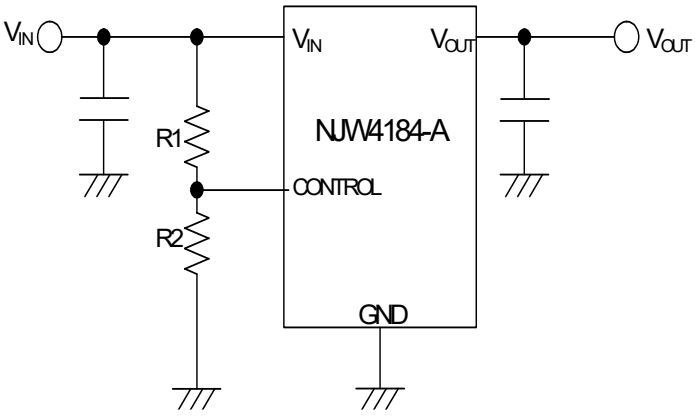

Examples of application circuits, using a control pin.

When using other power supply to CONTROL pin it is effective to making the CONTROL pin to Low level at the range of V_{IN} voltage from 2.0V to 2.5V.

However when it is difficult to control of CONTROL pin by another power supply, it is possible to same control by dividing the input voltage with resistance as shown in the left figure.

(Application example)
In the case of R1=100kΩ/R2=30kΩ, since the CONTROL pin voltage is below 0.6V when V_{IN} = 2.5V, the V_{OUT} is the OFF state.
Resistor divider ratio should be set consider to “Control Voltage for ON-State” and ambient temperature.

■ TYPICAL CHARACTERISTICS

NJW4184_5.0V
Output Voltage vs Input Voltage

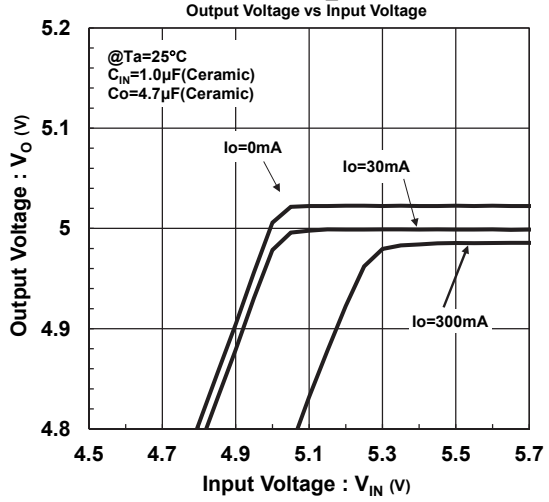

NJW4184_5.0V
Output Voltage vs Output Current

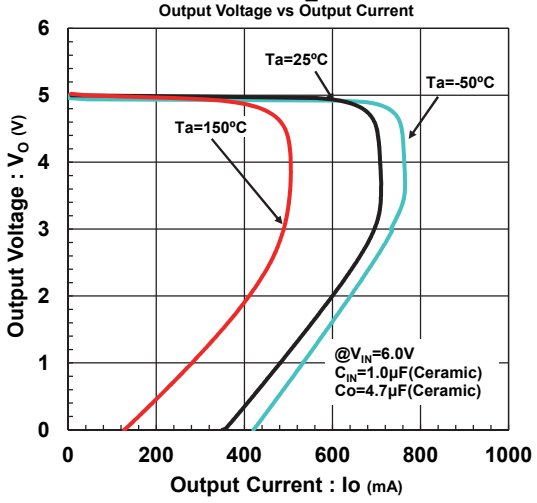

NJW4184_5.0V
Ground Pin Current vs Output Current

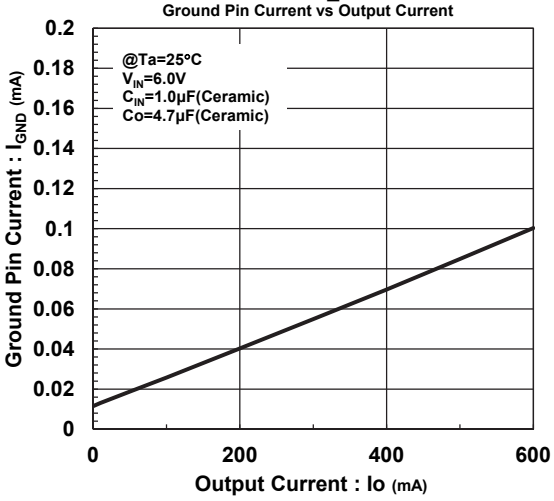

NJW4184(A ver.)_5.0V
Quiescent Current vs Input Voltage

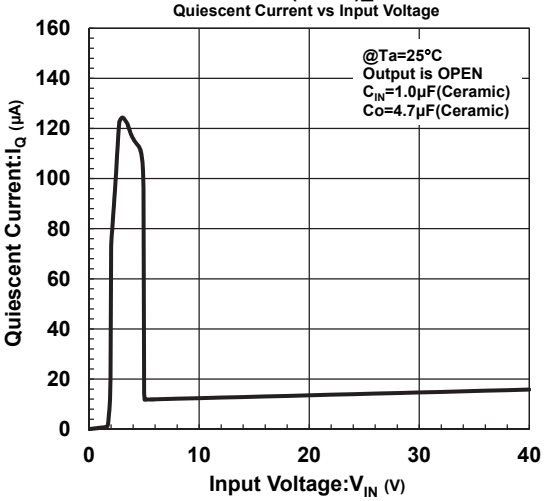

NJW4184(B ver.)_5.0V
Quiescent Current vs Input Voltage

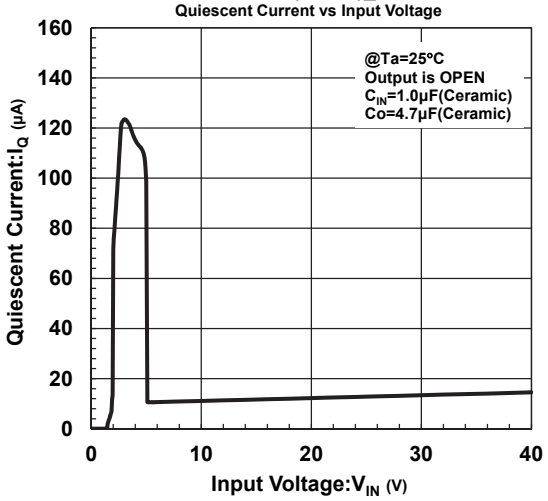

NJW4184_5.0V
Control Current vs Control Voltage

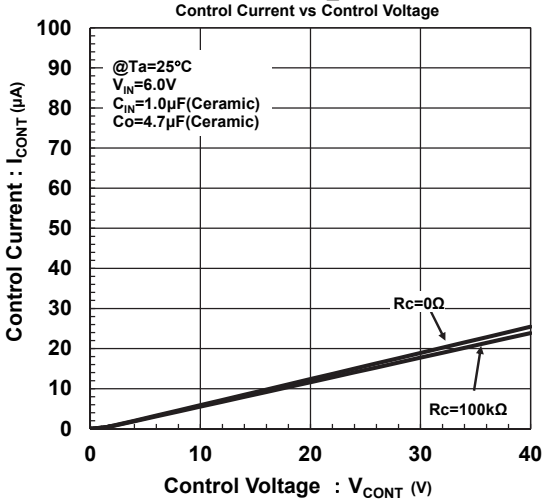

NJW4184_5.0V
Output Voltage vs Control Voltage

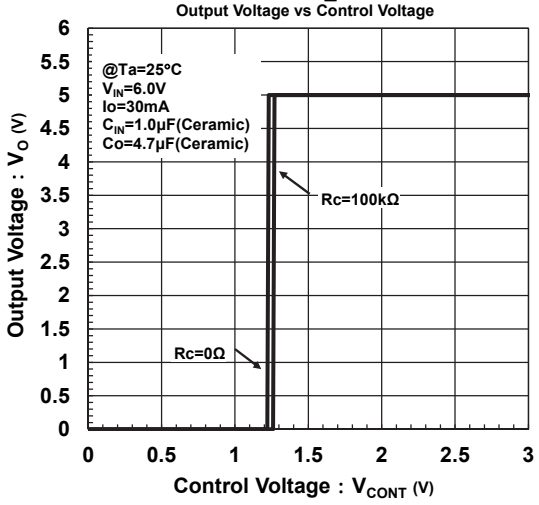

NJW4184_5.0V
Load Regulation vs Output Current

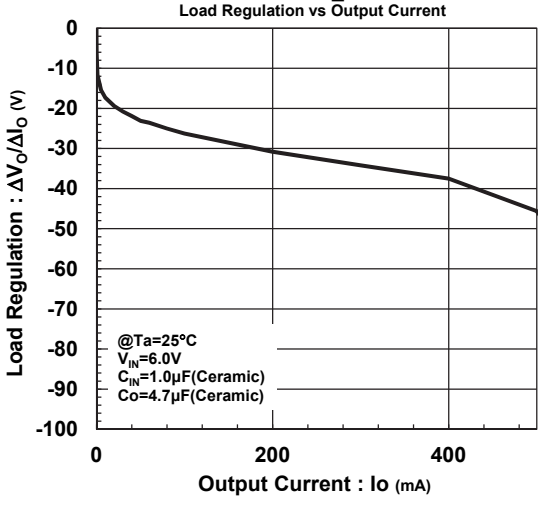

NJW4184_5.0V
Peak Output Current vs Input Voltage

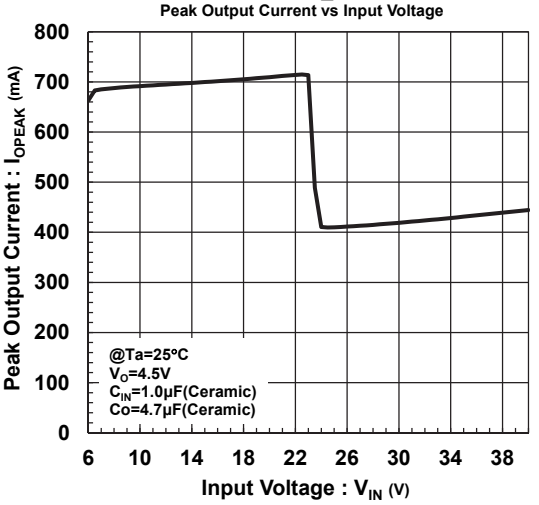

NJW4184_5.0V
Dropout Voltage VS Output Current

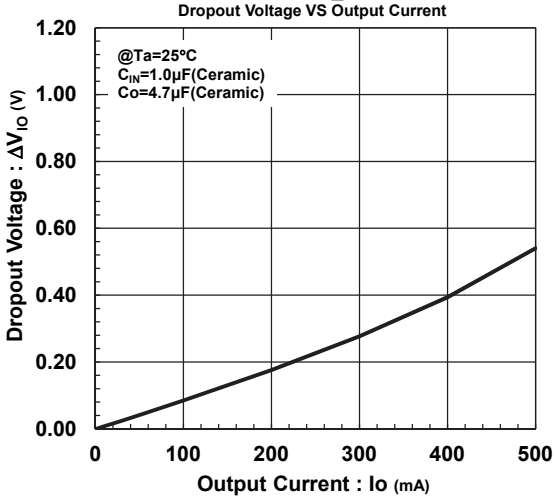

NJW4184_5.0V
Ripple Rejection vs Frequency

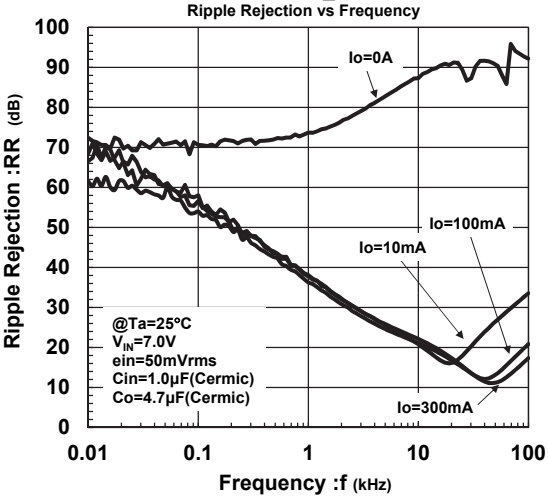

NJW4184_5.0V
Ripple Rejection vs Output Current

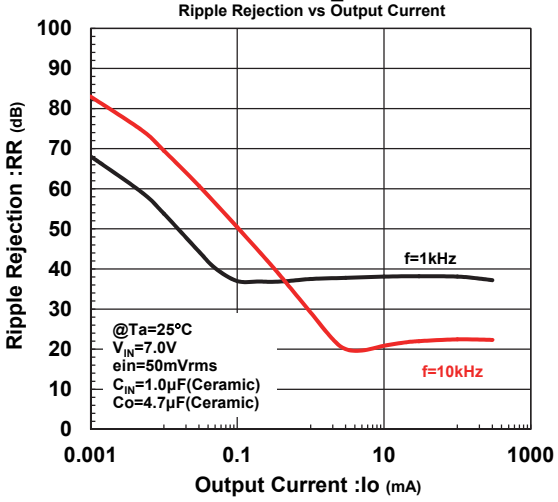

NJW4184_5.0V
Equivalent Serise Resistance vs Output Current

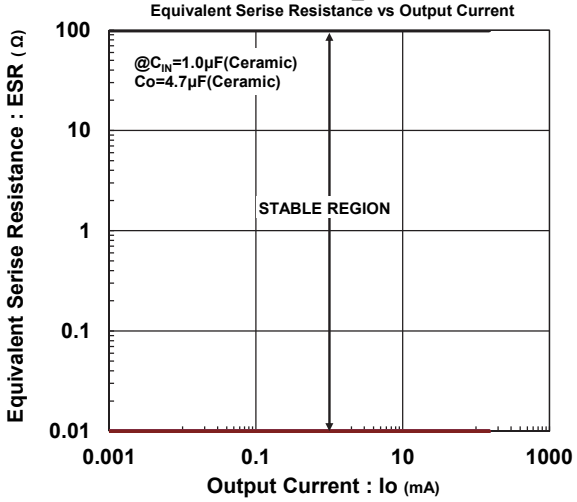

NJW4184_5.0V
Output Noise Voltage vs Output Current

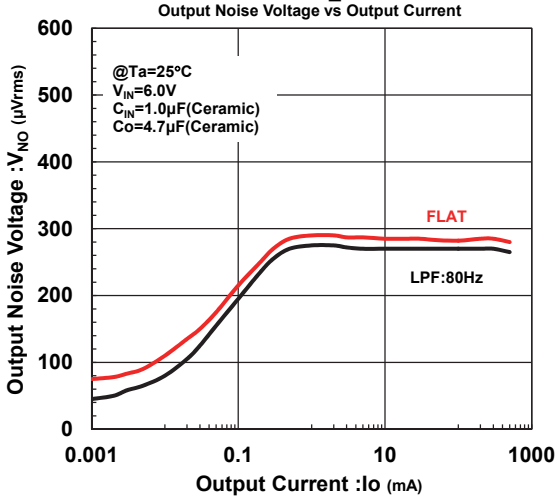

NJW4184_5.0V
Output Voltage vs Temperature

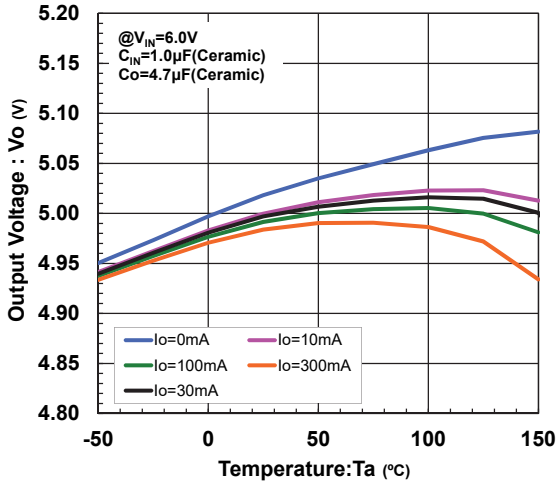

NJW4184_5.0V
Control Voltage vs Temperature

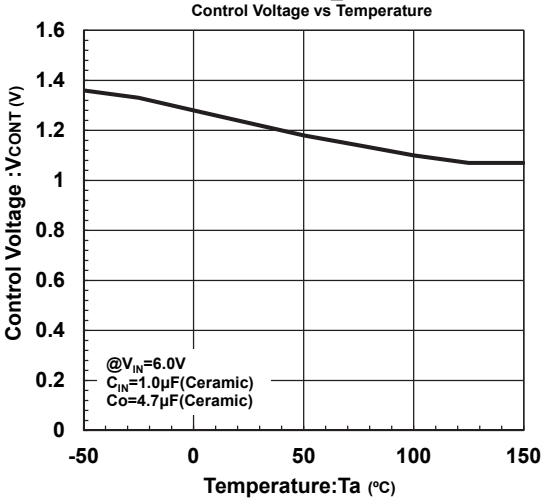

NJW4184_5.0V
Control current vs. Temperature

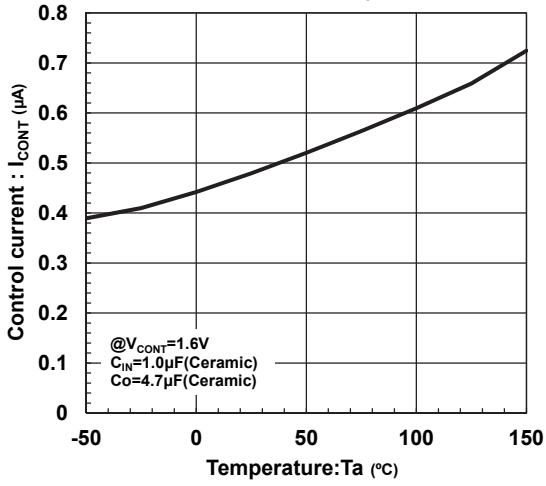

NJW4184_5.0V
Output Peak Current vs Temperature

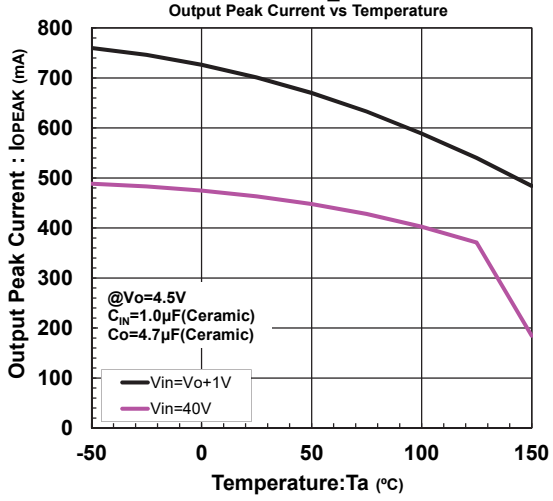

NJW4184_5.0V
Short Circuit Current vs Temperature

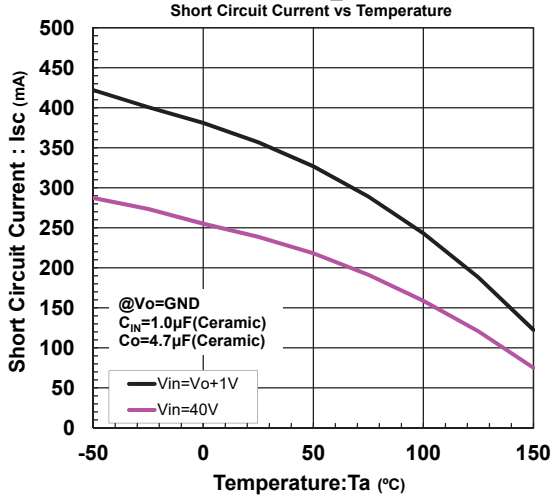

NJW4184_5.0V
Line Regulation vs Temperature

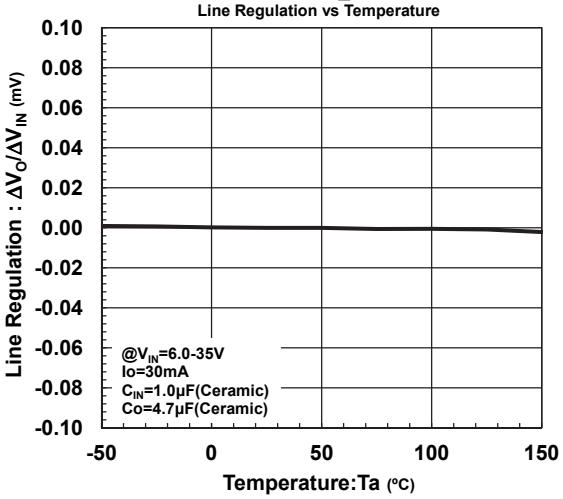

NJW4184_5.0V
Load Regulation vs Temperature

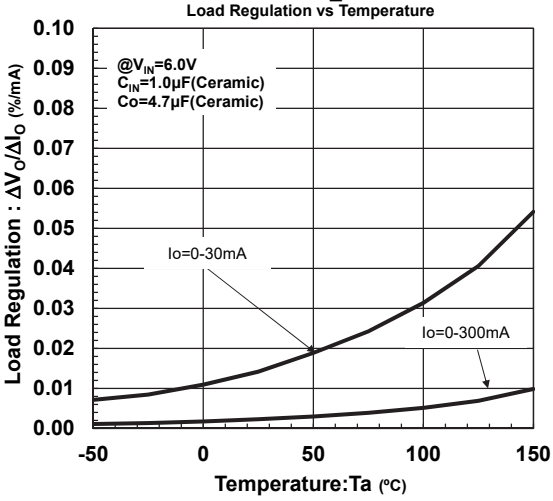

NJW4184_5.0V
Output Voltage vs Temperature

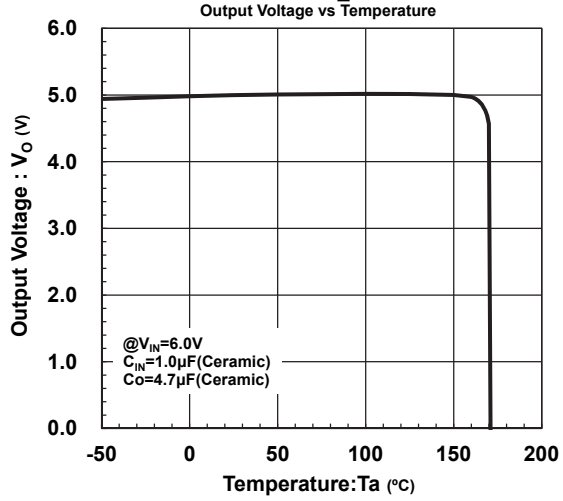

NJW4184_5.0V
Dropout Voltage vs Temperature

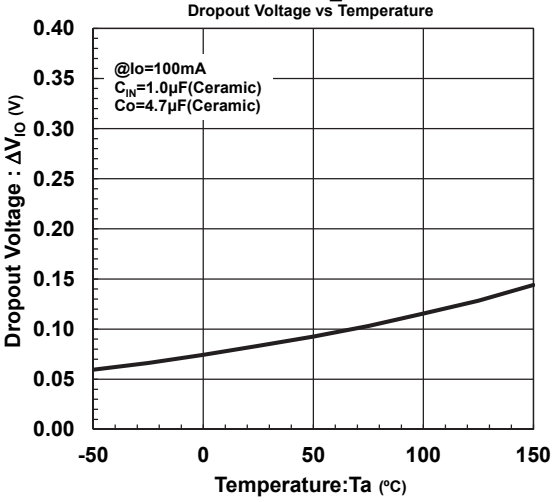

NJW4184(A ver.)_5.0V
Quiescent Current vs Temperature

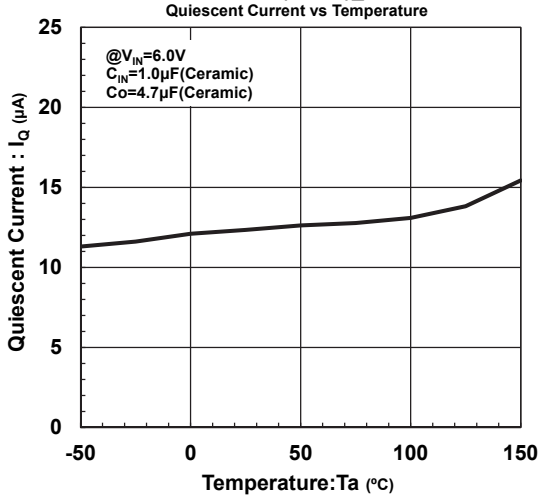

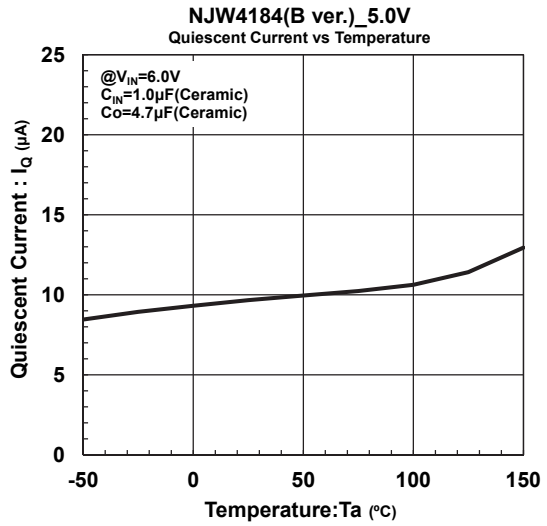

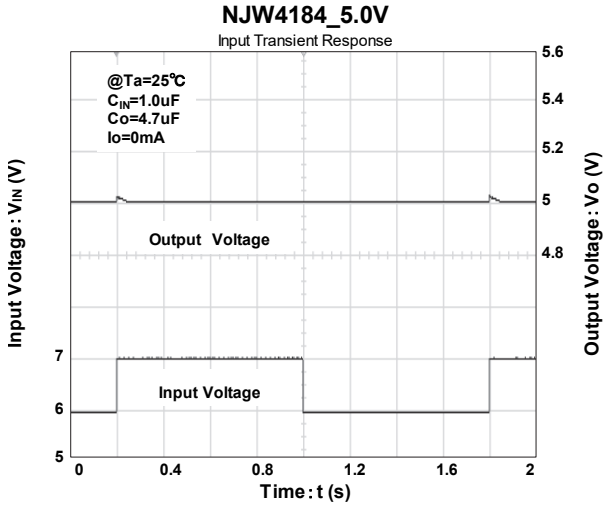

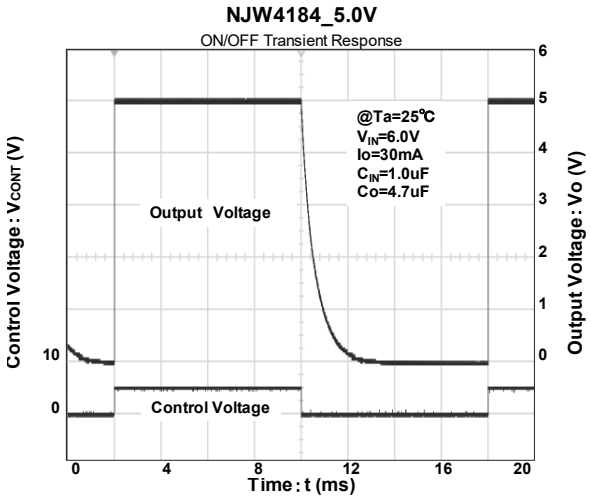

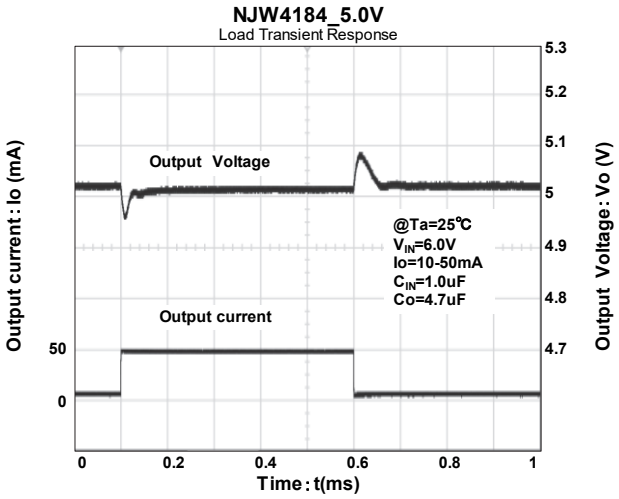

[CAUTION]
The specifications on this datasheet are only given for information , without any guarantee as regards either mistakes or omissions. The application circuits in this datasheet are described only to show representative usages of the product and not intended for the guarantee or permission of any right including the industrial rights.

ENTEGRECİ

Bu belge www.entegreci.com üzerinden sunulmaktadır.

Elektronik komponent tedarikinde Entegreci

Entegreci, Eskişehir merkezli, Türkiye geneline satış yapan bir elektronik komponent mağazasıdır. Entegreler (IC), mikrodenetleyiciler, transistörler, diyotlar, pasif elemanlar, konnektörler, modüller ve geliştirme kartları tek adetten seri üretim adetlerine kadar satılır. Ürün sayfalarında güncel stok durumunu, fiyatı ve datasheet bağlantısını bulabilirsiniz.

Parça koduyla arama

Üretici parça numarasını yazın; stok ve fiyatı hemen görün.

www.entegreci.com

Ürün kategorileri

Entegreden kapasitöre tüm elektronik komponent kategorileri.

Kategorilere göz atın

Üreticiler

Aradığınız üreticinin ürünlerini tek sayfada inceleyin.

Üreticileri görün

Toplu alım ve teklif

Listede olmayan ya da yüksek adetli parçalar için teklif isteyin.

Teklif isteyin

www.entegreci.com | **destek@entegreci.com** | **0850 305 90 34**

Entegreci is an online electronic components store based in Türkiye. Search by manufacturer part number to see stock, prices and datasheets for integrated circuits, microcontrollers, transistors, passive components and connectors, or request a quote for parts that are not listed.

Bu sayfa Entegreci tarafından eklenmiştir. Belgenin önceki sayfaları asıl yayıncısına aittir ve içeriği değiştirilmemiştir; en güncel sürüm için belgenin yayıncısına başvurun.