High Voltage Io=500mA Adjustable Low Dropout Regulator

■ GENERAL DESCRIPTION

The NJW4186 is a high voltage and low current consumption low dropout regulator.

NJW4186 is an adjustable output voltage type, so it can provide the optimum selection for various applications.

NJW4186 is mounted to TO-252-5 package and corresponded to Low ESR capacitor (MLCC).

The wide input range and wide operate temperature make NJW4186 suitable for a, Car accessory, Industrial supplies demanded high reliability.

■ PACKAGE OUTLINE

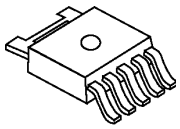

NJW4186DL3

■ FEATURES

- Operating Voltage Range 4.0 to 40V
- Low Current Consumption 55μAtyp. (Ta= 25°C)
- Correspond to Low ESR capacitor (MLCC)
- Output Current I_O(min.)=500mA
- High Precision Reference Voltage V_{ref} ±1.0% (Ta=25°C)
- Available Output Voltage Range 2.0V to 16.0V
- ON/OFF Control
- Internal Thermal Overload Protection
- Internal Over Current Protection
- Package Outline TO-252-5

■ PIN CONFIGURATION

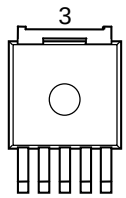

NJW4186DL3

Pin Function

1. V_{IN}
2. CONTROL
3. GND
4. V_{ADJ}
5. V_{OUT}

■ BLOCK DIAGRAM

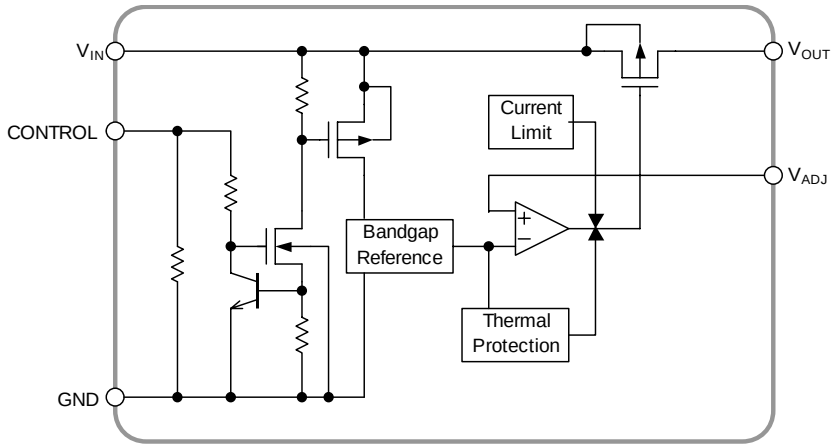

■ ABSOLUTE MAXIMUM RATINGS (Ta=25°C)

PARAMETER	SYNBOL	RATINGS	UNIT
Input Voltage	V_{IN}	-0.3 to +45	V
Control Voltage	V_{CONT}	-0.3 to +45	V
Output Adjustable Voltage	V_{ADJ}	-0.3 to +6	V
Output Voltage	V_{OUT}	-0.3 to V_{IN} ≤+17	V
Power Dissipation	P_D	1190 (*1) 3125 (*2)	mW
Junction Temperature	Tj	-40 to +150	°C
Operating Temperature	Topr	-40 to +85	°C
Storage Temperature	Tstg	-40 to +150	°C

(*1): Mounted on glass epoxy board. (76.2×114.3×1.6mm:based on EIA/JDEC standard size, 2Layers, Cu area 100mm^2)

(*2): Mounted on glass epoxy board. (76.2×114.3×1.6mm:based on EIA/JDEC standard, 4Layers)

(For 4Layers: Applying 74.2 x 74.2mm inner Cu area and thermal via hole to a board based on JEDEC standard JESD51-5)

■ INPUT VOLTAGE RANGE

V_{IN}=4.0V〜40V

■ ELECTRICAL CHARACTERISTICS

Unless otherwise noted, $V_O \geq 3V$: $V_{IN}=V_O+1V$, $C_{IN}=1.0\mu F$, $C_O=2.2\mu F$, R1=500kΩ, Ta=25°C
$V_O<3V$: $V_{IN}=4.0V$, $C_{IN}=1.0\mu F$, $C_O=4.7\mu F$, R1=500kΩ, Ta=25°C

PARAMETER	SYMBOL	TEST CONDITION	MIN.	TYP.	MAX.	UNIT
Reference Voltage	V_{ref}		-1.0%	1.29	+1.0%	V
Quiescent Current	I_Q	I_O = 0mA, except I_{CONT}	-	55	90	μA
Quiescent Current at Control OFF	$I_{Q\,(OFF)}$	V_{CONT} = 0V	-	-	1	μA
Output Current	I_O	$V_O \times 0.9$	500	-	-	mA
Line Regulation	$\Delta V_O/\Delta V_{IN}$	$V_{IN} = V_O+1V \sim 40V$, I_O=30mA($V_O \geq 3V$) V_{IN} = 4V ~ 40V, I_O=30mA($V_O<3V$)	-	-	0.015	%/V
Load Regulation	$\Delta V_O/\Delta I_O$	I_O = 0mA ~ 500mA	-	-	0.006	%/mA
Ripple Rejection	RR	ein = 200mVrms,f=1kHz, I_O=30mA, V_O = 3.3V	-	60	-	dB
Dropout Voltage	ΔV_{IO}	I_O = 300mA	-	0.27	0.42	V
Average Temperature Coefficient of Output Voltage	$\Delta V_O/\Delta Ta$	Ta = 0 ~ 85°C, I_O=30mA	-	±50	-	ppm/°C
Control Current	I_{CONT}	V_{CONT} = 1.6V	-	1	3	μA
Control Voltage for ON-state	$V_{CONT(ON)}$		1.6	-	-	V
Control Voltage for OFF-state	$V_{CONT(OFF)}$		-	-	0.6	V
Available Output Voltage Range	V_O		2.0	-	16	V

* These parameters are tested by Pulse Measurement.

■ POWER DISSIPATION vs. AMBIENT TEMPERATURE

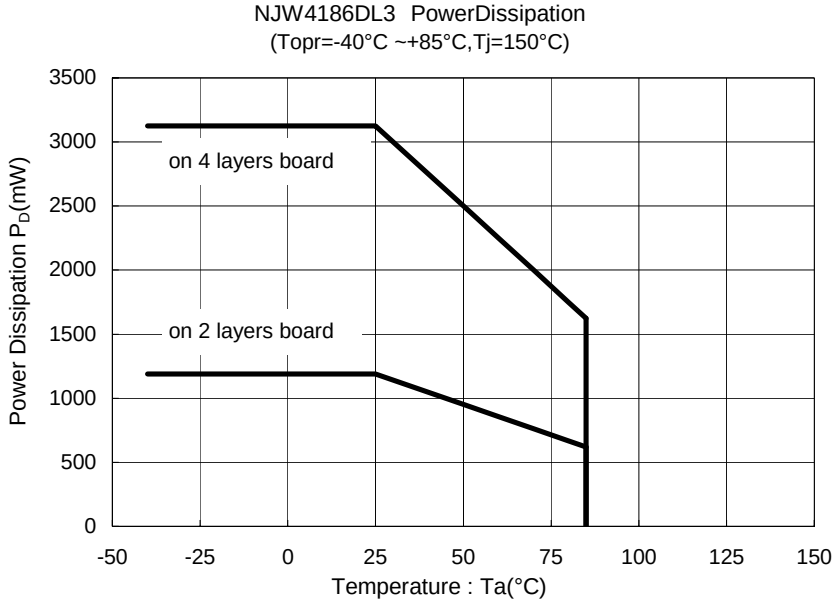

■ TEST CIRCUIT

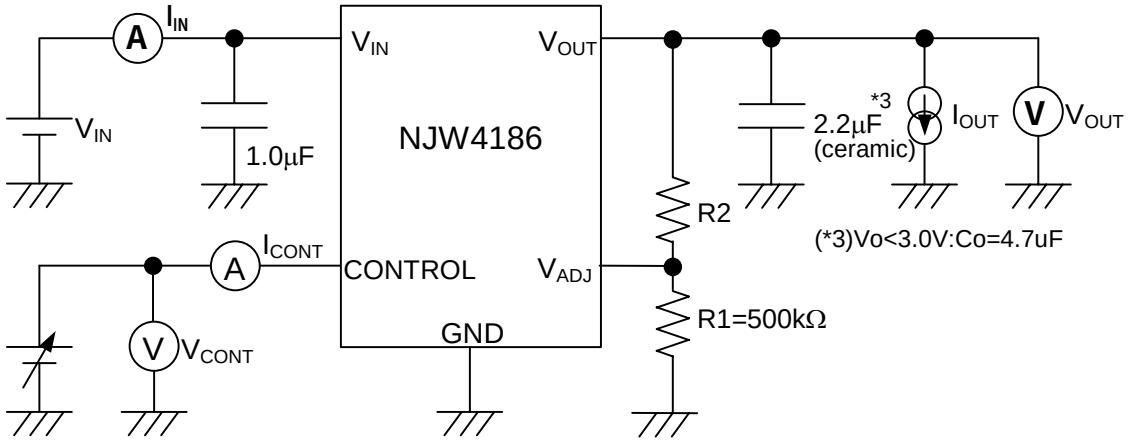

■ TYPICAL APPLICATION

① In the case where ON/OFF Control is not required

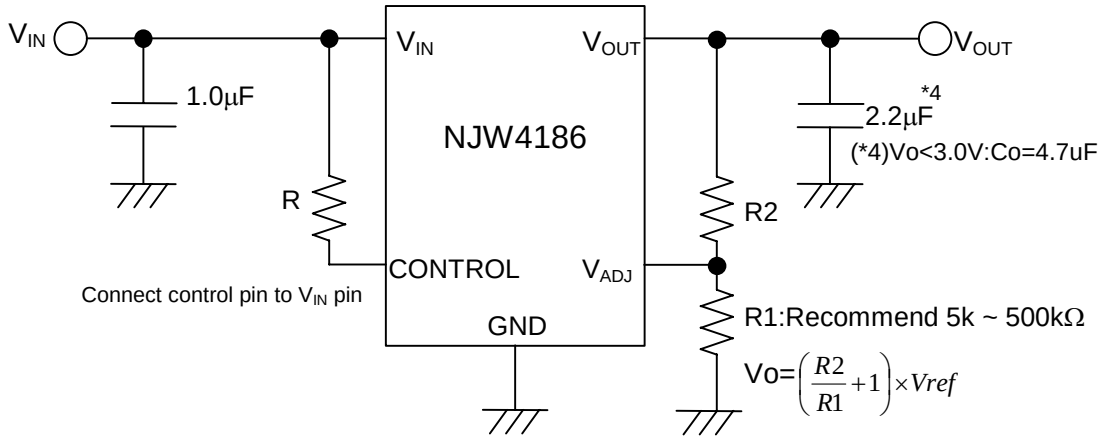

② In use of ON/OFF CONTROL:

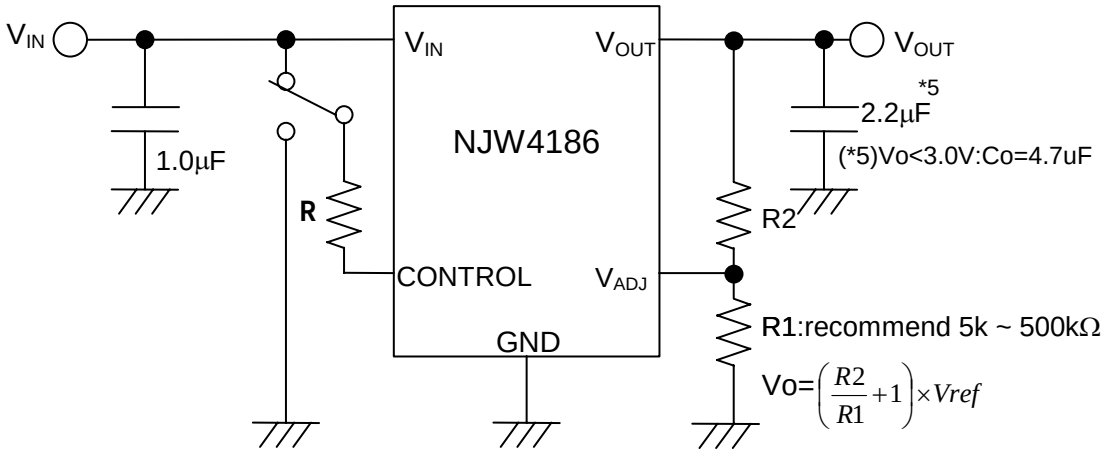

State of control pin:

•"H"→ output is enabled.

•"L" or "open" → output is disabled.

*In the case of using a resistance "R" between V_{IN} and control.

If this resistor is inserted, it can reduce the control current when the control voltage is high.

The applied voltage to control pin should set to consider voltage drop through the resistor "R" and the minimum control voltage for ON-state.

The $V_{CONT\ (ON)}$ and I_{CONT} have temperature dependence as shown in the "Control Current vs. Temperature" and " Control Voltage vs. Temperature" characteristics. Therefore, the resistance "R" should be selected to consider the temperature characteristics.

*Feed back Resistance R1

The output voltage may rise against the set point by the leak current from the V_{OUT} pin at high temperature when this resistance is set too big.

Conversely, the current flowing to R1 grows big when R1 is set too small, and make the consumption current increase.

From the above, recommend 5kΩ to 500kΩ as a set range of R1.

But, the output noise voltage tends to increase with the resistance value of R1 become small.

Especially, In the case of low output voltage setting such as V_{OUT}=2.0V, there is the possibility that the output voltage becomes unstable in the condition of recommended output capacitor (Co=4.7uF) and too small feedback resistor (R1).

In that case, It can improve by making Co or R1 bigger.

Show a characteristic example when changed a condition at the time of the Vo=2.0V / 5.0V setting for reference.

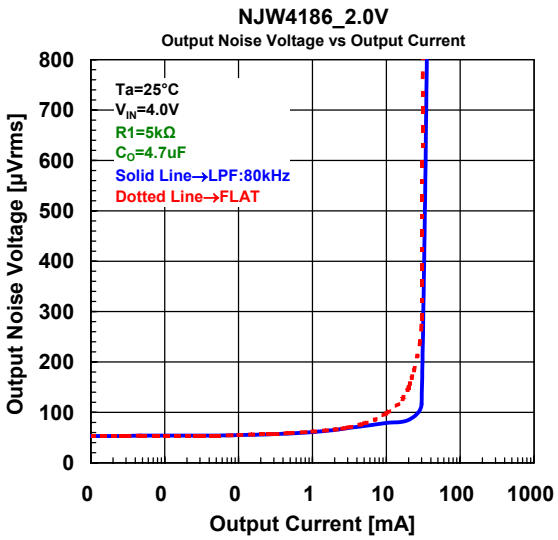

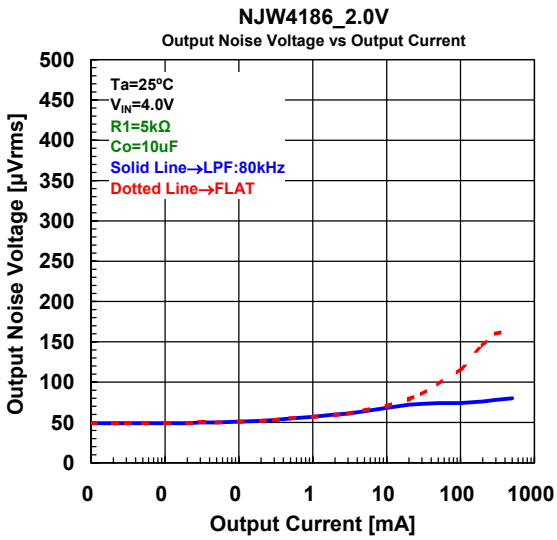

V_{OUT} =2.0VSetting (R1=5k,Co=4.7μF/Co=10μF)

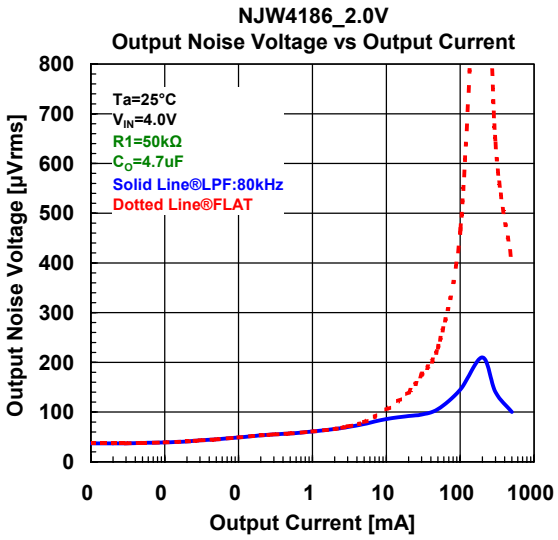

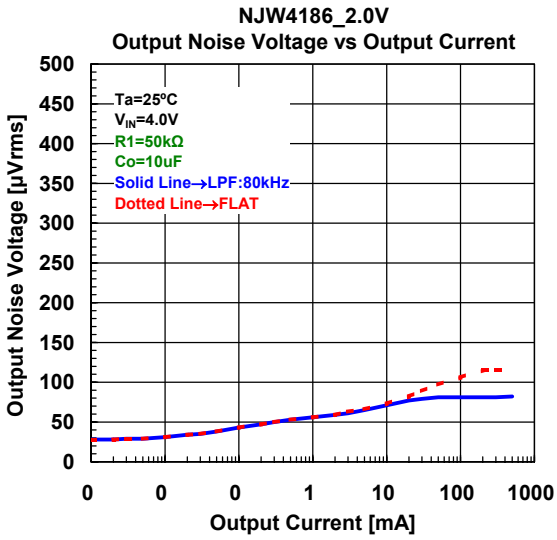

V_{OUT} =2.0VSetting (R1=50k,Co=4.7μF/Co=10μF)

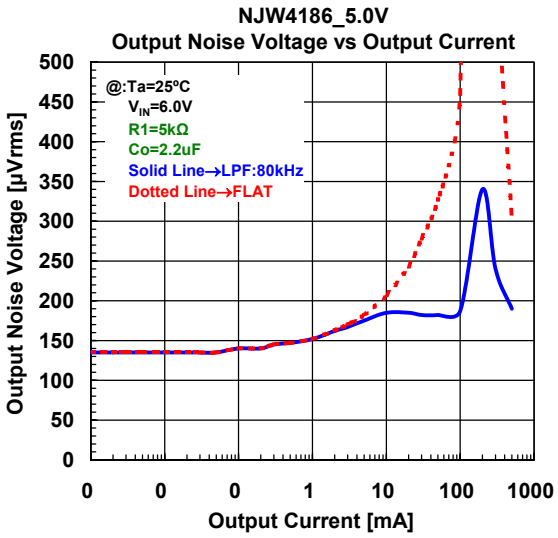

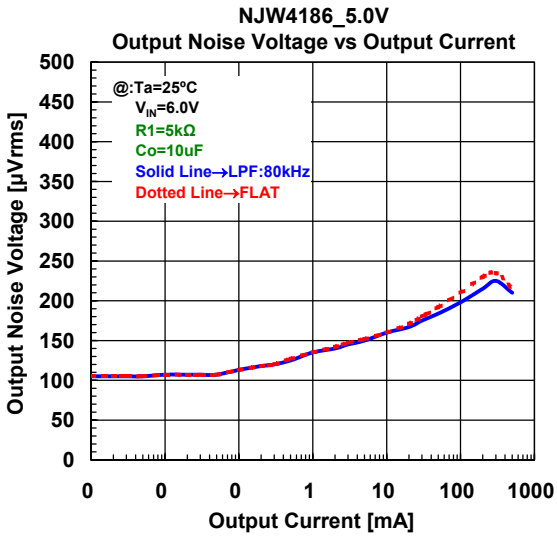

V_{OUT} =5.0VSetting (R1=5k,Co=2.2µF/Co=10µF)

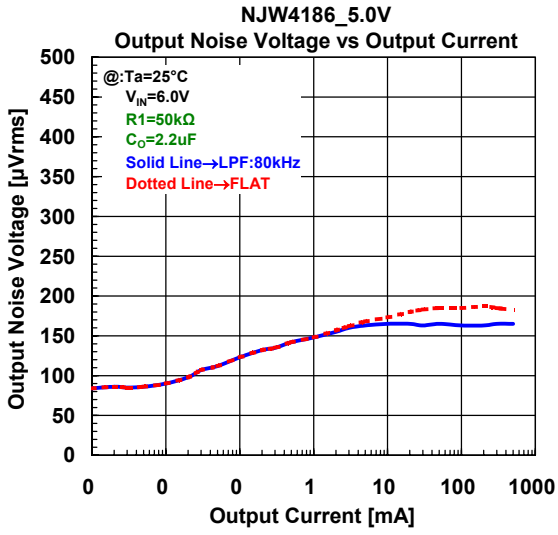

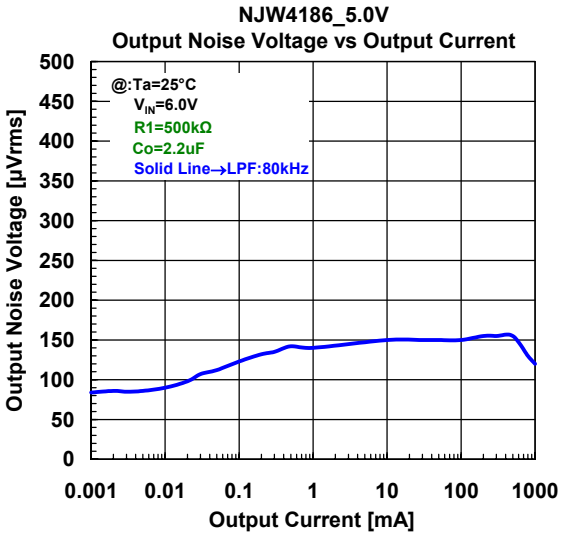

V_{OUT} =5.0VSetting (R1=50k / R1=500k, Co=2.2µF)

*Input Capacitor C_{IN}

Input Capacitor C_{IN} is required to prevent oscillation and reduce power supply ripple for applications when high power supply impedance or a long power supply line.

Therefore, use the recommended C_{IN} value (refer to conditions of ELECTRIC CHARACTERISTIC) or larger and should connect between GND and V_{IN} as shortest path as possible to avoid the problem.

*Output Capacitor C_O

Output capacitor (C_O) will be required for a phase compensation of the internal error amplifier.

The capacitance and the equivalent series resistance (ESR) influence to stable operation of the regulator.

Use of a smaller C_O may cause excess output noise or oscillation of the regulator due to lack of the phase compensation.

On the other hand, Use of a larger C_O reduces output noise and ripple output, and also improves output transient response when rapid load change.

Therefore, use the recommended C_O value (refer to conditions of ELECTRIC CHARACTERISTIC) or larger and should connect between GND and V_{OUT} as shortest path as possible for stable operation

The recommended capacitance depends on the output voltage rank. Especially, low voltage regulator requires larger C_O value.

In addition, you should consider varied characteristics of capacitor (a frequency characteristic, a temperature characteristic, a DC bias characteristic and so on) and unevenness peculiar to a capacitor supplier enough.

When selecting C_O, recommend that have withstand voltage margin against output voltage and superior temperature characteristic.

*The notes of the evaluation when output pin is shorted to GND

When evaluated short circuit test, the IC may break down because of regenerated energy by the parasitic inductance included in wiring pattern.

It phenomenon appears conspicuously when output voltage is high(Vo=8.0V or more)or connected to inductive load.

In case of short circuit in actual application, not likely to destruction of IC because of some of Resistance exist between load.

If happened above phenomenon by the short circuit test with the actual application, recommend connecting schottky barrier diode(SBD) between Vo pin and the GND or using output condensers that have ESR more than 2ohrm like a tantalum or aluminum electrolytic capacitor.(see below figure)

(a)In case of insert Schottky barrier diode between V_{OUT} pin- GND

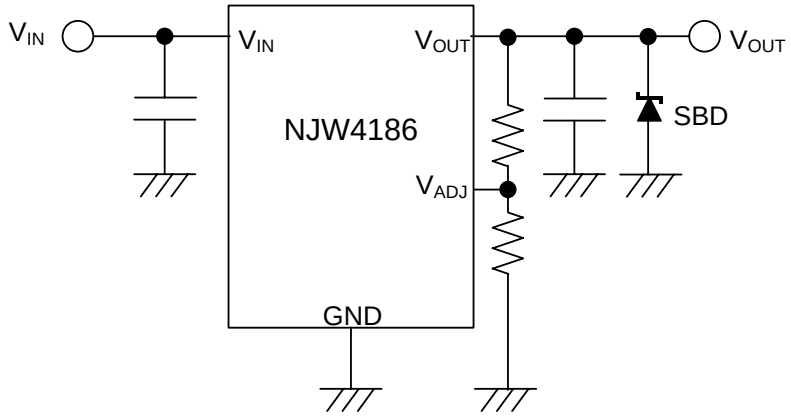

(b) In case of using the electrolysis condenser or insert series resistance

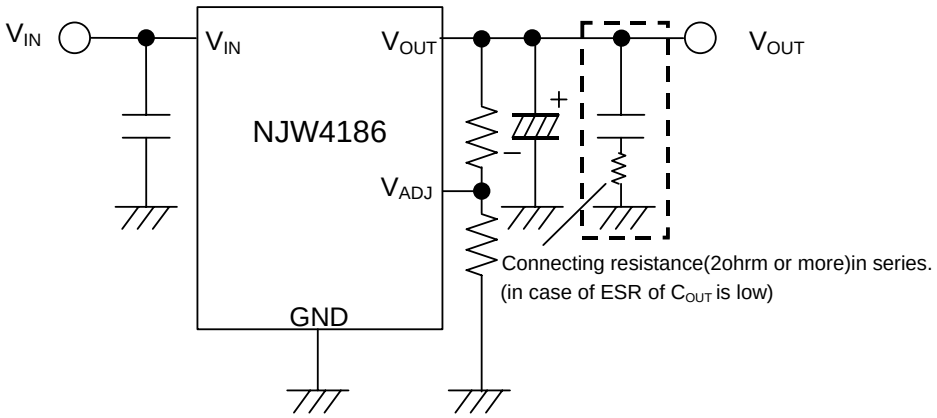

■ TYPICAL CHARACERISTICS

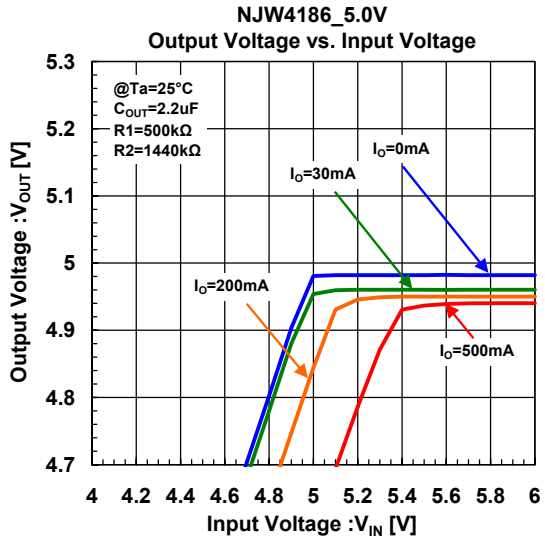

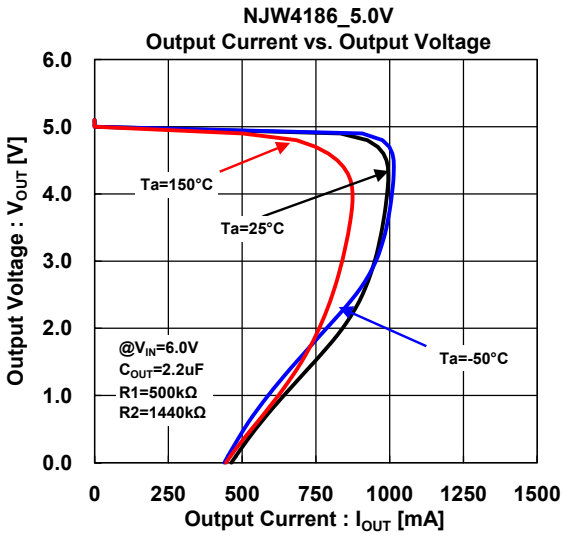

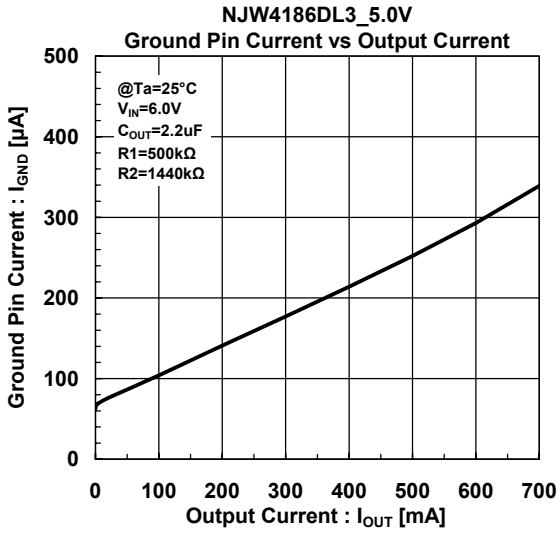

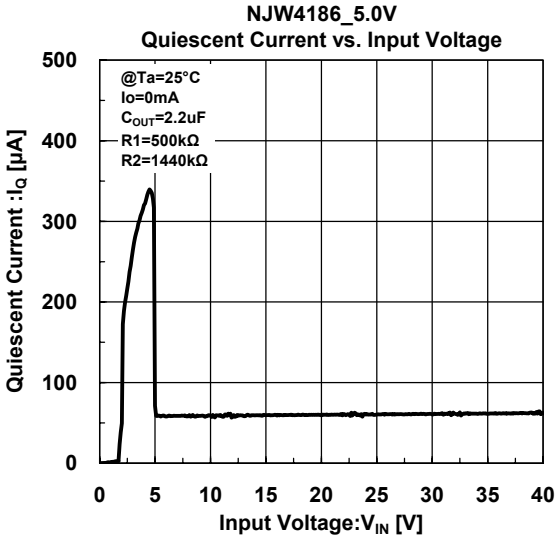

NJW4186_5.0V
Output Voltage vs. Control Voltage

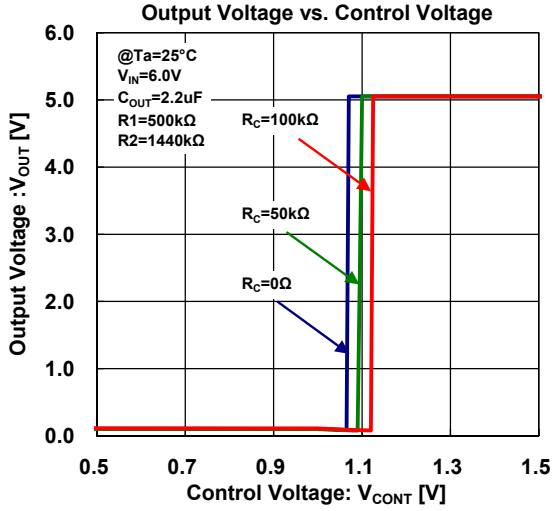

NJW4186_5.0V
Control Current vs. Control Voltage

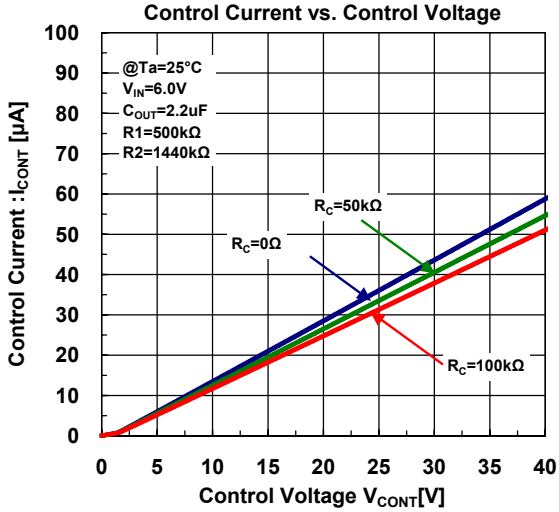

NJW4186_5.0V
Load Regulation vs. Output Current

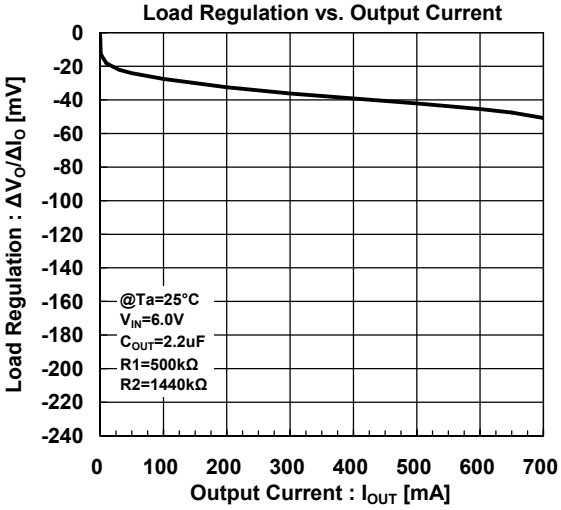

NJW4186_5.0V
Peak Output Current vs. Input Voltage

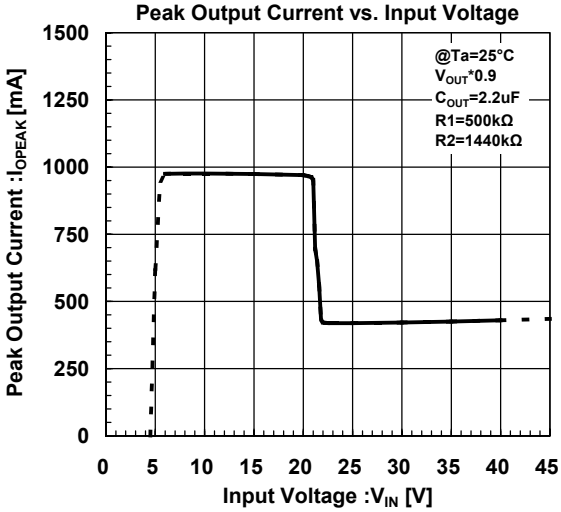

NJW4186_5.0V
Dropout Voltage vs. Output Current

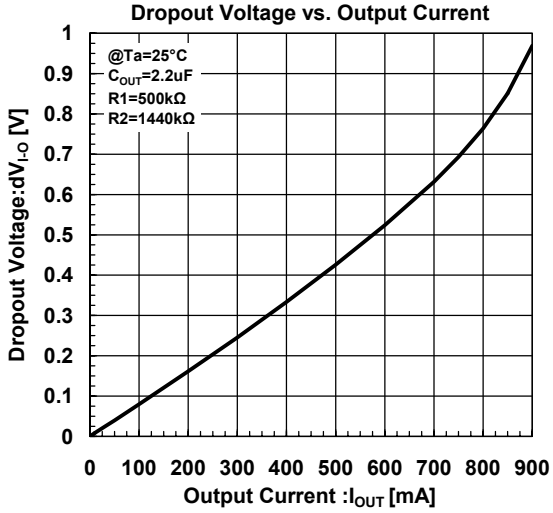

NJW4186_5.0V
Ripple Rejection Ratio vs. Frequency

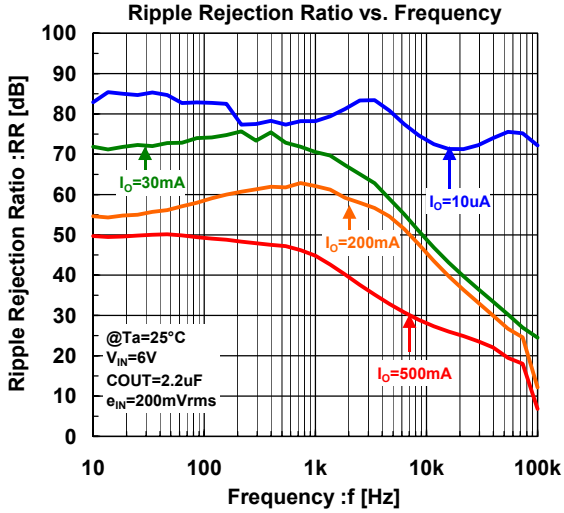

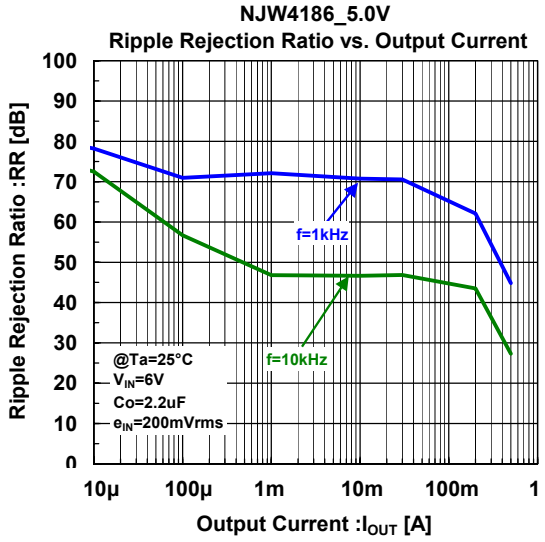
NJW4186_5.0V
Ripple Rejection Ratio vs. Output Current
Ripple Rejection Ratio :RR [dB]
Output Current :IOUT [A]
f=1kHz
f=10kHz
@Ta=25°C
VIN=6V
Co=2.2uF
eIN=200mVrms

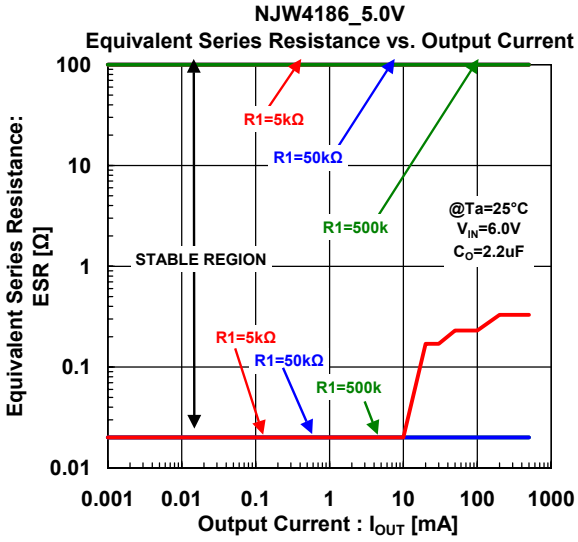
NJW4186_5.0V
Equivalent Series Resistance vs. Output Current
Equivalent Series Resistance: ESR [Ω]
Output Current : IOUT [mA]
R1=5kΩ
R1=50kΩ
R1=500k
STABLE REGION
@Ta=25°C
VIN=6.0V
CO=2.2uF

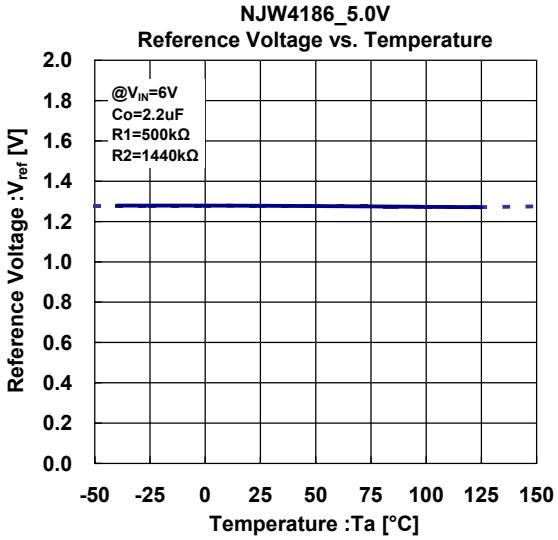
NJW4186_5.0V
Reference Voltage vs. Temperature
Reference Voltage :Vref [V]
Temperature :Ta [°C]
@VIN=6V
Co=2.2uF
R1=500kΩ
R2=1440kΩ

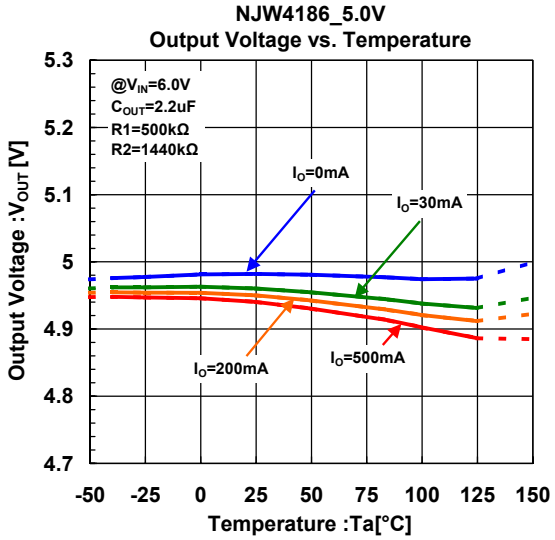
NJW4186_5.0V
Output Voltage vs. Temperature
Output Voltage :VOUT [V]
Temperature :Ta[°C]
@VIN=6.0V
COUT=2.2uF
R1=500kΩ
R2=1440kΩ
IO=0mA
IO=30mA
IO=200mA
IO=500mA

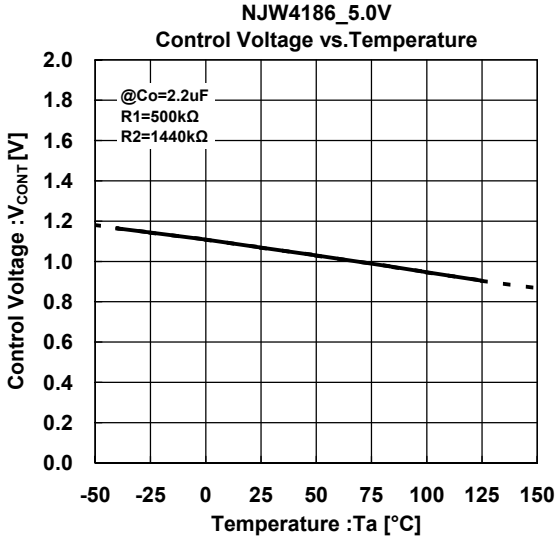
NJW4186_5.0V
Control Voltage vs.Temperature
Control Voltage :VCONT [V]
Temperature :Ta [°C]
@Co=2.2uF
R1=500kΩ
R2=1440kΩ

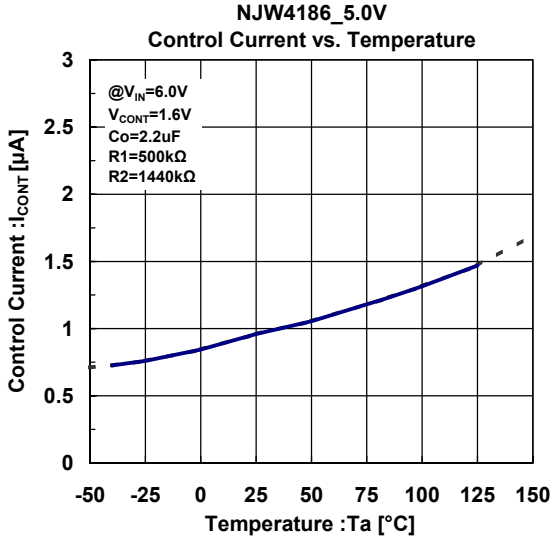
NJW4186_5.0V
Control Current vs. Temperature
Control Current :ICONT [µA]
Temperature :Ta [°C]
@VIN=6.0V
VCONT=1.6V
Co=2.2uF
R1=500kΩ
R2=1440kΩ

NJW4186_5.0V
Peak Output Current vs. Temperature

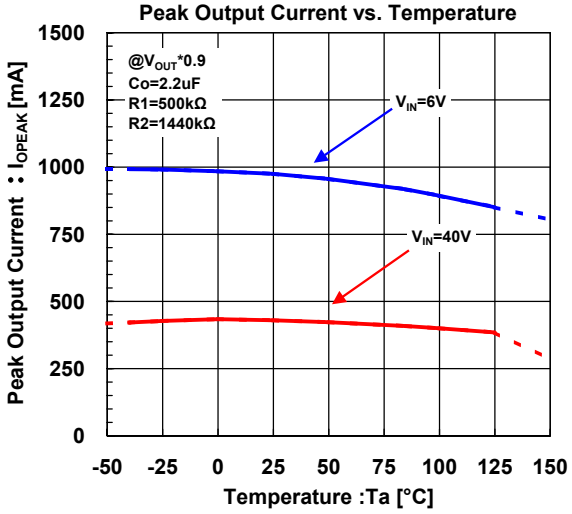

NJW4186_5.0V
Short Cuircuit Current vs. Temperature

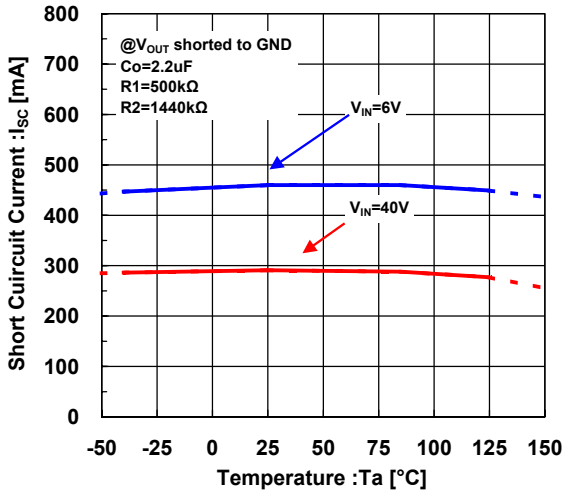

NJW4186_5.0V
Line Regulation vs.Temperature

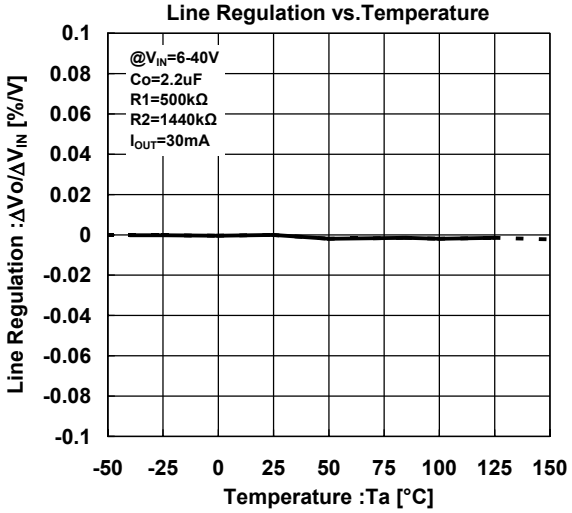

NJW4186_5.0V
Load Regulation vs. Temperature

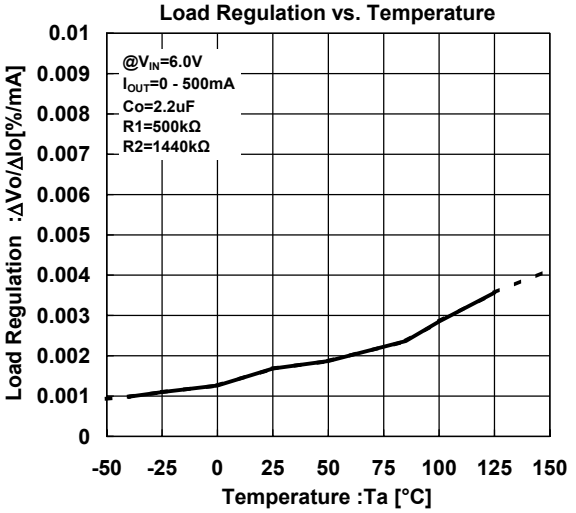

NJW4186_5.0V
Output Voltage vs. Temperature

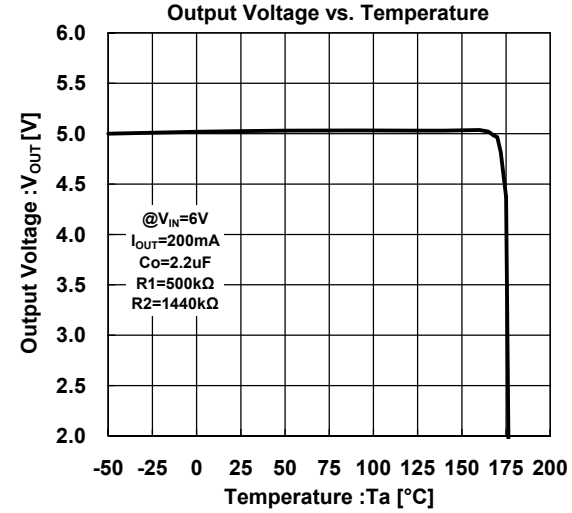

NJW4186_5.0V
Dropout Voltage vs. Temperature

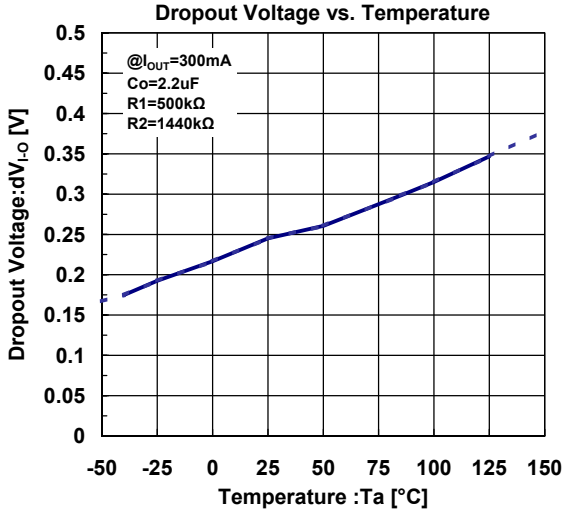

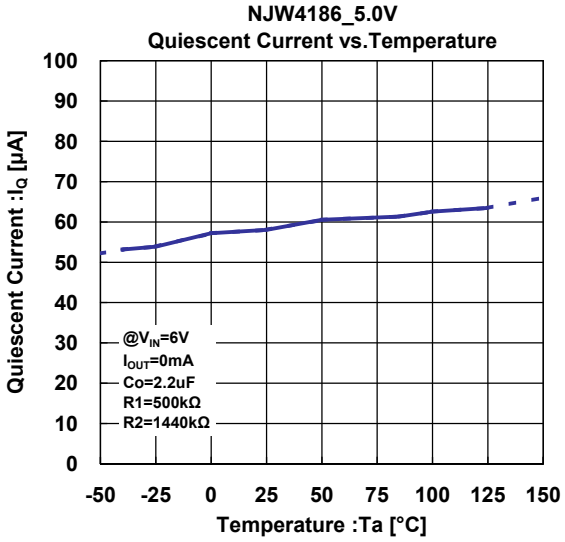
NJW4186_5.0V
Quiescent Current vs.Temperature
Quiescent Current :IQ [µA]
Temperature :Ta [°C]
@VIN=6V
IOUT=0mA
Co=2.2uF
R1=500kΩ
R2=1440kΩ

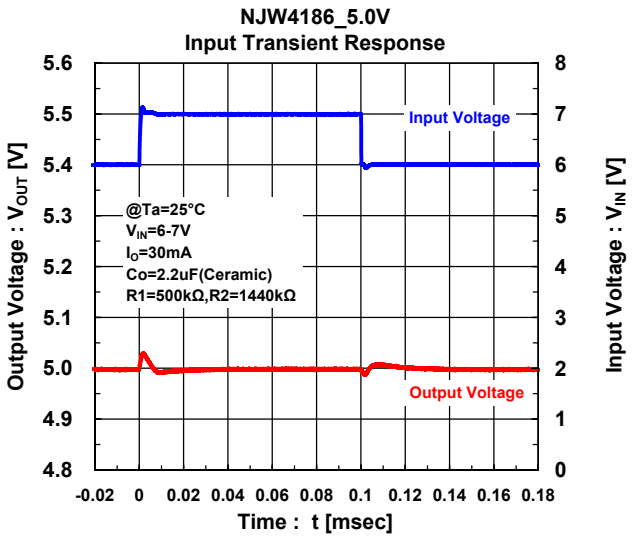
NJW4186_5.0V
Input Transient Response
Output Voltage : VOUT [V]
Input Voltage : VIN [V]
Time : t [msec]
Input Voltage
Output Voltage
@Ta=25°C
VIN=6-7V
IO=30mA
Co=2.2uF(Ceramic)
R1=500kΩ,R2=1440kΩ

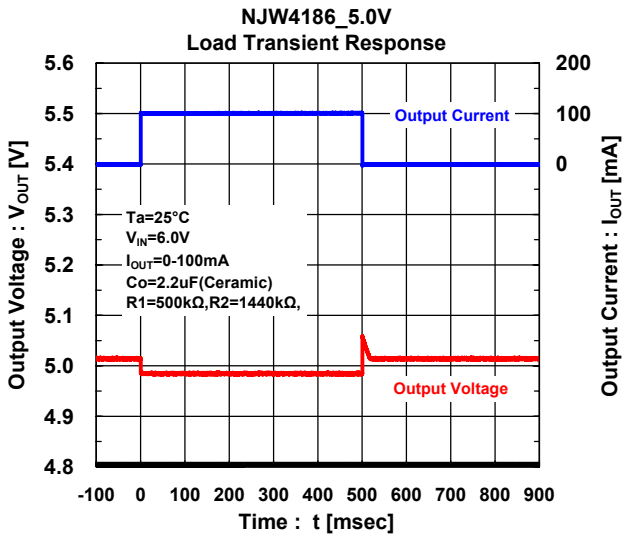
NJW4186_5.0V
Load Transient Response
Output Voltage : VOUT [V]
Output Current : IOUT [mA]
Time : t [msec]
Output Current
Output Voltage
Ta=25°C
VIN=6.0V
IOUT=0-100mA
Co=2.2uF(Ceramic)
R1=500kΩ,R2=1440kΩ,

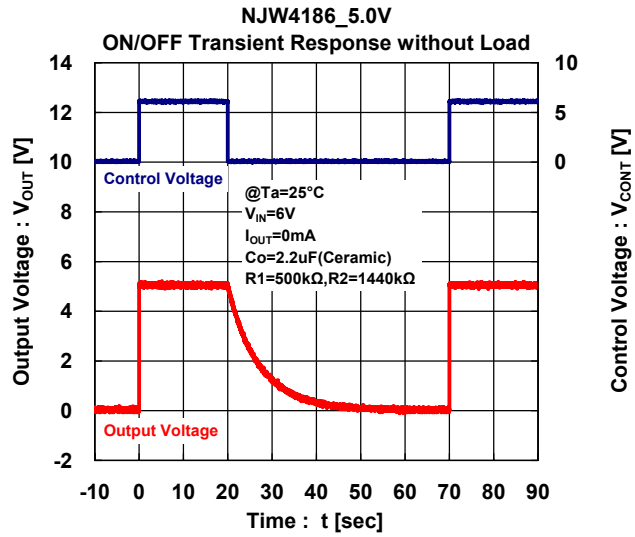
NJW4186_5.0V
ON/OFF Transient Response without Load
Output Voltage : VOUT [V]
Control Voltage : VCONT [V]
Time : t [sec]
Control Voltage
Output Voltage
@Ta=25°C
VIN=6V
IOUT=0mA
Co=2.2uF(Ceramic)
R1=500kΩ,R2=1440kΩ

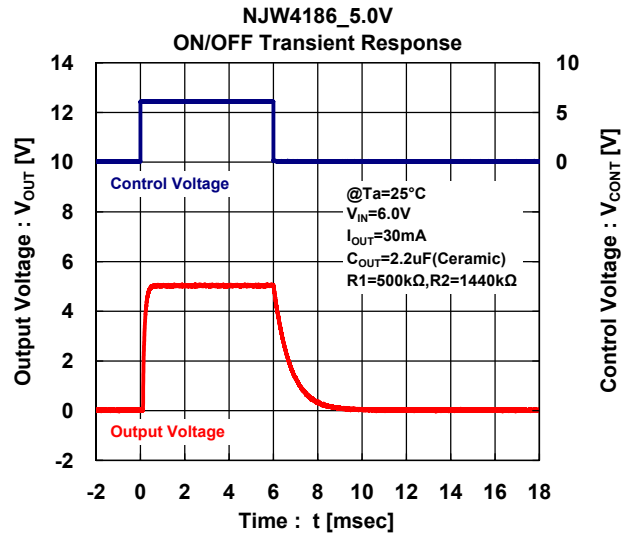
NJW4186_5.0V
ON/OFF Transient Response
Output Voltage : VOUT [V]
Control Voltage : VCONT [V]
Time : t [msec]
Control Voltage
Output Voltage
@Ta=25°C
VIN=6.0V
IOUT=30mA
COUT=2.2uF(Ceramic)
R1=500kΩ,R2=1440kΩ

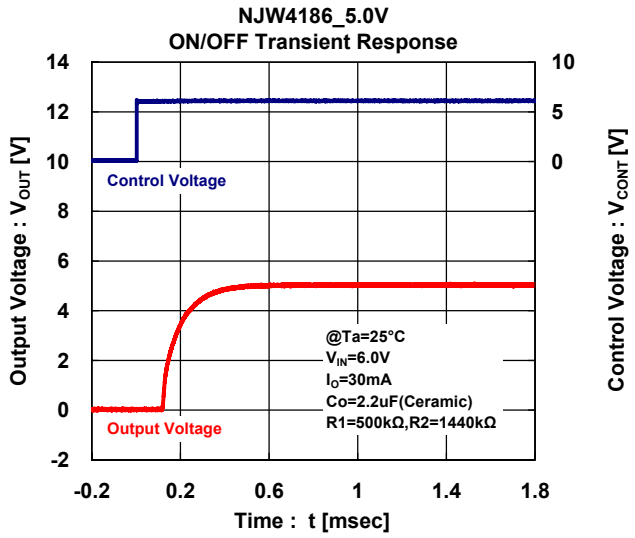

[CAUTION]
The specifications on this databook are only given for information , without any guarantee as regards either mistakes or omissions. The application circuits in this databook are described only to show representative usages of the product and not intended for the guarantee or permission of any right including the industrial rights.

ENTEGRECİ

Bu belge www.entegreci.com üzerinden sunulmaktadır.

Elektronik komponent tedarikinde Entegreci

Entegreci, Eskişehir merkezli, Türkiye geneline satış yapan bir elektronik komponent mağazasıdır. Entegreler (IC), mikrodenetleyiciler, transistörler, diyotlar, pasif elemanlar, konnektörler, modüller ve geliştirme kartları tek adetten seri üretim adetlerine kadar satılır. Ürün sayfalarında güncel stok durumunu, fiyatı ve datasheet bağlantısını bulabilirsiniz.

Parça koduyla arama

Üretici parça numarasını yazın; stok ve fiyatı hemen görün.

www.entegreci.com

Ürün kategorileri

Entegreden kapasitöre tüm elektronik komponent kategorileri.

Kategorilere göz atın

Üreticiler

Aradığınız üreticinin ürünlerini tek sayfada inceleyin.

Üreticileri görün

Toplu alım ve teklif

Listede olmayan ya da yüksek adetli parçalar için teklif isteyin.

Teklif isteyin

www.entegreci.com | **destek@entegreci.com** | **0850 305 90 34**

Entegreci is an online electronic components store based in Türkiye. Search by manufacturer part number to see stock, prices and datasheets for integrated circuits, microcontrollers, transistors, passive components and connectors, or request a quote for parts that are not listed.

Bu sayfa Entegreci tarafından eklenmiştir. Belgenin önceki sayfaları asıl yayıncısına aittir ve içeriği değiştirilmemiştir; en güncel sürüm için belgenin yayıncısına başvurun.