3A ADJUSTABLE LOW VOLTAGE LOW DROPOUT CMOS REGULATOR

Description

The PAM3131 is a 3A CMOS adjustable LDO regulator that features a low quiescent current, ultra low input, output, and dropout voltages, as well as over temperature protection. It is available in TO-263 and PSOP-8 (Exposed Pad) packages. The output voltage is adjustable from 0.9V to 3.3V. The PAM3131 is stable with a ceramic output capacitor of 1.0µF or higher.

This family of regulators can provide either a stand alone power supply solution or act as a post regulator for switch mode power supplies. They are particularly well suited for applications requiring low input and output voltages.

Features

- Low-Dropout Regulator Supports Input Voltages Down to 1.4V
- Low Dropout Voltage: 300mV@ 3A
- Output Voltage Adjustable from 0.9V-3.3V
- Stable with a Ceramic Output Capacitor of 1.0µF or Higher
- Low Quiescent Current
- Current Limit
- Over Temperature Shutdown
- Short Circuit Current Protection
- Low Temperature Coefficient
- Standard TO-263 and PSOP-8 (Exposed Pad) Packages
- Pb-Free Package

Pin Assignments

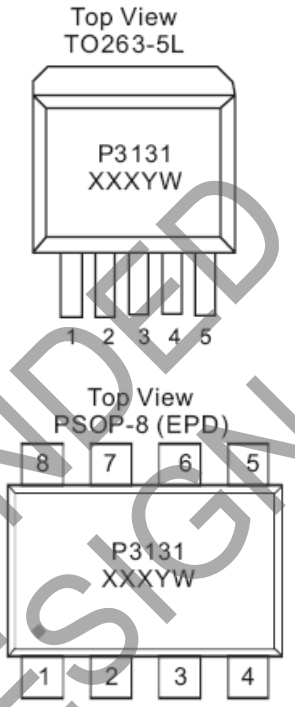

Applications

- DSP, FPGA, and Microprocessor Power Supplies
- 1.2V Core Voltage for DSPs
- SATA Power Supply
- LCD TV/ Monitors
- Wireless Devices
- Communication Devices
- Portable Electronics
- Post Regulator for SMPS

Typical Applications Circuit

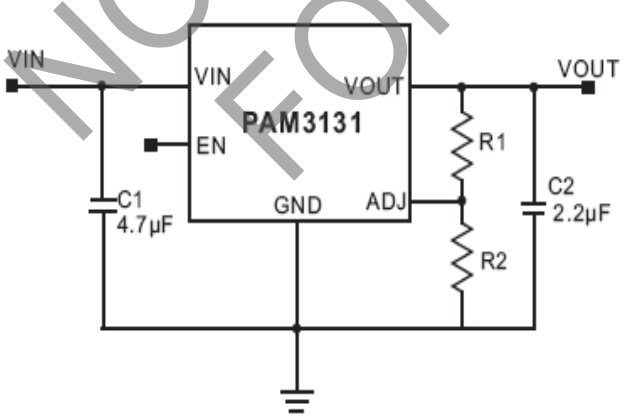

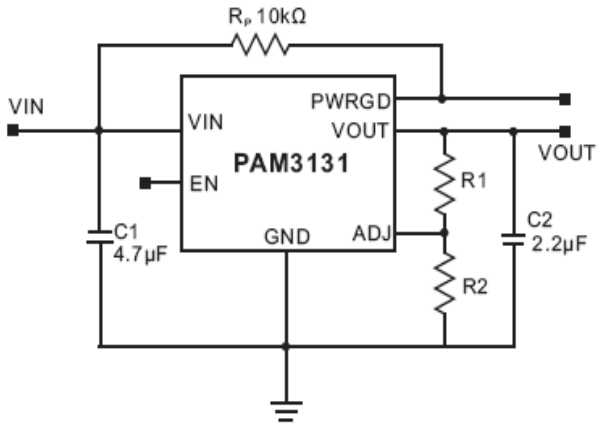

NOT RECOMMENDED FOR NEW DESIGN

© Diodes Incorporated

Pin Description

Pin Name	Pin Number		Function
	TO263-5L	PSOP-8(EPD)	
VIN	1	2	Input
EN	2	3	Enable Pin
ADJ	4	6	Adjustable Pin
VOUT	5	7	Output
GND	3	1, 4, 8	Ground
PWRGD	—	5	Power Good

Functional Block Diagram

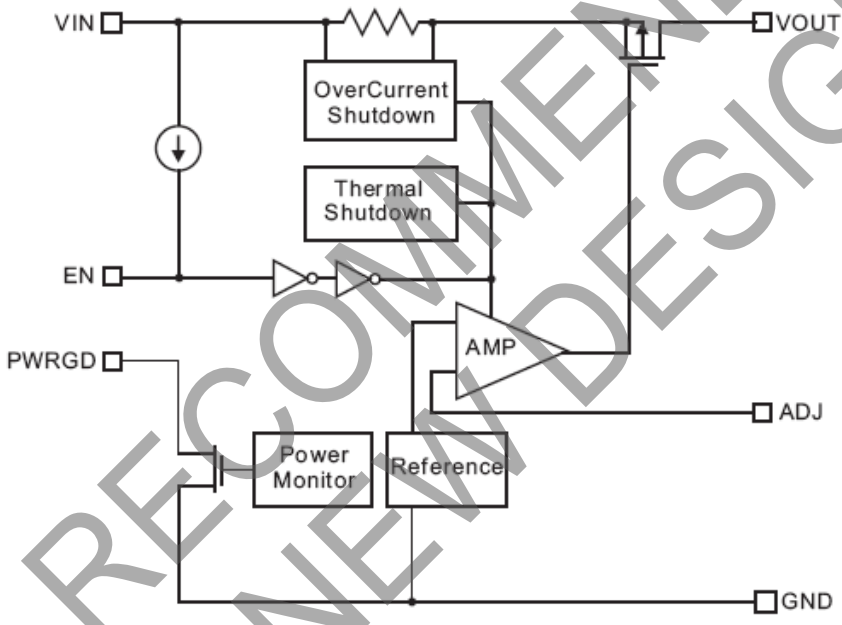

NOT RECOMMENDED FOR NEW DESIGN

Absolute Maximum Ratings (@T_A = +25°C, unless otherwise specified.)

These are stress ratings only and functional operation is not implied. Exposure to absolute maximum ratings for prolonged time periods may affect device reliability. All voltages are with respect to ground.

Parameter	Rating	Unit
Input Voltage	4.0	V
Output Pin Voltage	-0.3 to V_{IN} +0.3	V
Operation Temperature Range	-40 to +85	°C
Operation Junction Range	-40 to +125	°C
Maximum Output Current	$P_D/(V_{IN}–V_O)$	—
Storage Temperature	-65 to +150	°C
Maximum Junction Temperature	150	°C
Soldering Temperature	300, (5sec)	°C

© Diodes Incorporated

Recommended Operating Conditions (@T_A = +25°C, unless otherwise specified.)

Parameter	Rating	Unit
Supply Voltage Range	1.4 to 3.6	V
Operation Temperature Range	-40 to +85	°C
Junction Temperataure Range	-40 to +125	

Thermal Information

Parameter	Symbol	Package	Max	Unit
Thermal Resistance (Junction to Case)	θ_{JC}	TO-263	7	°C/W
		PSOP-8	10	
Thermal Resistance (Junction to Ambient)	θ_{JA}	TO-263	35	
		PSOP-8	50	
Internal Power Dissipation (T_A = 25°C)	P_D	TO-263	2800	mW
		PSOP-8	2000	

NOT RECOMMENDED FOR NEW DESIGN

© Diodes Incorporated

Electrical Characteristics (@T_A = +25°C, V_{IN} = V_O +1V, C_{IN} = 4.7µF, C_O = 4.7µF, unless otherwise specified.)

Parameter	Symbol	Test Conditions		Min	Typ	Max	Units
Input Voltage Range	V_{IN}			Note 1		3.6	V
ADJ Reference Voltage	V_{REF}	I_O = 100mA		0.882	0.900	0.918	V
Dropout Voltage	V_{DROP}	I_O = 500mA	V_O = 0.9V		330	500	mV
			V_O = 1.0V		220	400	
			2.5V > V_O ≥ 1.2V		50	200	
			V_O ≥ 2.5V		40	150	
		I_O = 3.0A	V_O = 0.9V		500		
			V_O = 1.0V		400		
			2.5V > V_O ≥ 1.2V		350		
			V_O ≥ 2.5V		300		
Short Circuit Current	I_{SC}	V_O < 0.3V			1.0		A
Output Current	I_O			3.0		Note 2	A
Quiescent Current	I_Q	I_O = 0mA			90	150	µA
Ground Pin Current	I_{GND}	V_O > 0.8V				1.0	mA
Line Regulation	LNR	V_O ≤ 2.5V, I_O = 10mA V_{IN} = V_O +0.5V to V_O +1.5V			0.2	1.0	%/V
		V_O > 2.5V, I_O = 10mA V_{IN} = 3.3V to 3.6V					
Load Regulation	LDR	I_O = 1mA to 3.0A, V_{IN} = V_O +0.5A			0.5	2	%/A
Over Temperature Shutdown	OTS				150		°C
Over Temperature Hysteresis	OTH				50		°C
Temperature Coefficient	T_C				40		ppm/°C
Power Supply Ripple Rejection	PSRR	I_O = 100mA, V_O = 1.5V	f = 100Hz		64		dB
			f = 1kHz		58		
Output Noise	Vn	f = 10Hz to 100kHz			40		$µV_{RMS}$

Notes: 1. The minimum input voltage ( ) of the PAM3131 is determined by output voltage and dropout voltage. The minimum input voltage is defined as:
2. Output current is limited by P_D, maximum I_O = $P_D/(V_{IN(MAX)} - V_O)$.

NOT RECOMMENDED FOR NEW DESIGN

© Diodes Incorporated

Typical Performance Characteristics (@T_A = +25°C, C_{IN} =4.7µF, C_O = 2.2µF, unless otherwise specified.)

1. Output Voltage vs Input Voltage

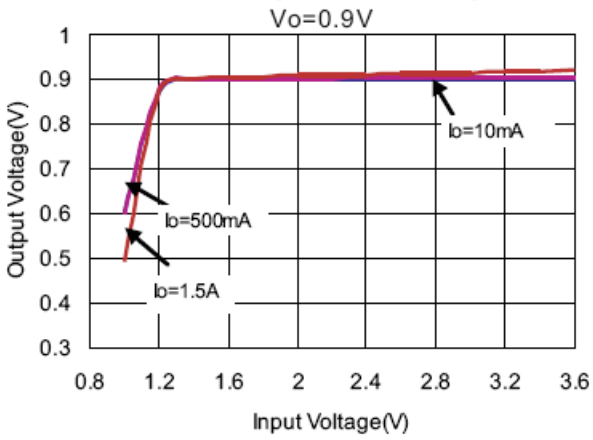

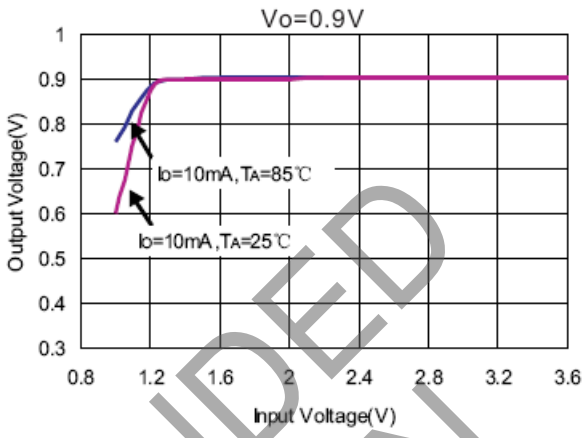

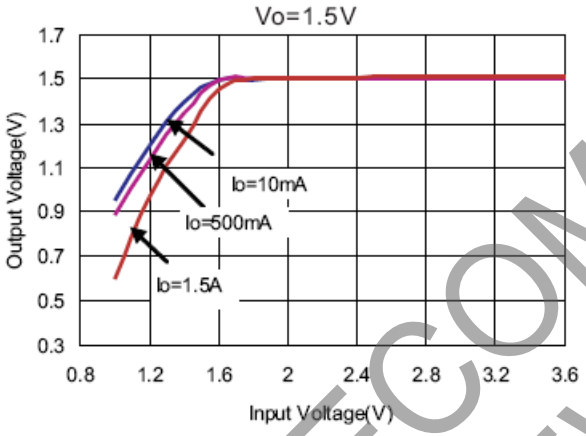

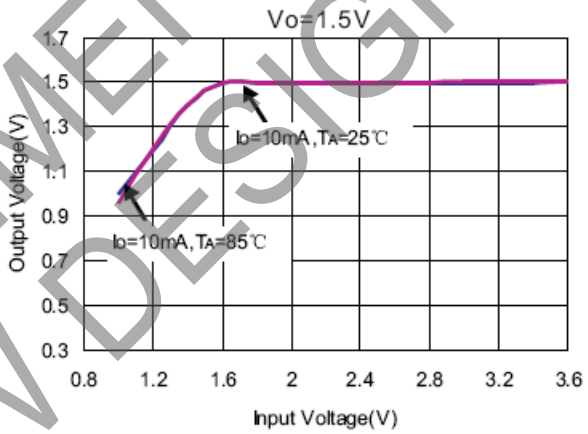

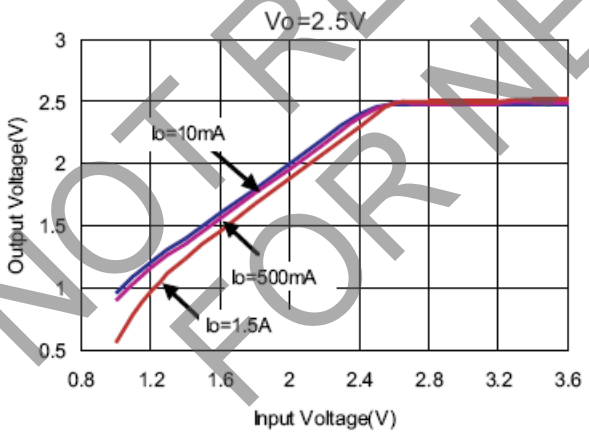

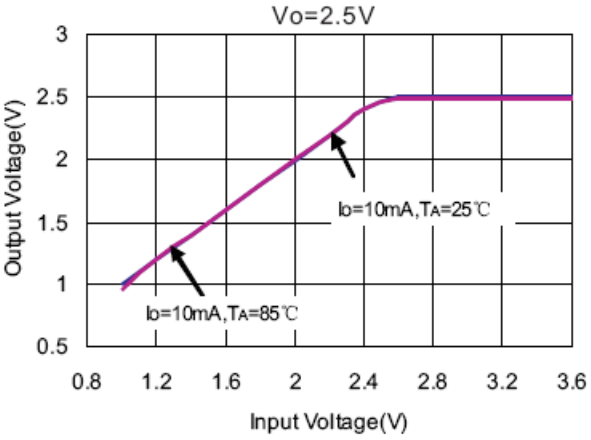

NOT RECOMMENDED FOR NEW DESIGN

© Diodes Incorporated

Typical Performance Characteristics (cont.) (@T_A = +25°C, C_{IN} =4.7µF, C_O = 2.2µF, unless otherwise specified.)

2. Output Voltage vs Output Current

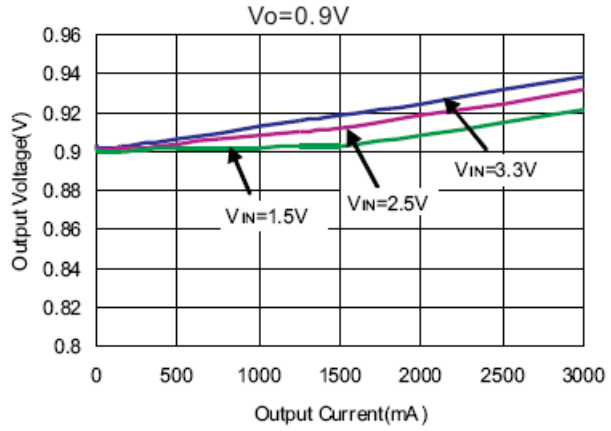

3. Output Voltage vs Temperature

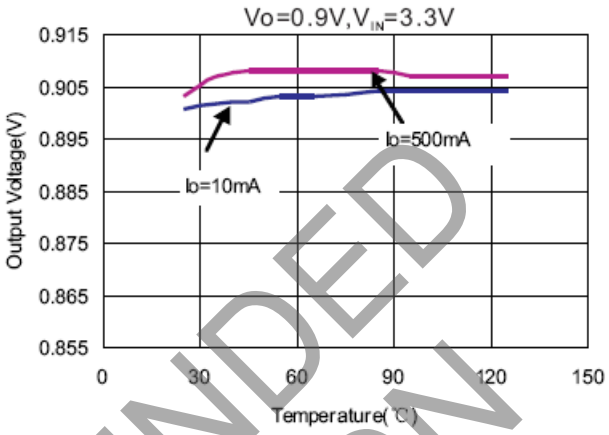

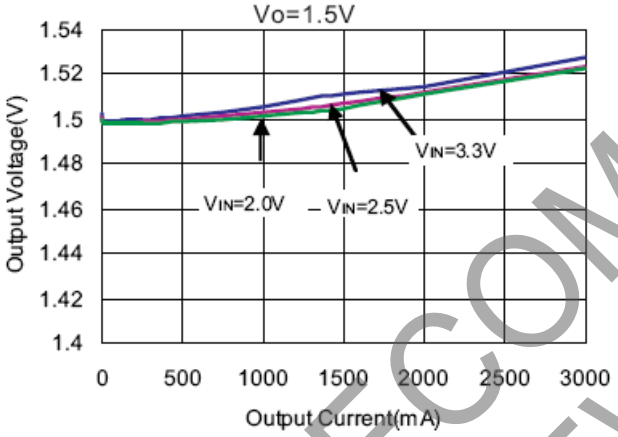

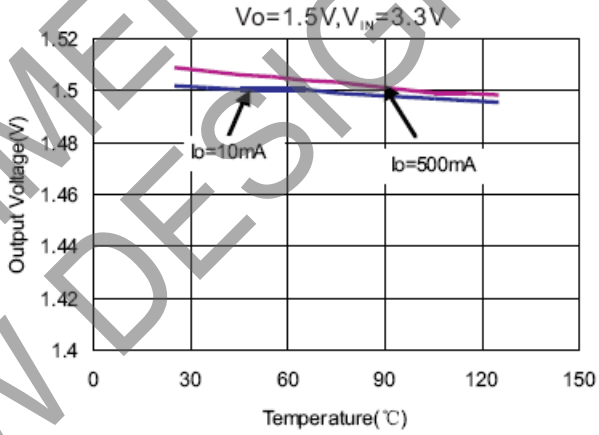

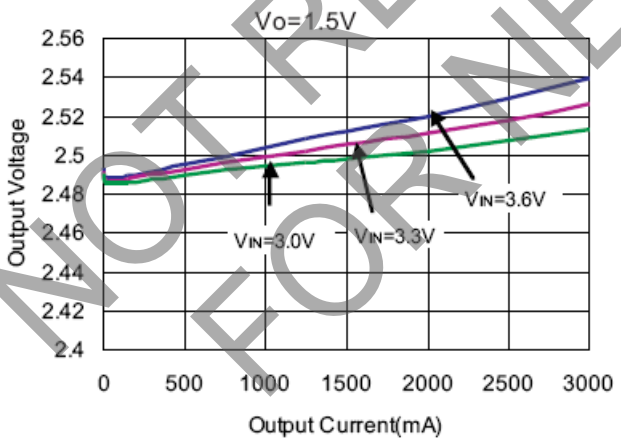

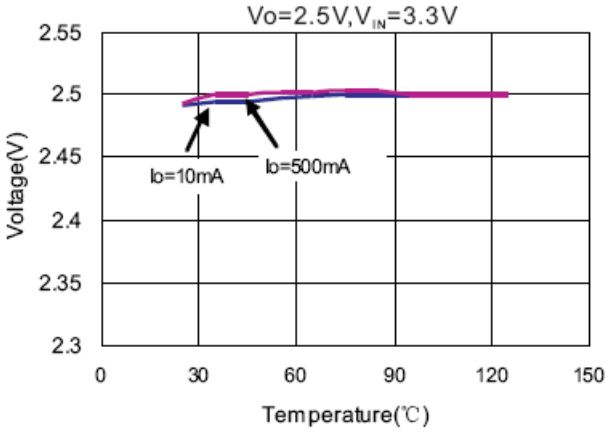

NOT RECOMMENDED FOR NEW DESIGN

© Diodes Incorporated

Typical Performance Characteristics (cont.) (@T_A = +25°C, C_{IN} =4.7µF, C_O = 2.2µF, unless otherwise specified.)

4. Quiescent Current vs Input Voltage

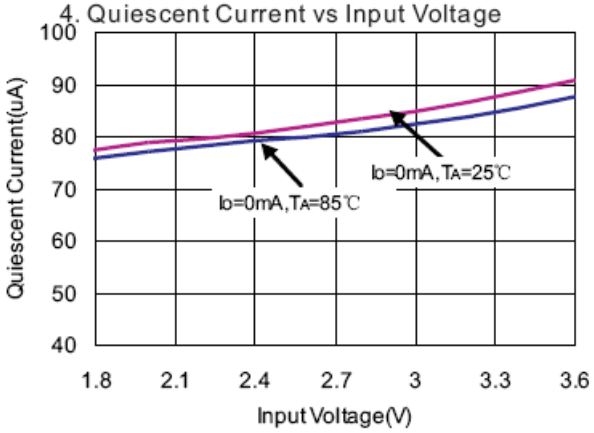

5. Ground Current vs Input Voltage

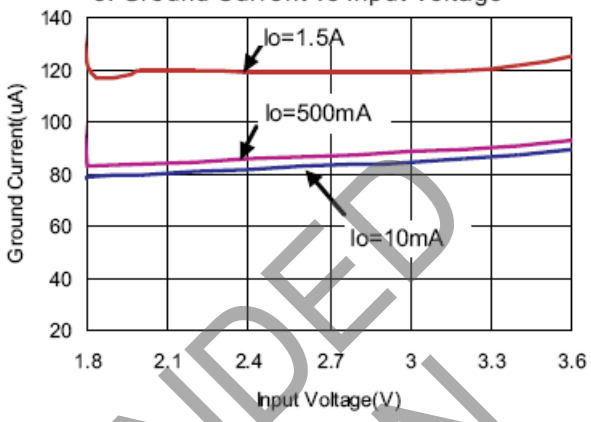

6. Ground Current vs Output Current

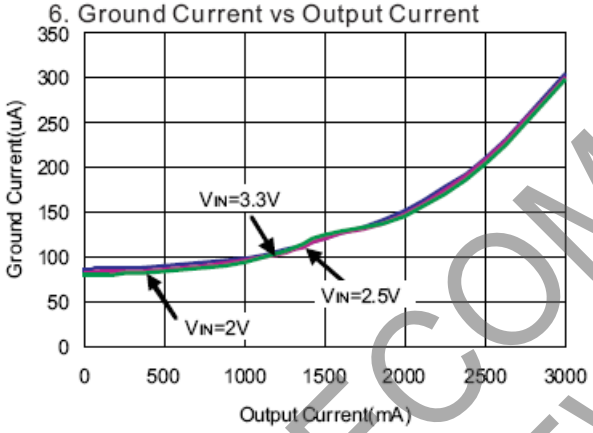

7. Ground Current vs Temperature

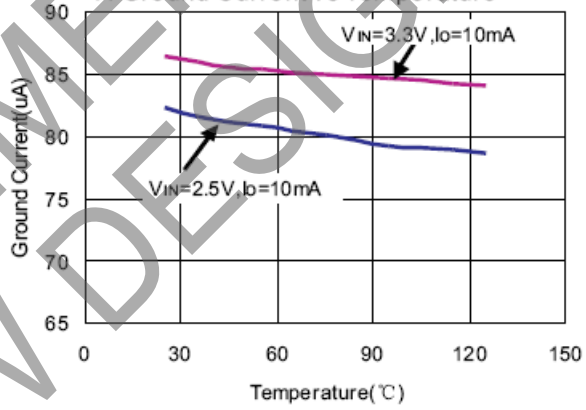

8. Dropout Voltage vs Output Current

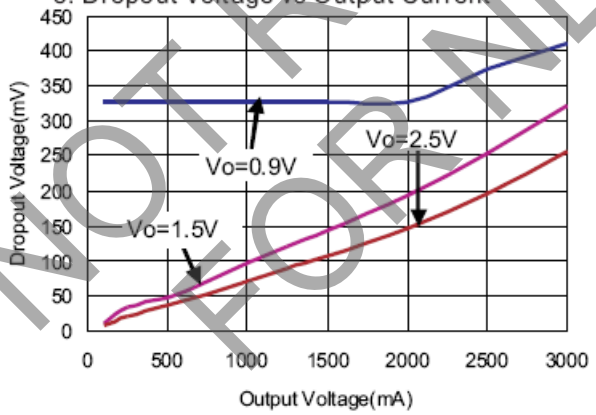

9. Dropout Voltage vs Temperature

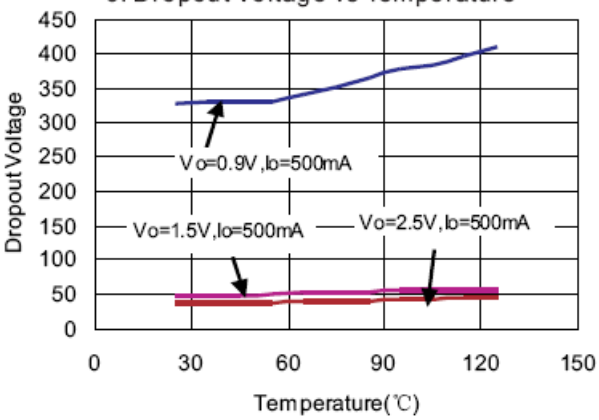

NOT RECOMMENDED FOR NEW DESIGN

© Diodes Incorporated

Typical Performance Characteristics (cont.) (@T_A = +25°C, C_{IN} =4.7µF, C_O = 2.2µF, unless otherwise specified.)

10. Ripple Rejection vs Frequency

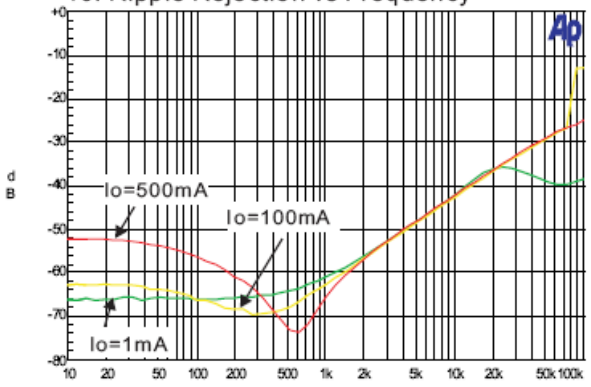

Vo=0.9V,V_{IN}=2.5V,Vpp=1V

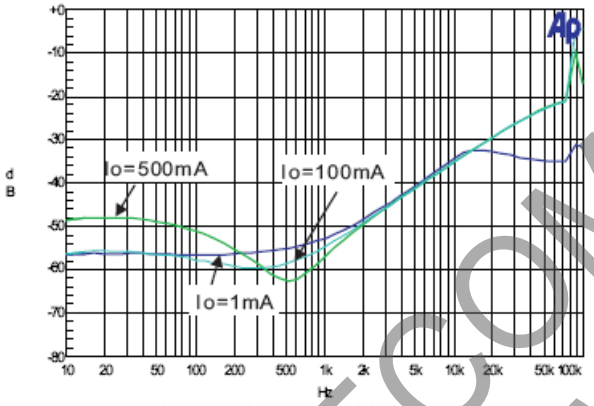

Vo=1.5V,V_{IN}=2.5V,Vpp=1V

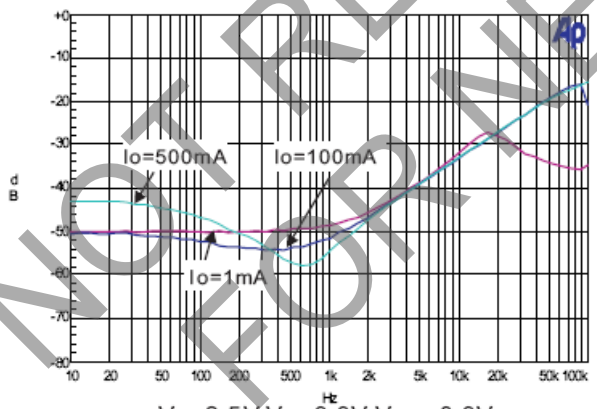

Vo=2.5V,V_{IN}=3.3V,Vpp=0.3V

11. Load Transient Response

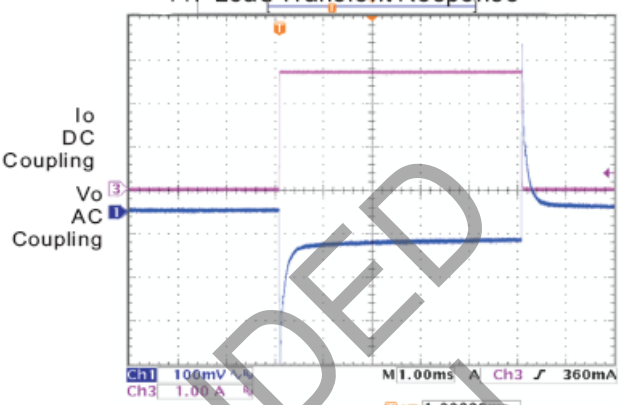

Vo=1.5V,V_{IN}=3.3V, Io=1mA to 3.0A

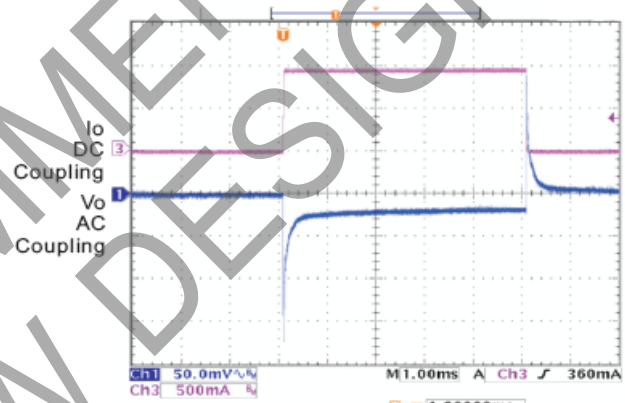

Vo=1.5V,V_{IN}=3.3V, Io=1mA to 1.0A

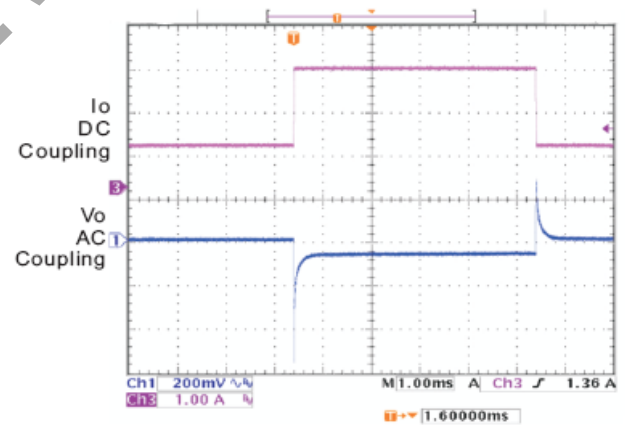

Vo=1.5V,V_{IN}=3.3V, Io=1A to 3.0A

NOT RECOMMENDED FOR NEW DESIGN

© Diodes Incorporated

Typical Performance Characteristics (cont.) (@T_A = +25°C, C_{IN} =4.7µF, C_O = 2.2µF, unless otherwise specified.)

12. Line Transient Response

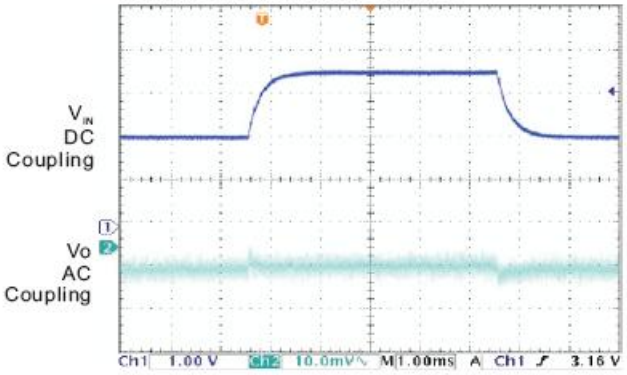

Vo=1.5V,Io=100mA, V_{IN}=2.0V to 3.3V

NOT RECOMMENDED FOR NEW DESIGN

© Diodes Incorporated

Application Information

The PAM3116 family of low-dropout (LDO) regulators have several features that allow them to apply to a wide range of applications. The family operates with very low input voltage and low dropout voltage (typically 300mV at full load), making it an efficient stand-alone power supply or post regulator for battery or switch mode power supplies. The 1.5A output current make the PAM3116 family suitable for powering many microprocessors and FPGA suppl ies. The PAM3116 family also has low output noise (typically 50μVRMS with 4.7μF output capacitor), making it ideal for use in telecom equipment.

External Capacitor Requirements

A 4.7μF or larger ceramic input bypass capacitor, connected between V_{IN} and GND and located close to the PAM3116, is required for stability. A 4.7μF minimum value capacitor from V_O to GND is also required. To improve transient response, noise rejection, and ripple rejection, an additional 1 0μF or larger, low ESR capacitor is recommended at the output. A higher-value, low ESR output capacitor may be necessary if large, fast-rise-time load transients are anticipated and the device is located several inches from the power source, especially if the minimum input voltage of 2.5V is used.

Regulator Protection

The PAM3116 features internal current limiting, thermal protection and short circuit protection. During normal operation, the PAM3116 limits output current to about 2.5A. When current limiting engages, the output voltage scales back linearly until the over current condition ends. While current limiting is designed to prevent gross device failure, care should be taken not to exceed the power dissipation ratings of the package. If the temperature of the device exceeds +150°C, thermal-protection circuitry will shut down. Once the device has cooled down to approximately +40°C below the high temp trip point, regulator operation resumes. The short circuit current of the PAM3116 is about 0.7A when its output pin is shorted to ground.

Thermal Information

The amount of heat that an LDO linear regulator generates is:

$$P_D = (V_{IN} - V_O)I_O$$

All integrated circuits have a maximum allowable junction temperature ($T_{J(MAX)}$) above which normal operation is not assured. A system designer must design the operating environment so that the operating junction temperature (T_J) does not exceed the maximum junction temperature ($T_{J(MAX)}$). The two main environmental variables that a designer can use to improve thermal performance are air flow and external heat sinks. The purpose of thi s information is to aid the designer in determining the proper operating environment for a linear regulator that is operating at a specific power level.

In general, the maximum expected power ($P_{D(MAX)}$) consumed by a linear regulator is computed as:

Where:

- $V_{I(AVG)}$ is the average input voltage.
- $V_{O(AVG)}$ is the average output voltage.
- $I_{O(AVG)}$ is the average output current.
- $I_{(Q)}$ is the quiescent current.

For most LDO regulators, the quiescent current is insignificant compared to the average output current; therefore, the term $V_{I(AVG)}$ xI_Q can be neglected. The operating junction temperature is computed by adding the ambient temperature (T_A) and the increase in temperature due to the regulator's power dissipation. The temperature rise is computed by multiplying the maximum expected power dissipation by the sum of the thermal resistances between the junction and the case ($R_{\theta JC}$), the case to heatsink ($R_{\theta CS}$), and the heatsink to ambient ($R_{\theta SA}$). Thermal resistances are measures of how effectively an object dissipates heat. Typically, the larger the device, the more surface area available for power dissipation so that the object's thermal resistance will be lowers.

NOT RECOMMENDED FOR NEW DESIGN

© Diodes Incorporated

Ordering Information

PAM3131 X X X X

Pin Configuration	Package Type	Number of Pins	Packaging
A Type: 1. VIN 2. EN 3. GND 4. ADJ 5. VOUT B Type: 1. GND 2. VIN 3. EN 4. GND 5. PWRGD 6. ADJ 7. VOUT 8. GND	M: TO-263 E: PSOP-8	B: 5 C: 8	R: Tape & Reel

Part Number	Package Type	Standard Package
PAM3131AMBR	TO236-5L	800 Units/Tape&Reel
PAM3131BECR	PSOP-8	2500 Units/Tape&Reel

Marking Information



P3131: PAM3131
X: Internal Code
Y: Year
W: Week



P3131: PAM3131
X: Internal Code
Y: Year
W: Week

NOT RECOMMENDED FOR NEW DESIGN

© Diodes Incorporated

Package Outline Dimensions (All dimensions in mm.)

TO263-5L

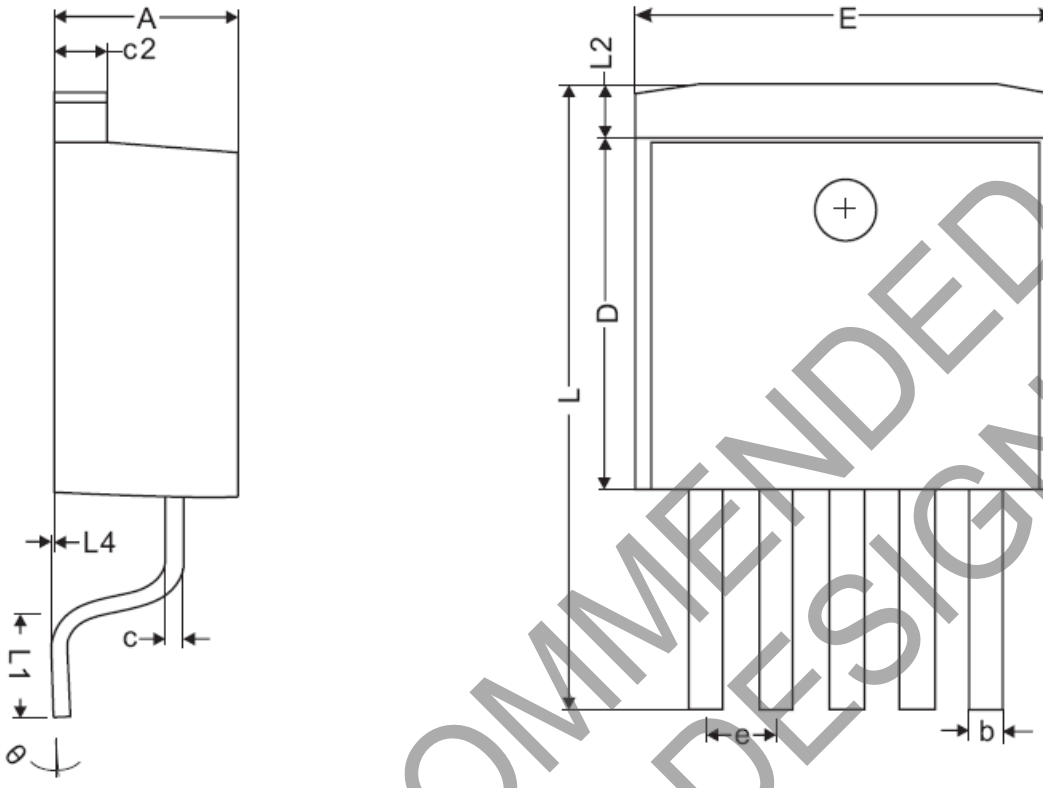

Dimensions(Millimeter)			
Symbol	MIN	NOM	MAX
A	4.40	4.60	4.80
b	0.66	0.78	0.91
L4	0.00	0.15	0.30
c	0.36	0.43	0.50
L3		1.50 REF.	
L1	2.29	2.54	2.79
E	9.80	10.1	10.4
c2	1.25	1.35	1.45
L2		1.27 REF.	
D	8.6	8.8	9.0
e		1.70 REF.	
L	14.6	15.2	15.8
θ	0°	4°	8°

NOT RECOMMENDED FOR NEW DESIGN

© Diodes Incorporated

Package Outline Dimensions (cont.) (All dimensions in mm.)

PSOP-8

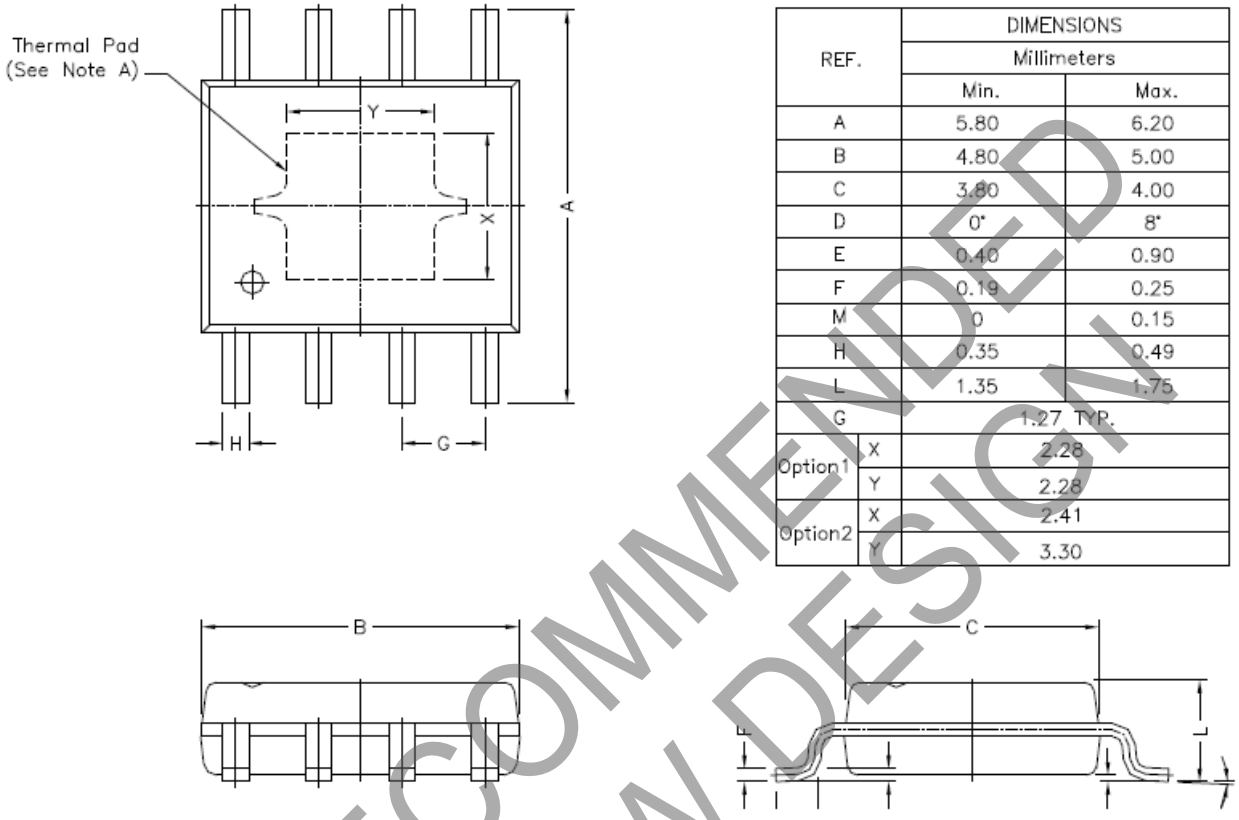

REF.		DIMENSIONS	
		Millimeters	
		Min.	Max.
A		5.80	6.20
B		4.80	5.00
C		3.80	4.00
D		0°	8°
E		0.40	0.90
F		0.19	0.25
M		0	0.15
H		0.35	0.49
L		1.35	1.75
G		1.27 TYP.	
Option1	X	2.28	
	Y	2.28	
Option2	X	2.41	
	Y	3.30	

NOT RECOMMENDED FOR NEW DESIGN

© Diodes Incorporated

IMPORTANT NOTICE

DIODES INCORPORATED MAKES NO WARRANTY OF ANY KIND, EXPRESS OR IMPLIED, WITH REGARDS TO THIS DOCUMENT, INCLUDING, BUT NOT LIMITED TO, THE IMPLIED WARRANTIES OF MERCHANTABILITY AND FITNESS FOR A PARTICULAR PURPOSE (AND THEIR EQUIVALENTS UNDER THE LAWS OF ANY JURISDICTION).

Diodes Incorporated and its subsidiaries reserve the right to make modifications, enhancements, improvements, corrections or other changes without further notice to this document and any product described herein. Diodes Incorporated does not assume any liability arising out of the application or use of this document or any product described herein; neither does Diodes Incorporated convey any license under its patent or trademark rights, nor the rights of others. Any Customer or user of this document or products described herein in such applications shall assume all risks of such use and will agree to hold Diodes Incorporated and all the companies whose products are represented on Diodes Incorporated website, harmless against all damages.

Diodes Incorporated does not warrant or accept any liability whatsoever in respect of any products purchased through unauthorized sales channel. Should Customers purchase or use Diodes Incorporated products for any unintended or unauthorized application, Customers shall indemnify and hold Diodes Incorporated and its representatives harmless against all claims, damages, expenses, and attorney fees arising out of, directly or indirectly, any claim of personal injury or death associated with such unintended or unauthorized application.

Products described herein may be covered by one or more United States, international or foreign patents pending. Product names and markings noted herein may also be covered by one or more United States, international or foreign trademarks.

This document is written in English but may be translated into multiple languages for reference. Only the English version of this document is the final and determinative format released by Diodes Incorporated.

LIFE SUPPORT

Diodes Incorporated products are specifically not authorized for use as critical components in life support devices or systems without the express written approval of the Chief Executive Officer of Diodes Incorporated. As used herein:

A. Life support devices or systems are devices or systems which:

1. are intended to implant into the body, or
2. support or sustain life and whose failure to perform when properly used in accordance with instructions for use provided in the labeling can be reasonably expected to result in significant injury to the user.

B. A critical component is any component in a life support device or system whose failure to perform can be reasonably expected to cause the failure of the life support device or to affect its safety or effectiveness.

Customers represent that they have all necessary expertise in the safety and regulatory ramifications of their life support devices or systems, and acknowledge and agree that they are solely responsible for all legal, regulatory and safety-related requirements concerning their products and any use of Diodes Incorporated products in such safety-critical, life support devices or systems, notwithstanding any devices- or systems-related information or support that may be provided by Diodes Incorporated. Further, Customers must fully indemnify Diodes Incorporated and its representatives against any damages arising out of the use of Diodes Incorporated products in such safety-critical, life support devices or systems.

Copyright © 2017, Diodes Incorporated

www.diodes.com

NOT RECOMMENDED FOR NEW DESIGN

ENTEGRECİ

Bu belge www.entegreci.com üzerinden sunulmaktadır.

Elektronik komponent tedarikinde Entegreci

Entegreci, Eskişehir merkezli, Türkiye geneline satış yapan bir elektronik komponent mağazasıdır. Entegreler (IC), mikrodenetleyiciler, transistörler, diyotlar, pasif elemanlar, konnektörler, modüller ve geliştirme kartları tek adetten seri üretim adetlerine kadar satılır. Ürün sayfalarında güncel stok durumunu, fiyatı ve datasheet bağlantısını bulabilirsiniz.

Parça koduyla arama

Üretici parça numarasını yazın; stok ve fiyatı hemen görün.

www.entegreci.com

Ürün kategorileri

Entegreden kapasitöre tüm elektronik komponent kategorileri.

Kategorilere göz atın

Üreticiler

Aradığınız üreticinin ürünlerini tek sayfada inceleyin.

Üreticileri görün

Toplu alım ve teklif

Listede olmayan ya da yüksek adetli parçalar için teklif isteyin.

Teklif isteyin

www.entegreci.com | **destek@entegreci.com** | **0850 305 90 34**

Entegreci is an online electronic components store based in Türkiye. Search by manufacturer part number to see stock, prices and datasheets for integrated circuits, microcontrollers, transistors, passive components and connectors, or request a quote for parts that are not listed.

Bu sayfa Entegreci tarafından eklenmiştir. Belgenin önceki sayfaları asıl yayıncısına aittir ve içeriği değiştirilmemiştir; en güncel sürüm için belgenin yayıncısına başvurun.