www.ablic.com

6.5 V INPUT, 300 mA VOLTAGE REGULATOR

© ABLIC Inc., 2004-2023

Rev.4.3_00

The S-1132 Series is a positive voltage regulator with a low dropout voltage, high-accuracy output voltage, and low current consumption (300 mA output current) developed based on CMOS technology.
A 0.1 μF small ceramic capacitor can be used. It operates with low current consumption of 20 μA typ. A built-in overcurrent protection circuit prevents the output current from exceeding the current capacity of the output transistor.
Compared with the conventional 300 mA output current CMOS voltage regulators, high-density mounting is realized by using the super-small SNT-6A(H) package and a 0.1μF small ceramic capacitor.
Also, the low current consumption makes the S-1132 Series ideal for mobile devices.

■ Features

- Output voltage: 1.5 V to 5.5 V, selectable in 0.1 V step
- Input voltage: 2.0 V to 6.5 V
- Output voltage accuracy: ±1.0%
- Dropout voltage: 130 mV typ. (3.0 V output product, I_{OUT} = 100 mA)
- Current consumption: During operation: 20 μA typ., 40 μA max.
  During power-off: 0.01 μA typ., 1.0 μA max.
- Output current: Possible to output 300 mA ($V_{IN} \geq V_{OUT(S)} + 1.0$ V)*1
- Input and output capacitors: A ceramic capacitor of 0.1 μF or more can be used.
- Ripple rejection: 70 dB typ. (f = 1.0 kHz)
- Built-in overcurrent protection circuit: Limits overcurrent of output transistor.
- Built-in ON/OFF circuit: Ensures long battery life.
- Operation temperature range: Ta = –40°C to +85°C
- Lead-free, Sn 100%, halogen-free*2

***1.** Attention should be paid to the power dissipation of the package when the output current is large.
***2.** Refer to "■ **Product Name Structure**" for details.

■ Applications

- Power supply for battery-powered device
- Power supply for personal communication device
- Power supply for home electric appliance
- Power supply for cellular phone

■ Packages

- SOT-23-5
- SOT-89-5
- SNT-6A(H)

■ Block Diagram

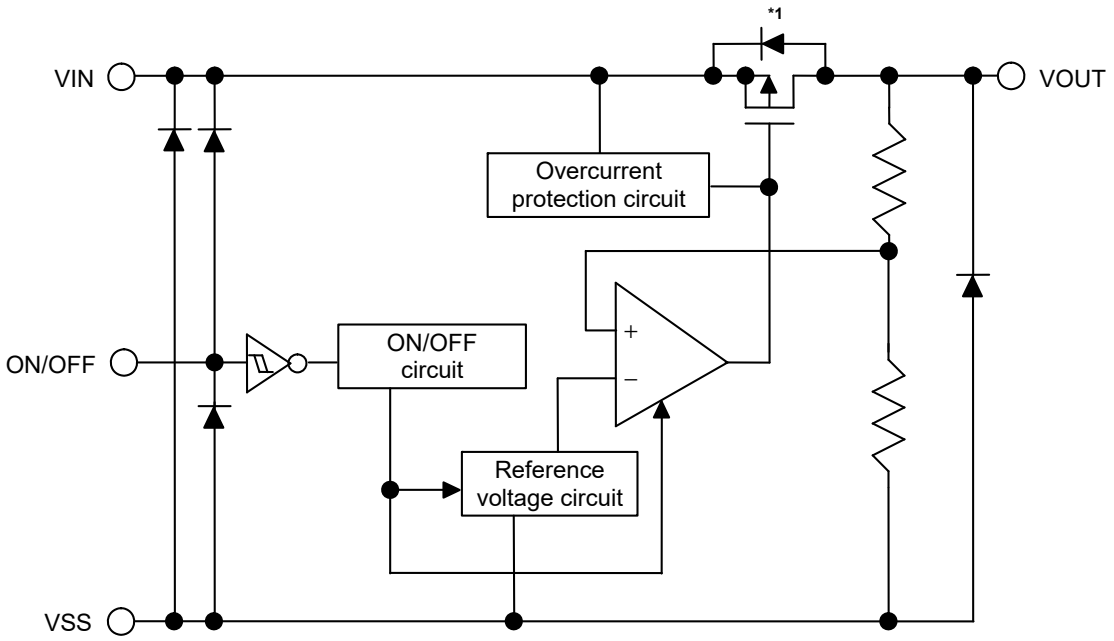

***1.** Parasitic diode

Figure 1

■ Product Name Structure

Users can select the product type, output voltage, and package type for the S-1132 Series. Refer to "**1. Product name**" regarding the contents of product name "**2. Packages**" regarding the package drawings "**3. Product name list**" regarding details of the product name.

1. Product name

1. 1 SOT-23-5, SOT-89-5

S-1132 x xx - xxxx x

- Environmental code
  - U: Lead-free (Sn 100%), halogen-free
  - G: Lead-free (for details, please contact our sales representatives)
- Package abbreviation and IC packing specifications*1
  - M5T1: SOT-23-5, Tape
  - U5T1: SOT-89-5, Tape
- Output voltage
  - 15 to 55
  - (e.g., when the output voltage is 1.5 V, it is expressed as 15.)
- Product type*2
  - A: ON/OFF pin negative logic
  - B: ON/OFF pin positive logic

***1.** Refer to the tape drawing.
***2.** Refer to "**3. ON/OFF pin**" in "**■ Operation**".

1. 2 SNT-6A(H)

S-1132 x xx - I6T2 U

- Environmental code
  - U: Lead-free (Sn 100%), halogen-free
- Package abbreviation and IC packing specifications*1
  - I6T2: SNT-6A(H), Tape
- Output voltage
  - 15 to 55
  - (e.g., when the output voltage is 1.5 V, it is expressed as 15.)
- Product type*2
  - A: ON/OFF pin negative logic
  - B: ON/OFF pin positive logic

***1.** Refer to the tape drawing.
***2.** Refer to "**3. ON/OFF pin**" in "**■ Operation**".

2. Packages

Package Name	Drawing Code			
	Package	Tape	Reel	Land
SOT-23-5	MP005-A-P-SD	MP005-A-C-SD	MP005-A-R-SD	—
SOT-89-5	UP005-A-P-SD	UP005-A-C-SD	UP005-A-R-SD	—
SNT-6A(H)	PI006-A-P-SD	PI006-A-C-SD	PI006-A-R-SD	PI006-A-L-SD

3. Product name list

Table 1

Output Voltage	SOT-23-5	SOT-89-5	SNT-6A(H)
1.8 V ± 1.0%	S-1132B18-M5T1x	S-1132B18-U5T1x	S-1132B18-I6T2U
2.5 V ± 1.0%	S-1132B25-M5T1x	S-1132B25-U5T1x	S-1132B25-I6T2U
3.3 V ± 1.0%	S-1132B33-M5T1x	S-1132B33-U5T1x	S-1132B33-I6T2U

Remark 1. Please contact our sales representatives for products other than the above.
2. x: G or U
3. Please select products of environmental code = U for Sn 100%, halogen-free products.

■ Pin Configurations

SOT-23-5
Top view

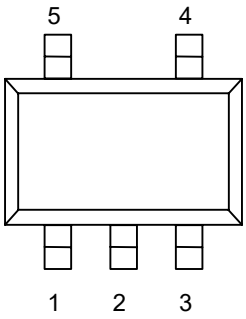

Figure 2

Table 2

Pin No.	Symbol	Description
1	VIN	Input voltage pin
2	VSS	GND pin
3	ON/OFF	ON/OFF pin
4	NC*1	No connection
5	VOUT	Output voltage pin

***1.** The NC pin is electrically open.
The NC pin can be connected to VIN or VSS.

SOT-89-5
Top view

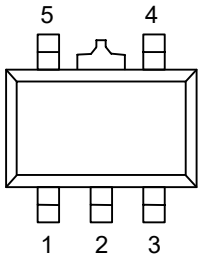

Figure 3

Table 3

Pin No.	Symbol	Description
1	VOUT	Output voltage pin
2	VSS	GND pin
3	NC*1	No connection
4	ON/OFF	ON/OFF pin
5	VIN	Input voltage pin

***1.** The NC pin is electrically open.
The NC pin can be connected to VIN or VSS.

SNT-6A(H)
Top view

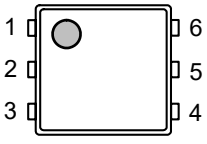

Figure 4

Table 4

Pin No.	Symbol	Description
1	VOUT	Output voltage pin
2	VSS	GND pin
3	NC*1	No connection
4	ON/OFF	ON/OFF pin
5	VSS	GND pin
6	VIN	Input voltage pin

***1.** The NC pin is electrically open.
The NC pin can be connected to VIN or VSS.

■ Absolute Maximum Ratings

Table 5

(Ta = 25°C unless otherwise specified)

Item		Symbol	Absolute Maximum Rating	Unit
Input voltage		V_{IN}	V_{SS} – 0.3 to V_{SS} + 7	V
		$V_{ON/OFF}$	V_{SS} – 0.3 to V_{IN} + 0.3	V
Output voltage		V_{OUT}	V_{SS} – 0.3 to V_{IN} + 0.3	V
Power dissipation	SOT-23-5	P_D	300 (When not mounted on board)	mW
			600*1	mW
	SOT-89-5		500 (When not mounted on board)	mW
			1000*1	mW
	SNT-6A(H)		500*1	mW
Operation ambient temperature		T_{opr}	–40 to +85	°C
Storage temperature		T_{stg}	–40 to +125	°C

***1.** When mounted on board
[Mounted Board]
(1) Board size: 114.3 mm × 76.2 mm × t1.6 mm
(2) Board name: JEDEC STANDARD51-7

Caution The absolute maximum ratings are rated values exceeding which the product could suffer physical damage. These values must therefore not be exceeded under any conditions.

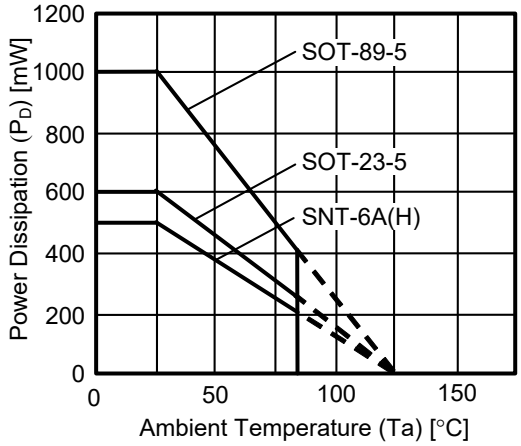

Figure 5 Power Dissipation of Package (When Mounted on Board)

■ Electrical Characteristics

Table 6

(Ta = 25°C unless otherwise specified)

Item	Symbol	Condition		Min.	Typ.	Max.	Unit	Test Circuit
Output voltage*1	$V_{OUT(E)}$	$V_{IN} = V_{OUT(S)} + 1.0$ V, $I_{OUT} = 100$ mA		$V_{OUT(S)} \times 0.99$	$V_{OUT(S)}$	$V_{OUT(S)} \times 1.01$	V	1
Output current*2	I_{OUT}	$V_{IN} \geq V_{OUT(S)} + 1.0$ V		300*5	—	—	mA	3
Dropout voltage*3	V_{drop}	$I_{OUT} = 100$ mA	1.5 V ≤ $V_{OUT(S)}$ ≤ 1.9 V	0.50	0.54	0.58	V	1
			2.0 V ≤ $V_{OUT(S)}$ ≤ 2.4 V	—	0.15	0.23	V	1
			2.5 V ≤ $V_{OUT(S)}$ ≤ 2.9 V	—	0.14	0.21	V	1
			3.0 V ≤ $V_{OUT(S)}$ ≤ 3.2 V	—	0.13	0.19	V	1
			3.3 V ≤ $V_{OUT(S)}$ ≤ 5.5 V	—	0.10	0.15	V	1
Line regulation	$\frac{\Delta V_{OUT1}}{\Delta V_{IN} \bullet V_{OUT}}$	$V_{OUT(S)} + 0.5$ V ≤ V_{IN} ≤ 6.5 V, $I_{OUT} = 100$ mA		—	0.01	0.2	% / V	1
Load regulation	ΔV_{OUT2}	$V_{IN} = V_{OUT(S)} + 1.0$ V, 1.0 mA ≤ I_{OUT} ≤ 100 mA		—	15	40	mV	1
Output voltage temperature coefficient*4	$\frac{\Delta V_{OUT}}{\Delta Ta \bullet V_{OUT}}$	$V_{IN} = V_{OUT(S)} + 1.0$ V, $I_{OUT} = 30$ mA, –40°C ≤ Ta ≤ 85°C		—	±100	—	ppm/°C	1
Current consumption during operation	I_{SS1}	$V_{IN} = V_{OUT(S)} + 1.0$ V, ON/OFF pin = ON, no load		—	20	40	μA	2
Current consumption during power-off	I_{SS2}	$V_{IN} = V_{OUT(S)} + 1.0$ V, ON/OFF pin = OFF, no load		—	0.01	1.0	μA	2
Input voltage	V_{IN}	—		2.0	—	6.5	V	—
ON/OFF pin input voltage "H"	V_{SH}	$V_{IN} = V_{OUT(S)} + 1.0$ V, $R_L = 1.0$ kΩ		1.5	—	—	V	4
ON/OFF pin input voltage "L"	V_{SL}	$V_{IN} = V_{OUT(S)} + 1.0$ V, $R_L = 1.0$ kΩ		—	—	0.25	V	4
ON/OFF pin input current "H"	I_{SH}	$V_{IN} = 6.5$ V, $V_{ON/OFF} = 6.5$ V		–0.1	—	0.1	μA	4
ON/OFF pin input current "L"	I_{SL}	$V_{IN} = 6.5$ V, $V_{ON/OFF} = 0$ V		–0.1	—	0.1	μA	4
Ripple rejection	$\lvert RR \rvert$	$V_{IN} = V_{OUT(S)} + 1.0$ V, f = 1.0 kHz, $\Delta V_{rip} = 0.5$ Vrms, $I_{OUT} = 50$ mA	1.5 V ≤ $V_{OUT(S)}$ ≤ 3.0 V	—	70	—	dB	5
			3.1 V ≤ $V_{OUT(S)}$ ≤ 5.5 V	—	65	—	dB	5
Short-circuit current	I_{short}	$V_{IN} = V_{OUT(S)} + 1.0$ V, ON/OFF pin = ON, $V_{OUT} = 0$ V		—	250	—	mA	3

***1.** $V_{OUT(S)}$: Set output voltage
$V_{OUT(E)}$: Actual output voltage
The output voltage when fixing I_{OUT}(= 100 mA) and inputting $V_{OUT(S)}$ + 1.0 V

***2.** The output current at which the output voltage becomes 95% of $V_{OUT(E)}$ after gradually increasing the output current.

***3.** $V_{drop} = V_{IN1} - (V_{OUT3} \times 0.98)$
V_{OUT3} is the output voltage when $V_{IN} = V_{OUT(S)}$ + 1.0 V and I_{OUT} = 100 mA.
V_{IN1} is the input voltage at which the output voltage becomes 98% of V_{OUT3} after gradually decreasing the input voltage.

***4.** A change in the temperature of the output voltage [mV/°C] is calculated using the following equation.

$$\frac{\Delta V_{OUT}}{\Delta Ta}\ [mV/°C]^{*1} = V_{OUT(S)}\ [V]^{*2} \times \frac{\Delta V_{OUT}}{\Delta Ta \bullet V_{OUT}}\ [ppm/°C]^{*3} \div 1000$$

***1.** Change in temperature of output voltage
***2.** Set output voltage
***3.** Output voltage temperature coefficient

***5.** The output current can be at least this value.
Due to restrictions on the package power dissipation, this value may not be satisfied. Attention should be paid to the power dissipation of the package when the output current is large.
This specification is guaranteed by design.

■ Test Circuits

1.

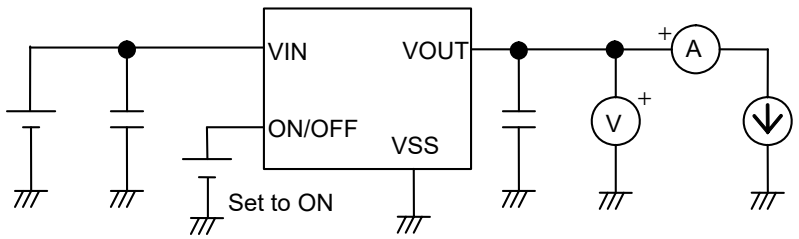

Figure 6

2.

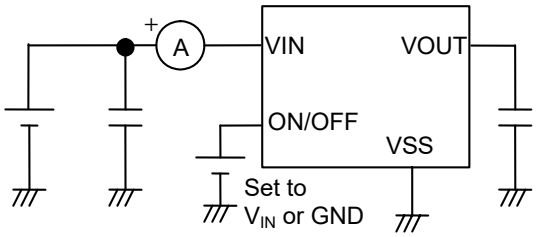

Figure 7

3.

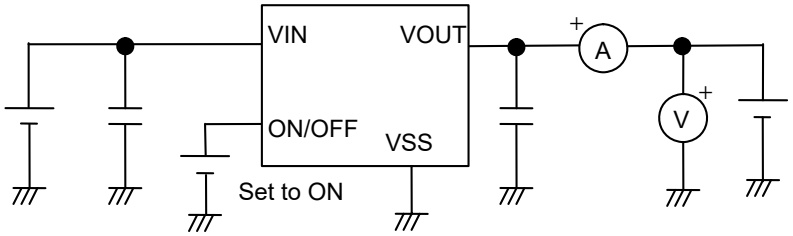

Figure 8

4.

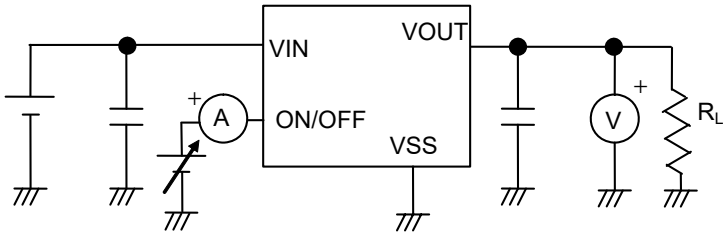

Figure 9

5.

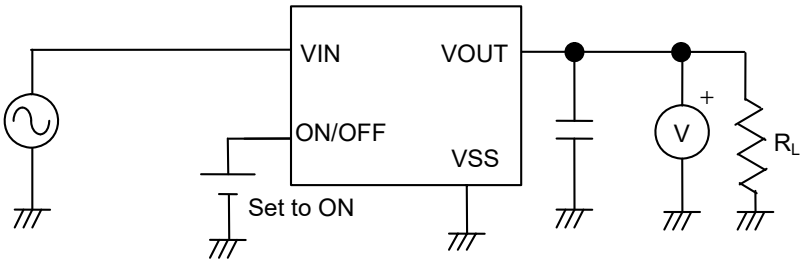

Figure 10

■ Standard Circuit

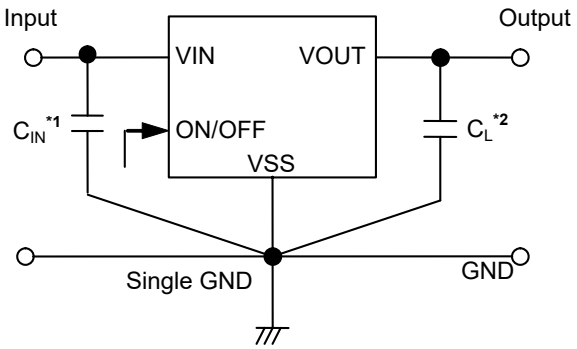

***1.** C_{IN} is a capacitor for stabilizing the input.
***2.** A ceramic capacitor of 0.1 μF or more can be used as C_L.

Figure 11

Caution The above connection diagram and constant will not guarantee successful operation. Perform thorough evaluation using the actual application to set the constant.

■ Condition of Application

Input capacitor (C_{IN}):	0.1 μF or more
Output capacitor (C_L):	0.1 μF or more
ESR of output capacitor:	2.0 Ω or less

Caution Generally a series regulator may cause oscillation, depending on the selection of external parts. Confirm that no oscillation occurs in the application for which the above capacitors are used.

■ Selection of Input and Output Capacitors (C_{IN}, C_L)

The S-1132 Series requires an output capacitor between the VOUT and VSS pins for phase compensation. Operation is stabilized by a ceramic capacitor with an output capacitance of 0.1 μF or more in the entire temperature range. However, when using an OS capacitor, a tantalum capacitor, or an aluminum electrolytic capacitor, the capacitance must be 0.1 μF or more, and the ESR must be 2.0 Ω or less.
The value of the output overshoot or undershoot transient response varies depending on the value of the output capacitor. The required capacitance of the input capacitor differs depending on the application.
The recommended value for an application is 0.1 μF or more for C_{IN} and 0.1 μF or more for C_L; however, when selecting the output capacitor, perform sufficient evaluation, including evaluation of temperature characteristics, on the actual device.

■ Explanation of Terms

1. Low dropout voltage regulator

This voltage regulator has the low dropout voltage due to its built-in low on-resistance transistor.

2. Low ESR

A capacitor whose ESR (Equivalent Series Resistance) is low. The S-1132 Series enables use of a low ESR capacitor, such as a ceramic capacitor, for the output capacitor (C_L). A capacitor whose ESR is 2.0 Ω or less can be used.

3. Output voltage (V_{OUT})

The accuracy of the output voltage is ensured at ±1.0% under the specified conditions of fixed input voltage[*1], fixed output current, and fixed temperature.

***1.** Differs depending on the product.

Caution If the above conditions change, the output voltage value may vary and exceed the accuracy range of the output voltage. Refer to "■ Electrical Characteristics" and "■ Characteristics (Typical Data)" for details.

4. Line regulation $\left(\frac{\Delta V_{OUT1}}{\Delta V_{IN} \bullet V_{OUT}}\right)$

Indicates the dependency of the output voltage on the input voltage. That is, the values show how much the output voltage changes due to a change in the input voltage with the output current remaining unchanged.

5. Load regulation (ΔV_{OUT2})

Indicates the dependency of the output voltage on the output current. That is, the values show how much the output voltage changes due to a change in the output current with the input voltage remaining unchanged.

6. Dropout voltage (V_{drop})

Indicates the difference between input voltage (V_{IN1}) and the output voltage when; decreasing input voltage (V_{IN}) gradually until the output voltage has dropped out to the value of 98% of output voltage (V_{OUT3}), which is at V_{IN} = $V_{OUT(S)}$ + 1.0 V.

$V_{drop} = V_{IN1} - (V_{OUT3} \times 0.98)$

7. Output voltage temperature coefficient $\left(\frac{\Delta V_{OUT}}{\Delta Ta \bullet V_{OUT}}\right)$

The shaded area in **Figure 12** is the range where V_{OUT} varies in the operation temperature range when the output voltage temperature coefficient is ±100 ppm/°C.

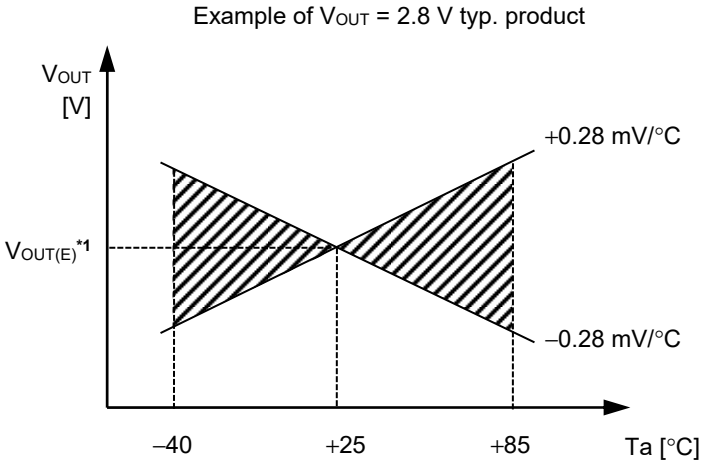

***1.** $V_{OUT(E)}$ is the value of the output voltage measured at Ta = +25°C.

Figure 12

A change in the temperature of the output voltage [mV/°C] is calculated using the following equation.

$$\frac{\Delta V_{OUT}}{\Delta Ta}\ [mV/°C]^{*1} = V_{OUT(S)}\ [V]^{*2} \times \frac{\Delta V_{OUT}}{\Delta Ta \bullet V_{OUT}}\ [ppm/°C]^{*3} \div 1000$$

***1.** Change in temperature of output voltage
***2.** Set output voltage
***3.** Output voltage temperature coefficient

■ Operation

1. Basic operation

Figure 13 shows the block diagram of the S-1132 Series.
The error amplifier compares the reference voltage (V_{ref}) with feedback voltage (V_{fb}), which is the output voltage resistance-divided by feedback resistors (R_s and R_f). It supplies the gate voltage necessary to maintain the constant output voltage which is not influenced by the input voltage and temperature change, to the output transistor.

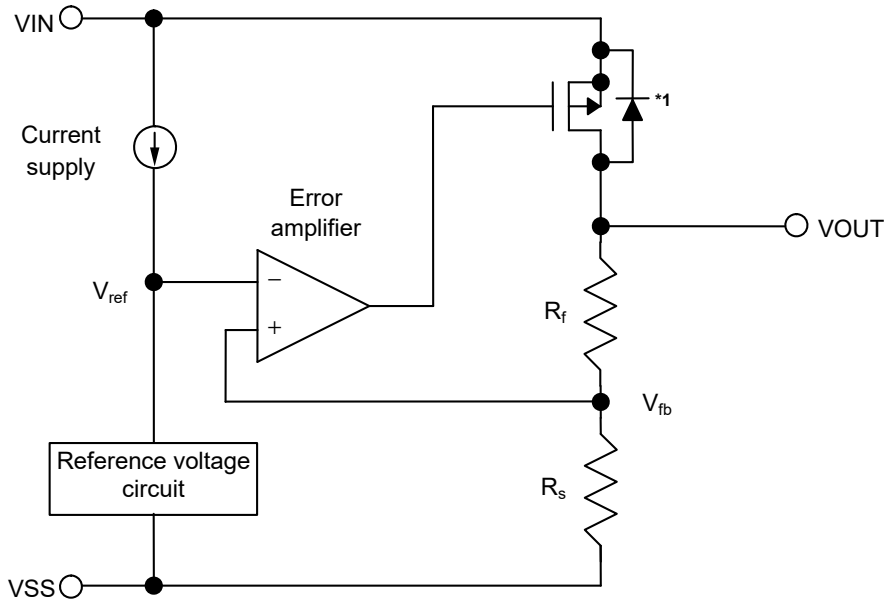

***1**. Parasitic diode

Figure 13

2. Output transistor

In the S-1132 Series, a low on-resistance P-channel MOS FET is used as the output transistor.
Be sure that V_{OUT} does not exceed V_{IN} + 0.3 V to prevent the voltage regulator from being damaged due to reverse current flowing from the VOUT pin through a parasitic diode to the VIN pin, when the potential of V_{OUT} became higher than V_{IN}.

3. ON/OFF pin

This pin starts and stops the regulator.

When the ON/OFF pin is set to OFF level, the entire internal circuit stops operating, and the built-in P-channel MOS FET output transistor between the VIN pin and the VOUT pin is turned off, reducing current consumption significantly. The VOUT pin becomes the V_{SS} level due to the internally divided resistance of several hundreds kΩ between the VOUT pin and VSS pin.
The structure of the ON/OFF pin is as shown in **Figure 14**. Since the ON/OFF pin is neither pulled down nor pulled up internally, do not use it in the floating status. In addition, note that the current consumption increases if a voltage of 0.3 V to V_{IN} – 0.3 V is applied to the ON/OFF pin. When the ON/OFF pin is not used, connect it to the VSS pin if the product type is “A” and to the VIN pin if it is “B”.

Table 7

Product Type	ON/OFF Pin	Internal Circuit	VOUT Pin Voltage	Current Consumption
A	“L”: ON	Operate	Set value	I_{SS1}
A	“H”: OFF	Stop	V_{SS} level	I_{SS2}
B	“L”: OFF	Stop	V_{SS} level	I_{SS2}
B	“H”: ON	Operate	Set value	I_{SS1}

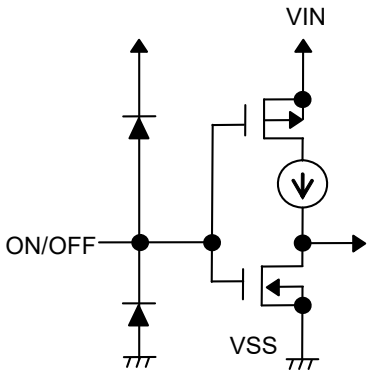

Figure 14

■ Precautions

- Wiring patterns for the VIN, VOUT pins and GND should be designed so that the impedance is low. When mounting an output capacitor between the VOUT and VSS pins (C_L) and a capacitor for stabilizing the input between VIN and VSS pins (C_{IN}), the distance from the capacitors to these pins should be as short as possible.
- Note that generally the output voltage may increase when a series regulator is used at low load current (1.0 mA or less).
- Note that generally the output voltage may increase due to the leakage current from an output driver when a series regulator is used at high temperature.
- Generally a series regulator may cause oscillation, depending on the selection of external parts. The following conditions are recommended for the S-1132 Series. However, be sure to perform sufficient evaluation under the actual usage conditions for selection, including evaluation of temperature characteristics.

Input capacitor (C_{IN}):	0.1 μF or more
Output capacitor (C_L):	0.1 μF or more
Equivalent series resistance (ESR):	2.0 Ω or less

- The voltage regulator may oscillate when the impedance of the power supply is high and the input capacitance is small or an input capacitor is not connected.
- If the output capacitance is small, power supply's fluctuation and the characteristics of load fluctuation become worse. Sufficiently evaluate the output voltage's fluctuation with the actual device.
- Overshoot may occur in the output voltage momentarily if the voltage is rapidly raised at power-on or when the power supply fluctuates. Sufficiently evaluate the output voltage at power-on with the actual device.
- The application conditions for the input voltage, the output voltage, and the load current should not exceed the package power dissipation.
- Do not apply an electrostatic discharge to this IC that exceeds the performance ratings of the built-in electrostatic protection circuit.
- In determining the output current, attention should be paid to the output current value specified in **Table 6** in "■ **Electrical Characteristics**" and footnote ***5** of the table.
- ABLIC Inc. claims no responsibility for any disputes arising out of or in connection with any infringement by products including this IC of patents owned by a third party.

■ Characteristics (Typical Data)

1. Output Voltage vs. Output Current (When Load Current Increases) (Ta = 25°C)

1. 1 V_{OUT} = 1.5 V

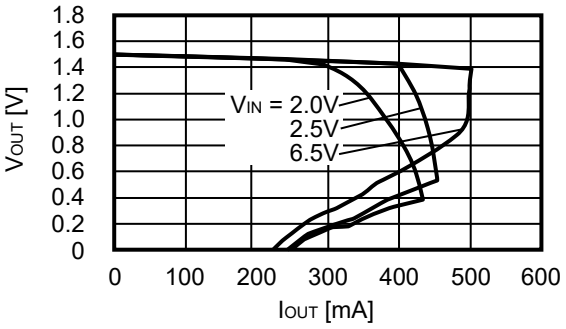

1. 2 V_{OUT} = 3.0 V

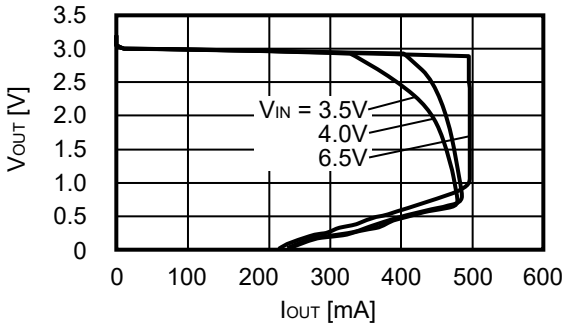

1. 3 V_{OUT} = 5.0 V

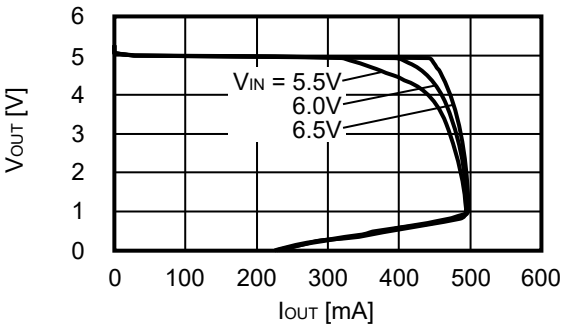

Remark In determining the output current, attention should be paid to the following.
1. The minimum output current value and footnote ***5** of **Table 6** in "■ **Electrical Characteristics**"
2. The package power dissipation

2. Output Voltage vs. Input Voltage (Ta = 25°C)

2. 1 V_{OUT} = 1.5 V

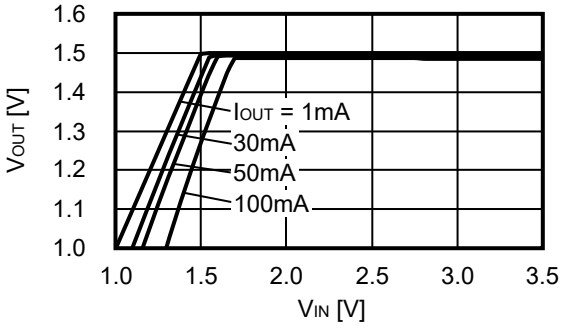

2. 2 V_{OUT} = 3.0 V

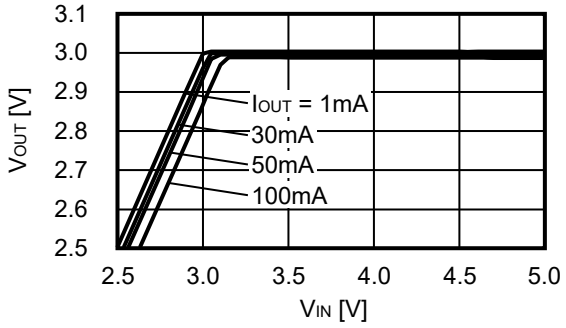

2. 3 V_{OUT} = 5.0 V

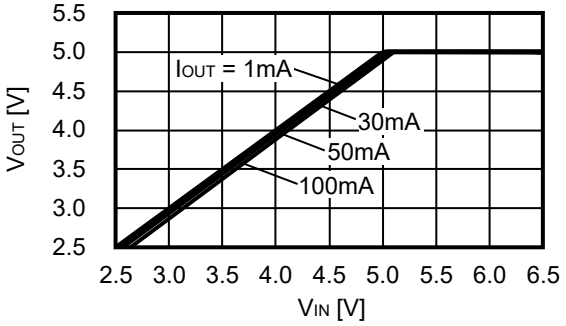

3. Dropout Voltage vs. Output Current

3. 1 V_{OUT} = 1.5 V

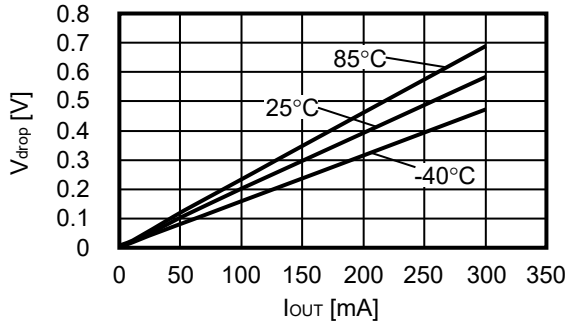

3. 2 V_{OUT} = 3.0 V

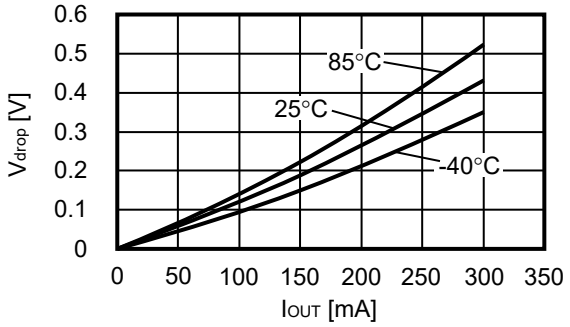

3. 3 V_{OUT} = 5.0 V

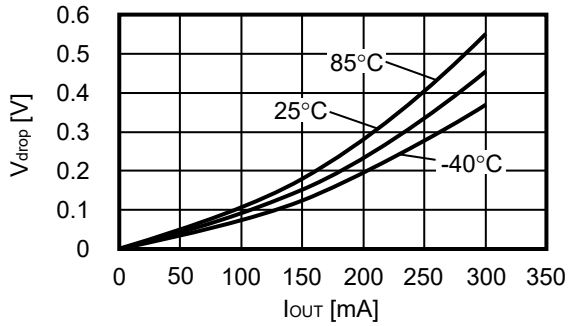

4. Dropout Voltage vs. Set Output Voltage

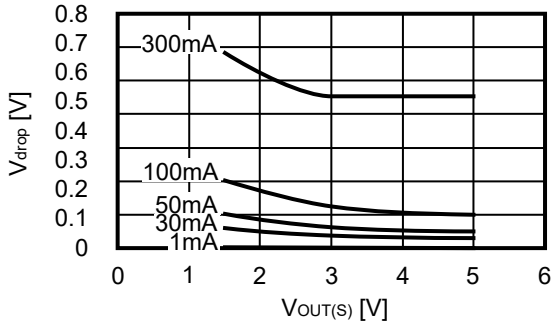

5. Output Voltage vs. Ambient Temperature

5. 1 V_{OUT} = 1.5 V

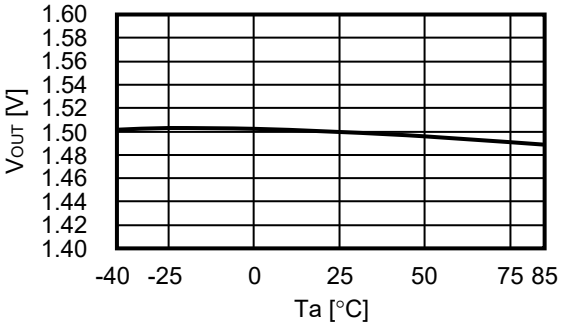

5. 2 V_{OUT} = 3.0 V

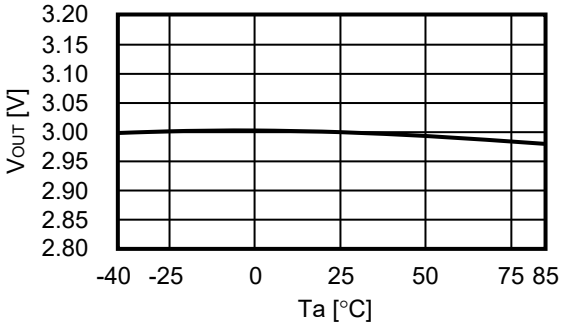

5. 3 V_{OUT} = 5.0 V

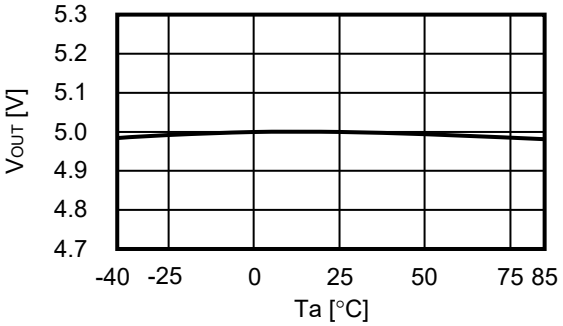

6. Current Consumption vs. Input Voltage

6. 1 V_{OUT} = 1.5 V

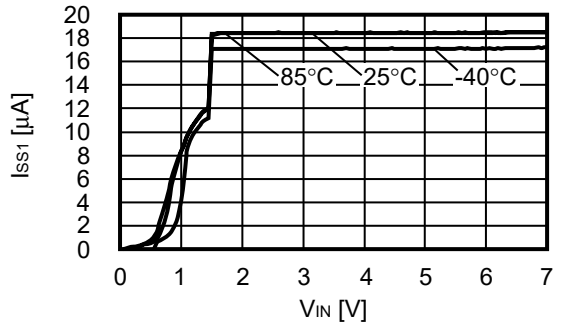

6. 2 V_{OUT} = 3.0 V

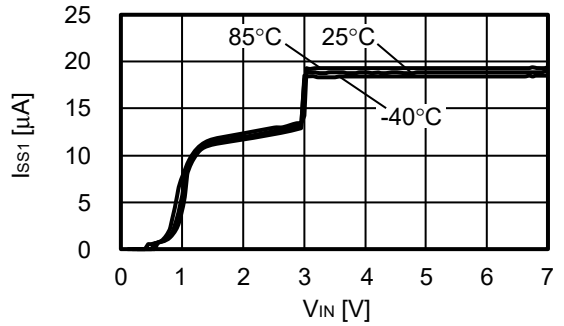

6. 3 V_{OUT} = 5.0 V

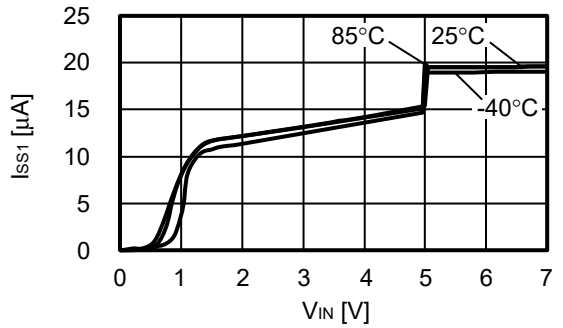

7. Ripple Rejection (Ta = 25°C)

7. 1 V_{OUT} = 1.5 V

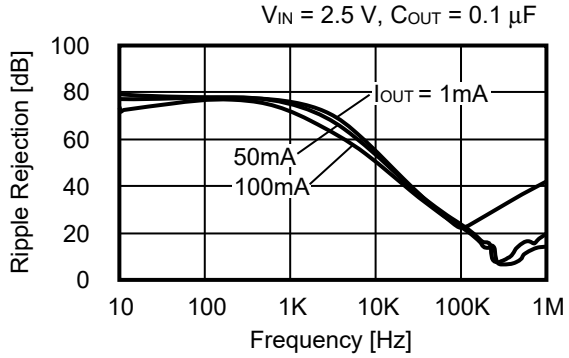

7. 2 V_{OUT} = 3.0 V

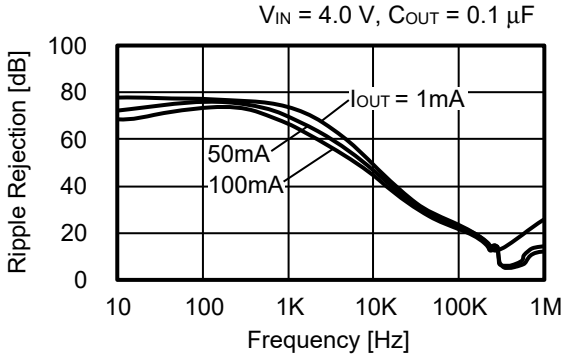

7. 3 V_{OUT} = 5.0 V

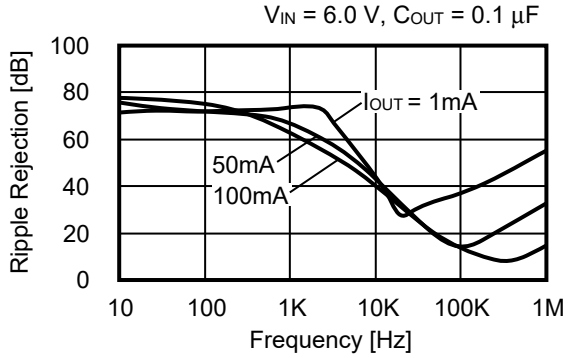

■ Reference Data

1. Input Transient Response Characteristics (Ta = 25°C)

1. 1 V_{OUT} = 1.5 V

I_{OUT} = 100 mA, t_r = t_f = 5.0 µs, C_{OUT} = 0.1 µF, C_{IN} = 0.1 µF

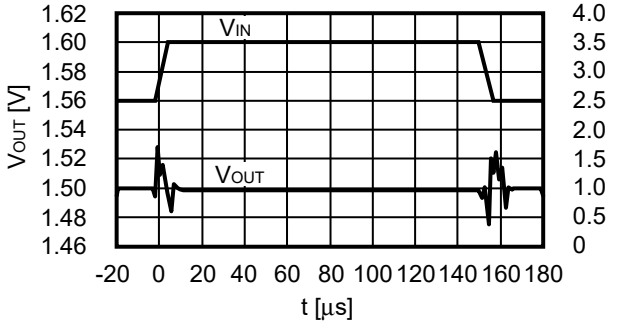

1. 2 V_{OUT} = 3.0 V

I_{OUT} = 100 mA, t_r = t_f = 5.0 µs, C_{OUT} = 0.1 µF, C_{IN} = 0.1 µF

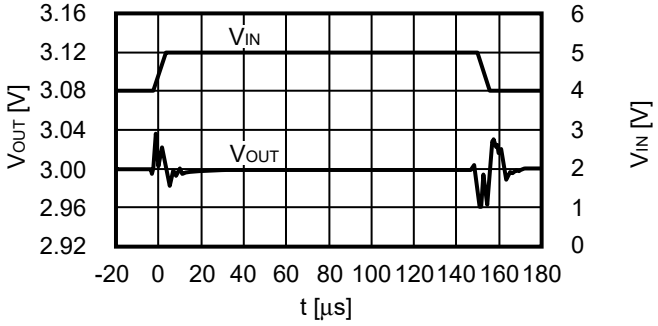

2. Load Transient Response Characteristics (Ta = 25°C)

2. 1 V_{OUT} = 1.5 V

V_{IN} = 2.5 V, C_{OUT} = 0.1 µF, C_{IN} = 0.1 µF, I_{OUT} = 50 mA ↔ 100 mA

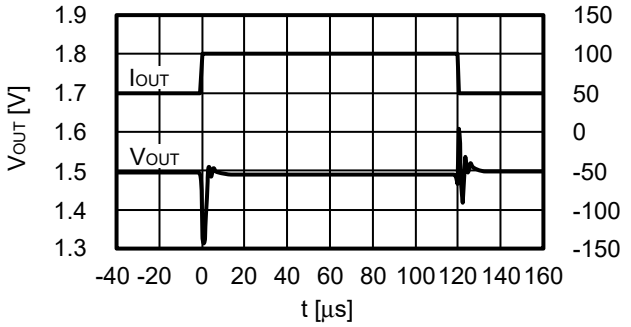

2. 2 V_{OUT} = 3.0 V

V_{IN} = 4.0 V, C_{OUT} = 0.1 µF, C_{IN} = 0.1 µF, I_{OUT} = 50 mA ↔ 100 mA

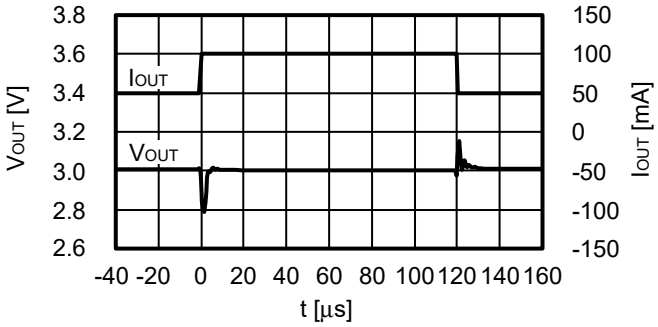

2. 3 V_{OUT} = 5.0 V

V_{IN} =6.0 V, C_{OUT} = 0.1 µF, C_{IN} = 0.1 µF, I_{OUT} = 50 mA ↔ 100 mA

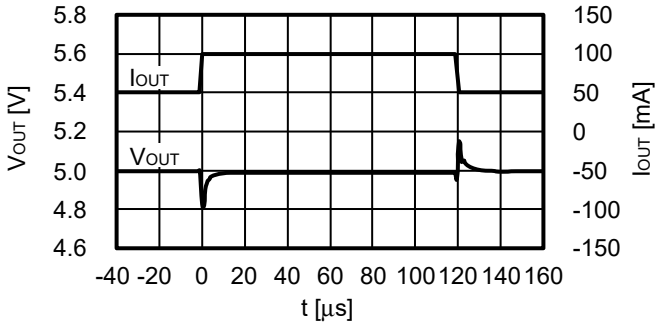

3. ON / OFF Pin Transient Response Characteristics (Ta = 25°C)

3. 1 V_{OUT} = 1.5 V

V_{IN} = 2.5 V, C_{OUT} = 0.1 µF, C_{IN} = 0.1 µF, I_{OUT} = 80 mA

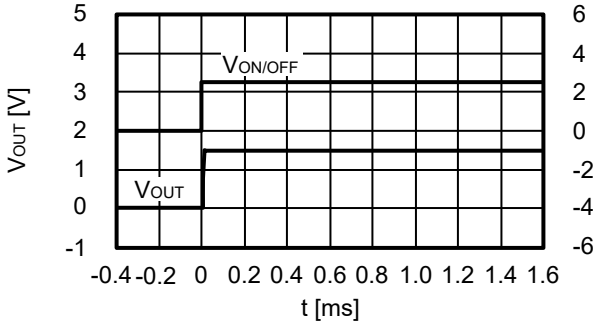

3. 2 V_{OUT} = 3.0 V

V_{IN} = 4.0 V, C_{OUT} = 0.1 µF, C_{IN} = 0.1 µF, I_{OUT} = 80 mA

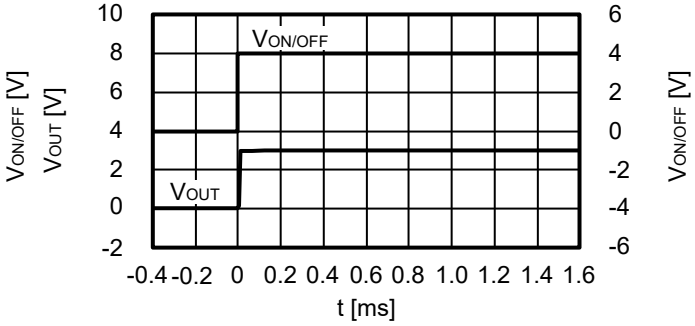

3. 3 V_{OUT} = 5.0 V

V_{IN} = 6.0 V, C_{OUT} = 0.1 µF, C_{IN} = 0.1 µF, I_{OUT} = 80 mA

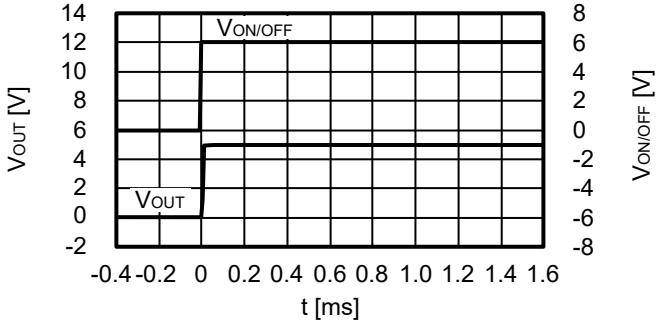

4. Input transient response characteristics vs. Capacity Value characteristics (Ta = 25°C)

4. 1 V_{OUT} = 1.5 V

V_{IN} = 2.5 V → 4.5 V, t_r = 5 µF, I_{OUT} = 100 mA

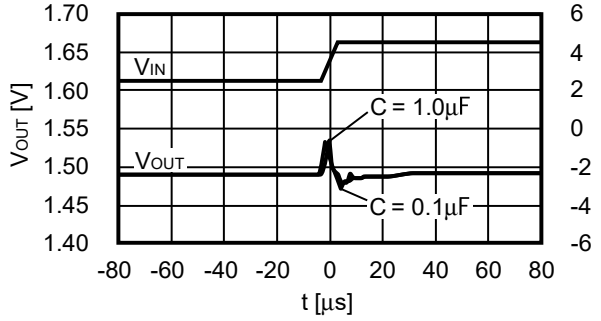

V_{IN} = 4.5 V → 2.5 V, t_r = 5 µF, I_{OUT} = 100 mA

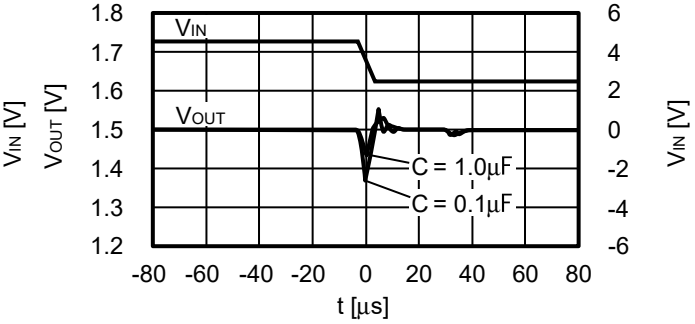

5. Load transient response characteristics vs. Capacity Value characteristics (Ta = 25°C)

5. 1 V_{OUT} = 1.5 V

V_{IN} = 2.5 V, I_{OUT} = 1 mA → 50 mA

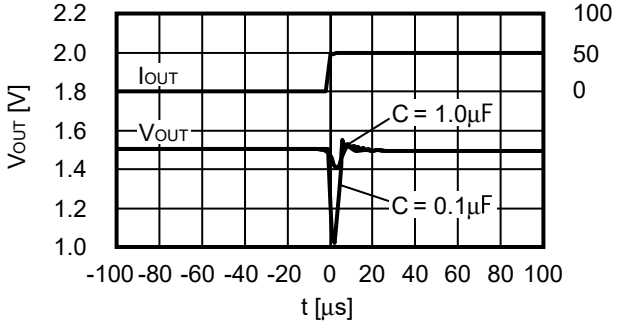

V_{IN} = 2.5 V, I_{OUT} = 50 mA → 1 mA

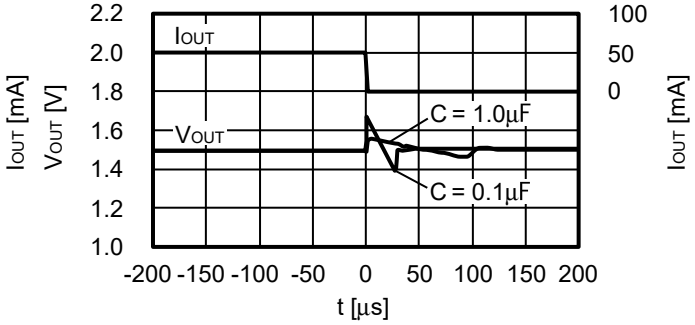

■ Marking Specifications

1. SOT-23-5

Top view

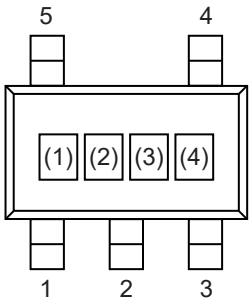

(1) to (3): Product code (Refer to **Product name vs. Product code**)
(4): Lot number

Product name vs. Product code

Product name	Product code		
	(1)	(2)	(3)
S-1132B18-M5T1x	Q	L	D
S-1132B25-M5T1x	Q	L	K
S-1132B33-M5T1x	Q	L	S

Remark 1. x: G or U
2. Please select products of environmental code = U for Sn 100%, halogen-free products.

2. SOT-89-5

Top view

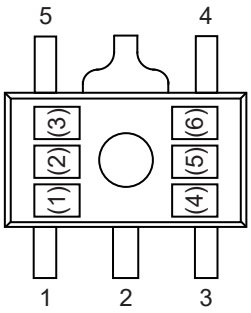

(1) to (3): Product code (Refer to **Product name vs. Product code**)
(4) to (6): Lot number

Product name vs. Product code

Product name	Product code		
	(1)	(2)	(3)
S-1132B18-U5T1x	Q	L	D
S-1132B25-U5T1x	Q	L	K
S-1132B33-U5T1x	Q	L	S

Remark 1. x: G or U
2. Please select products of environmental code = U for Sn 100%, halogen-free products.

3. SNT-6A(H)

Top view

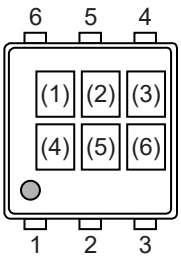

(1) to (3): Product code (Refer to **Product name vs. Product code**)
(4) to (6): Lot number

Product name vs. Product code

Product name	Product code		
	(1)	(2)	(3)
S-1132B18-I6T2U	Q	L	D
S-1132B25-I6T2U	Q	L	K
S-1132B33-I6T2U	Q	L	S

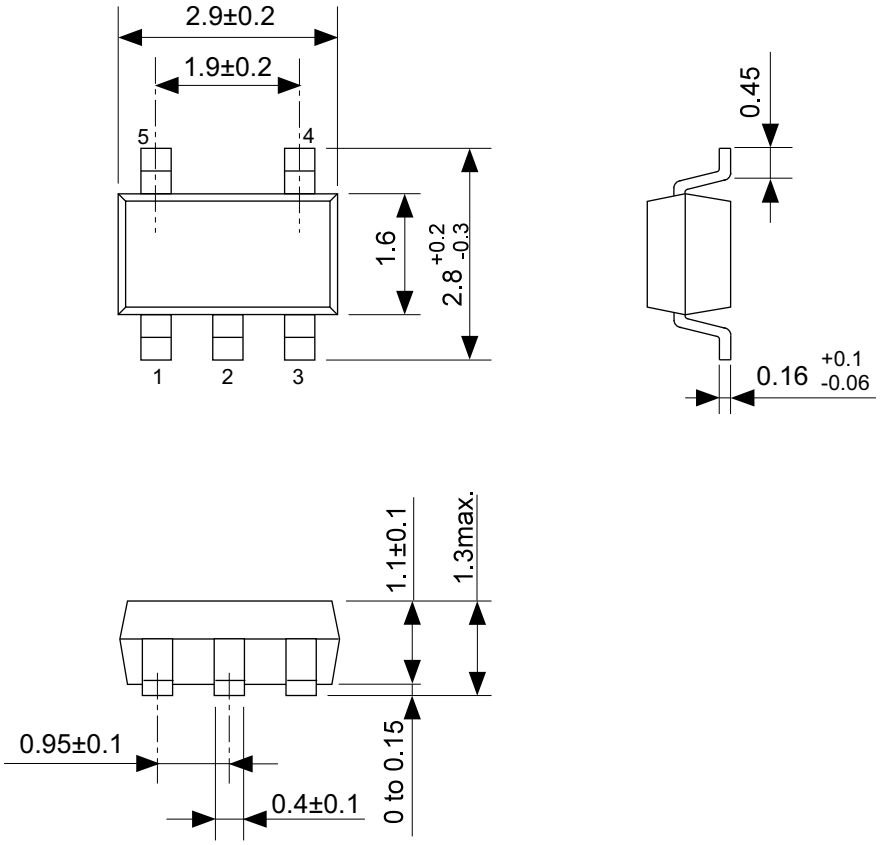

No. MP005-A-P-SD-1.3

TITLE	SOT235-A-PKG Dimensions
No.	MP005-A-P-SD-1.3
ANGLE	
UNIT	mm

ABLIC Inc.

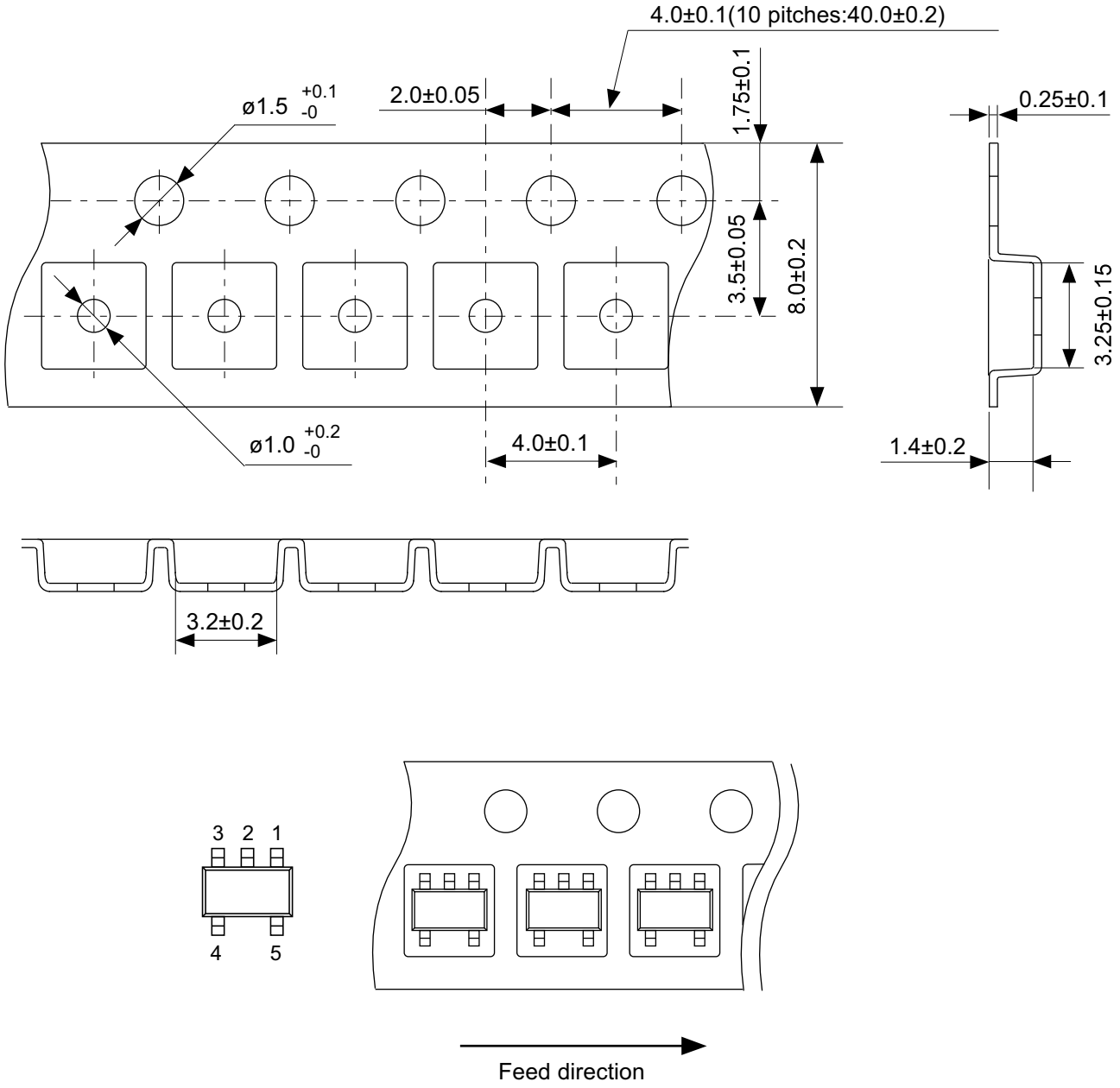

No. MP005-A-C-SD-2.1

TITLE	SOT235-A-Carrier Tape
No.	MP005-A-C-SD-2.1
ANGLE	
UNIT	mm
ABLIC Inc.	

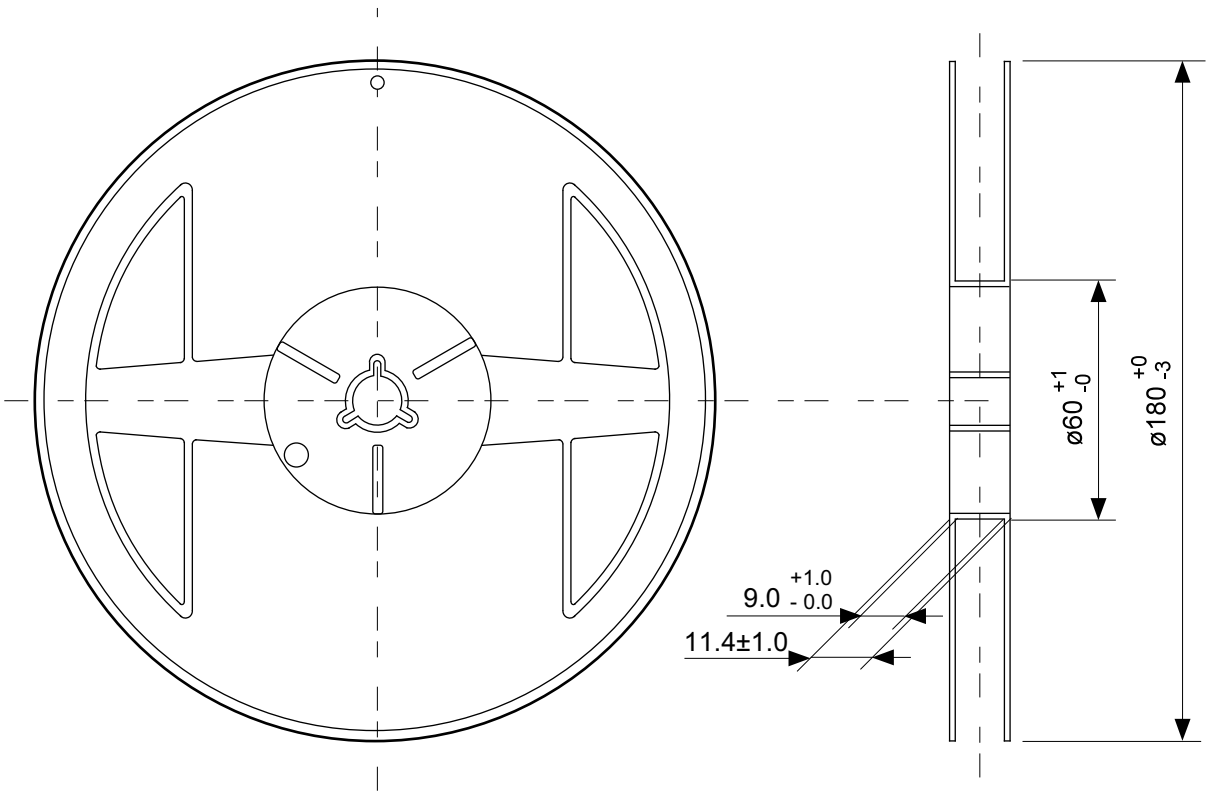

Enlarged drawing in the central part

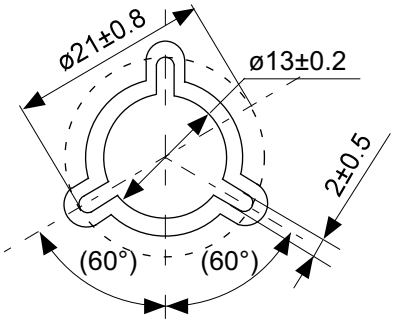

No. MP005-A-R-SD-2.0

TITLE	SOT235-A-Reel		
No.	MP005-A-R-SD-2.0		
ANGLE		QTY.	3,000
UNIT	mm		
ABLIC Inc.			

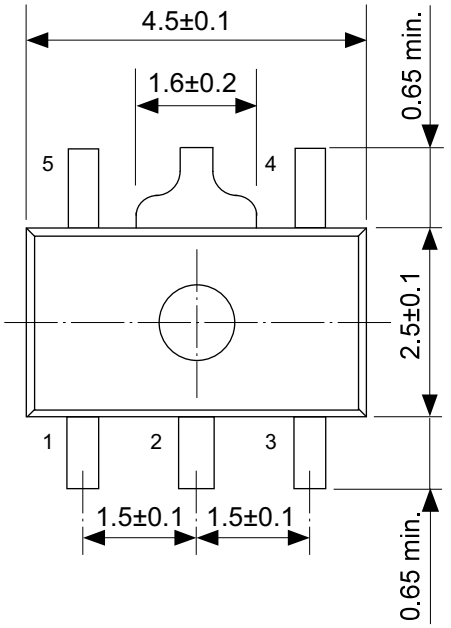

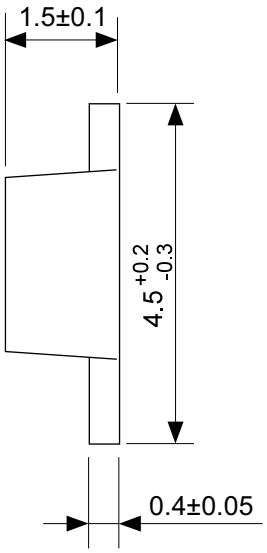

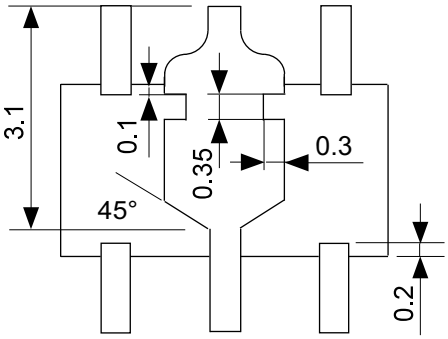

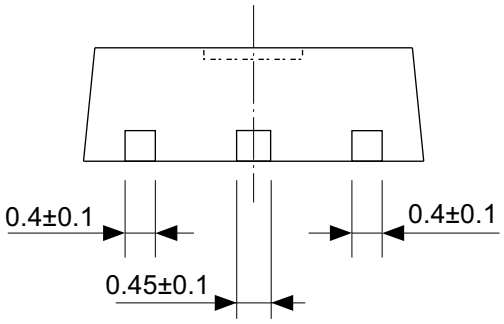

No. UP005-A-P-SD-2.0

TITLE	SOT895-A-PKG Dimensions
No.	UP005-A-P-SD-2.0
ANGLE	
UNIT	mm

ABLIC Inc.

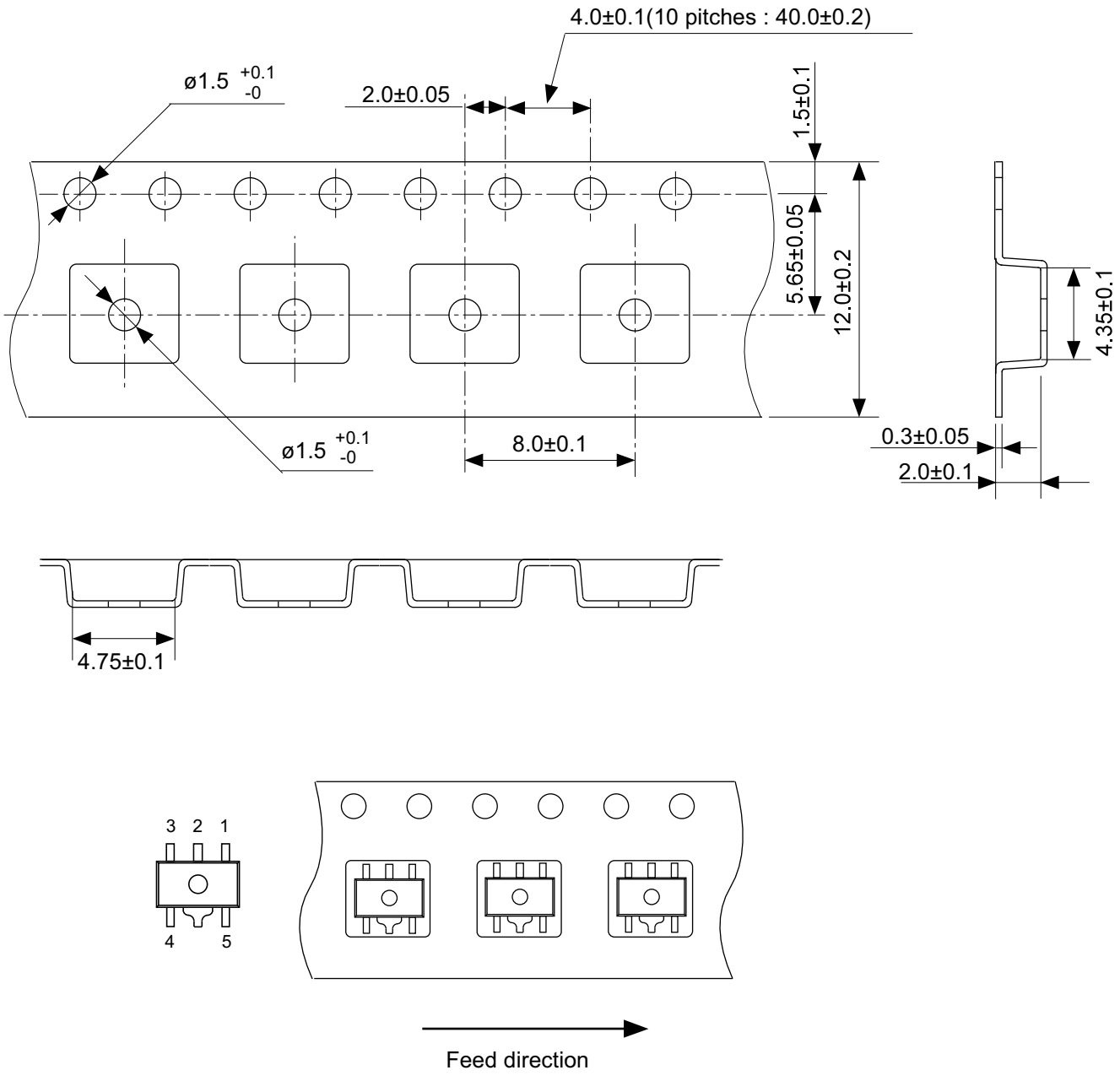

No. UP005-A-C-SD-2.0

TITLE	SOT895-A-Carrier Tape
No.	UP005-A-C-SD-2.0
ANGLE	
UNIT	mm
ABLIC Inc.	

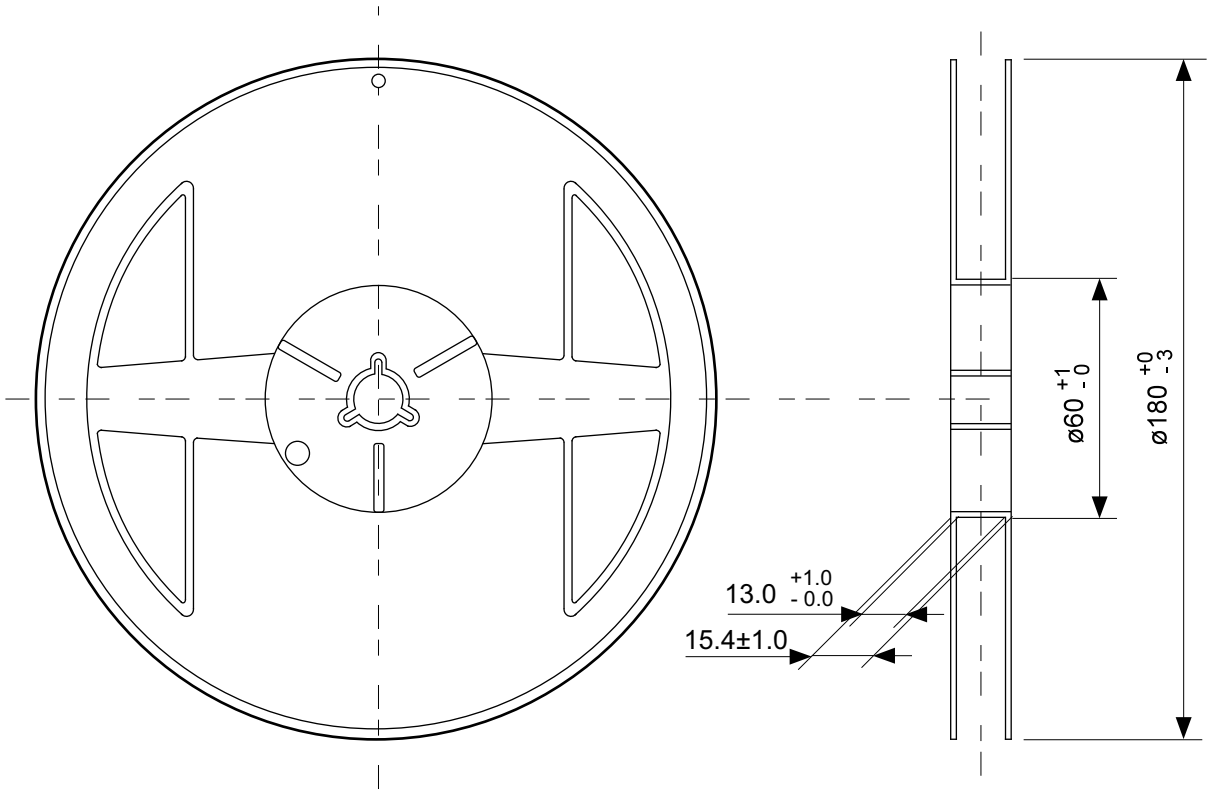

Enlarged drawing in the central part

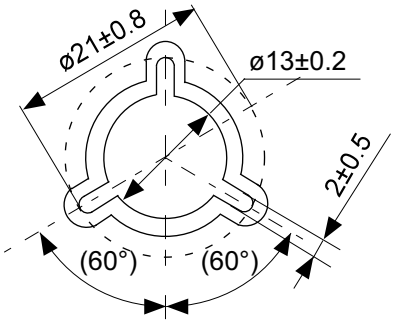

No. UP005-A-R-SD-2.0

TITLE	SOT895-A-Reel		
No.	UP005-A-R-SD-2.0		
ANGLE		QTY.	1,000
UNIT	mm		
ABLIC Inc.			

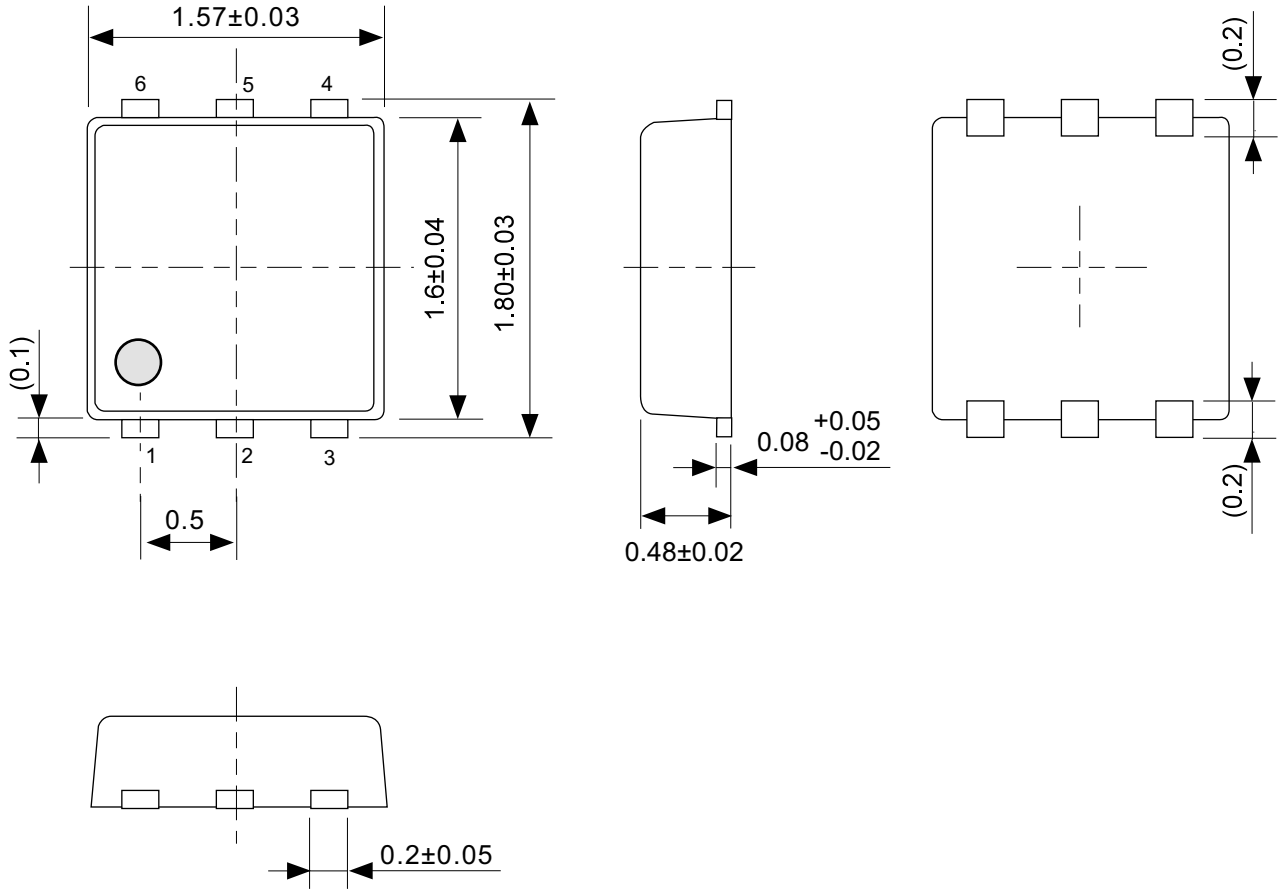

No. PI006-A-P-SD-2.1

TITLE	SNT-6A(H)-A-PKG Dimensions
No.	PI006-A-P-SD-2.1
ANGLE	
UNIT	mm

ABLIC Inc.

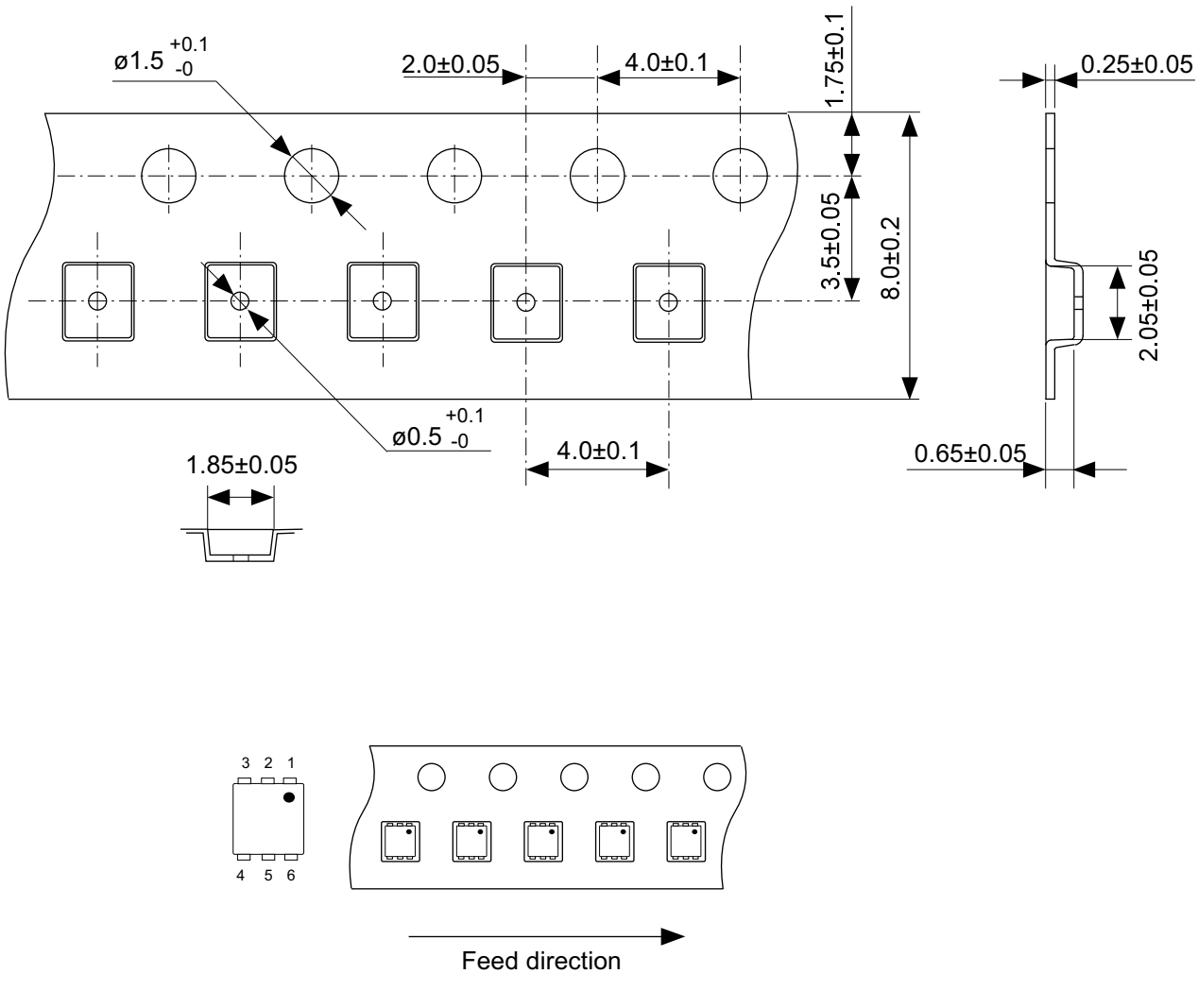

No. PI006-A-C-SD-2.0

TITLE	SNT-6A(H)-A-Carrier Tape
No.	PI006-A-C-SD-2.0
ANGLE	
UNIT	mm
ABLIC Inc.	

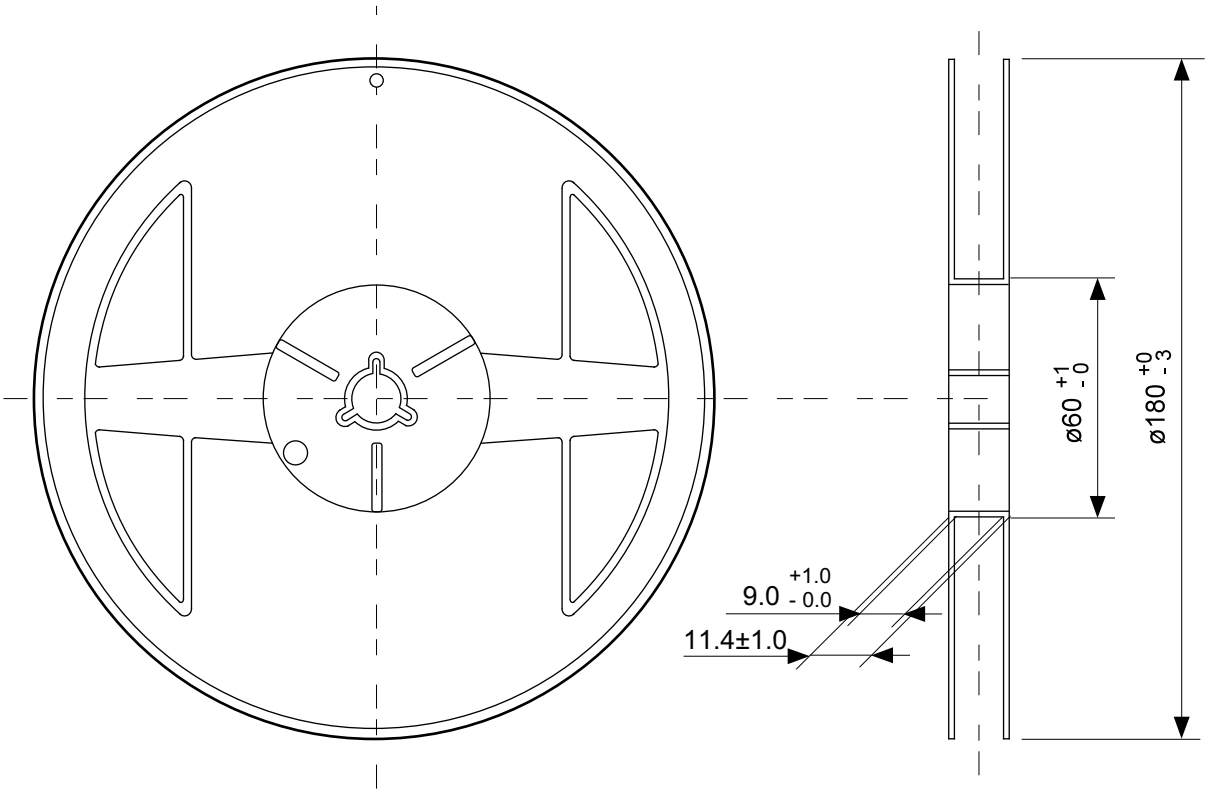

Enlarged drawing in the central part

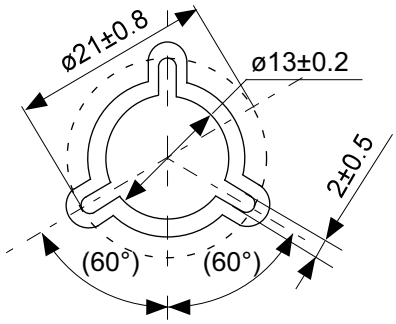

No. PI006-A-R-SD-2.0

TITLE	SNT-6A(H)-A-Reel		
No.	PI006-A-R-SD-2.0		
ANGLE		QTY.	5,000
UNIT	mm		
ABLIC Inc.			

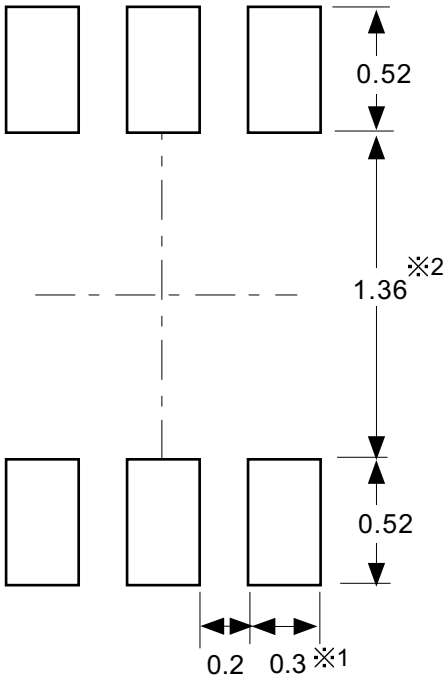

※1. ランドパターンの幅に注意してください (0.25 mm min. / 0.30 mm typ.)。
※2. パッケージ中央にランドパターンを広げないでください (1.30 mm ~ 1.40 mm)。

注意 1. パッケージのモールド樹脂下にシルク印刷やハンダ印刷などしないでください。
2. パッケージ下の配線上のソルダーレジストなどの厚みをランドパターン表面から0.03 mm 以下にしてください。
3. マスク開口サイズと開口位置はランドパターンと合わせてください。
4. 詳細は〝SNTパッケージ活用の手引き〟を参照してください。

※1. Pay attention to the land pattern width (0.25 mm min. / 0.30 mm typ.).
※2. Do not widen the land pattern to the center of the package (1.30 mm to 1.40 mm).

Caution 1. Do not do silkscreen printing and solder printing under the mold resin of the package.
2. The thickness of the solder resist on the wire pattern under the package should be 0.03 mm or less from the land pattern surface.
3. Match the mask aperture size and aperture position with the land pattern.
4. Refer to "SNT Package User's Guide" for details.

※1. 请注意焊盘模式的宽度 (0.25 mm min. / 0.30 mm typ.)。
※2. 请勿向封装中间扩展焊盘模式 (1.30 mm ~ 1.40 mm)。

注意 1. 请勿在树脂型封装的下面印刷丝网、焊锡。
2. 在封装下、布线上的阻焊膜厚度 (从焊盘模式表面起) 请控制在 0.03 mm 以下。
3. 钢网的开口尺寸和开口位置请与焊盘模式对齐。
4. 详细内容请参阅 "SNT 封装的应用指南"。

No. PI006-A-L-SD-4.1

TITLE	SNT-6A(H)-A -Land Recommendation
No.	PI006-A-L-SD-4.1
ANGLE	
UNIT	mm
ABLIC Inc.	

Disclaimers (Handling Precautions)

1. All the information described herein (product data, specifications, figures, tables, programs, algorithms and application circuit examples, etc.) is current as of publishing date of this document and is subject to change without notice.
2. The circuit examples and the usages described herein are for reference only, and do not guarantee the success of any specific mass-production design.
   ABLIC Inc. is not liable for any losses, damages, claims or demands caused by the reasons other than the products described herein (hereinafter "the products") or infringement of third-party intellectual property right and any other right due to the use of the information described herein.
3. ABLIC Inc. is not liable for any losses, damages, claims or demands caused by the incorrect information described herein.
4. Be careful to use the products within their ranges described herein. Pay special attention for use to the absolute maximum ratings, operation voltage range and electrical characteristics, etc.
   ABLIC Inc. is not liable for any losses, damages, claims or demands caused by failures and / or accidents, etc. due to the use of the products outside their specified ranges.
5. Before using the products, confirm their applications, and the laws and regulations of the region or country where they are used and verify suitability, safety and other factors for the intended use.
6. When exporting the products, comply with the Foreign Exchange and Foreign Trade Act and all other export-related laws, and follow the required procedures.
7. The products are strictly prohibited from using, providing or exporting for the purposes of the development of weapons of mass destruction or military use. ABLIC Inc. is not liable for any losses, damages, claims or demands caused by any provision or export to the person or entity who intends to develop, manufacture, use or store nuclear, biological or chemical weapons or missiles, or use any other military purposes.
8. The products are not designed to be used as part of any device or equipment that may affect the human body, human life, or assets (such as medical equipment, disaster prevention systems, security systems, combustion control systems, infrastructure control systems, vehicle equipment, traffic systems, in-vehicle equipment, aviation equipment, aerospace equipment, and nuclear-related equipment), excluding when specified for in-vehicle use or other uses by ABLIC, Inc. Do not apply the products to the above listed devices and equipments.
   ABLIC Inc. is not liable for any losses, damages, claims or demands caused by unauthorized or unspecified use of the products.
9. In general, semiconductor products may fail or malfunction with some probability. The user of the products should therefore take responsibility to give thorough consideration to safety design including redundancy, fire spread prevention measures, and malfunction prevention to prevent accidents causing injury or death, fires and social damage, etc. that may ensue from the products' failure or malfunction.
   The entire system in which the products are used must be sufficiently evaluated and judged whether the products are allowed to apply for the system on customer's own responsibility.
10. The products are not designed to be radiation-proof. The necessary radiation measures should be taken in the product design by the customer depending on the intended use.
11. The products do not affect human health under normal use. However, they contain chemical substances and heavy metals and should therefore not be put in the mouth. The fracture surfaces of wafers and chips may be sharp. Be careful when handling these with the bare hands to prevent injuries, etc.
12. When disposing of the products, comply with the laws and ordinances of the country or region where they are used.
13. The information described herein contains copyright information and know-how of ABLIC Inc. The information described herein does not convey any license under any intellectual property rights or any other rights belonging to ABLIC Inc. or a third party. Reproduction or copying of the information from this document or any part of this document described herein for the purpose of disclosing it to a third-party is strictly prohibited without the express permission of ABLIC Inc.
14. For more details on the information described herein or any other questions, please contact ABLIC Inc.'s sales representative.
15. This Disclaimers have been delivered in a text using the Japanese language, which text, despite any translations into the English language and the Chinese language, shall be controlling.

2.4-2019.07

ENTEGRECİ

Bu belge www.entegreci.com üzerinden sunulmaktadır.

Elektronik komponent tedarikinde Entegreci

Entegreci, Eskişehir merkezli, Türkiye geneline satış yapan bir elektronik komponent mağazasıdır. Entegreler (IC), mikrodenetleyiciler, transistörler, diyotlar, pasif elemanlar, konnektörler, modüller ve geliştirme kartları tek adetten seri üretim adetlerine kadar satılır. Ürün sayfalarında güncel stok durumunu, fiyatı ve datasheet bağlantısını bulabilirsiniz.

Parça koduyla arama

Üretici parça numarasını yazın; stok ve fiyatı hemen görün.

www.entegreci.com

Ürün kategorileri

Entegreden kapasitöre tüm elektronik komponent kategorileri.

Kategorilere göz atın

Üreticiler

Aradığınız üreticinin ürünlerini tek sayfada inceleyin.

Üreticileri görün

Toplu alım ve teklif

Listede olmayan ya da yüksek adetli parçalar için teklif isteyin.

Teklif isteyin

www.entegreci.com | **destek@entegreci.com** | **0850 305 90 34**

Entegreci is an online electronic components store based in Türkiye. Search by manufacturer part number to see stock, prices and datasheets for integrated circuits, microcontrollers, transistors, passive components and connectors, or request a quote for parts that are not listed.

Bu sayfa Entegreci tarafından eklenmiştir. Belgenin önceki sayfaları asıl yayıncısına aittir ve içeriği değiştirilmemiştir; en güncel sürüm için belgenin yayıncısına başvurun.