S-1212B/D Series

www.ablic.com

105°C OPERATION, 36 V INPUT, 250 mA VOLTAGE REGULATOR

© ABLIC Inc., 2015-2023

Rev.3.2_00

The S-1212B/D Series, developed by using high-withstand voltage CMOS process technology, is a positive voltage regulator with a high-withstand voltage, low current consumption and high-accuracy output voltage, and has a built-in ON / OFF circuit.
The S-1212B/D Series operates at the maximum operation voltage of 36 V and a low current consumption of 6.5 μA typ., and has a built-in low on-resistance output transistor which provides a very small dropout voltage and a large output current.
Also, a built-in overcurrent protection circuit to limit overcurrent of the output transistor and a built-in thermal shutdown circuit to limit heat are included.

■ Features

- Output voltage: 2.5 V to 16.0 V, selectable in 0.1 V step
- Input voltage: 3.0 V to 36 V
- Output voltage accuracy: ±2.0% (Ta = +25°C)
- Current consumption: During operation: 6.5 μA typ. (Ta = +25°C)
  During power-off: 0.1 μA typ. (Ta = +25°C)
- Output current: Possible to output 250 mA (at $V_{IN} \geq V_{OUT(S)} + 2.0$ V)*1
- Input capacitor: A ceramic capacitor can be used. (1.0 μF or more)
- Output capacitor: A ceramic capacitor can be used. (1.0 μF to 100 μF)
- Built-in overcurrent protection circuit: Limits overcurrent of output transistor.
- Built-in thermal shutdown circuit: Detection temperature 165°C typ.
- Built-in ON / OFF circuit: Ensures long battery life.
  Discharge shunt function is available.
- Operation temperature range: Ta = −40°C to +105°C
- Lead-free (Sn 100%), halogen-free

***1.** Please make sure that the loss of the IC will not exceed the power dissipation when the output current is large.

■ Applications

- Constant-voltage power supply for industrial equipment
- Constant-voltage power supply for home electric appliance

■ Packages

- TO-252-5S(A)
- HSOP-8A
- HSOP-6
- SOT-89-5
- HTMSOP-8
- SOT-23-5

■ Block Diagram

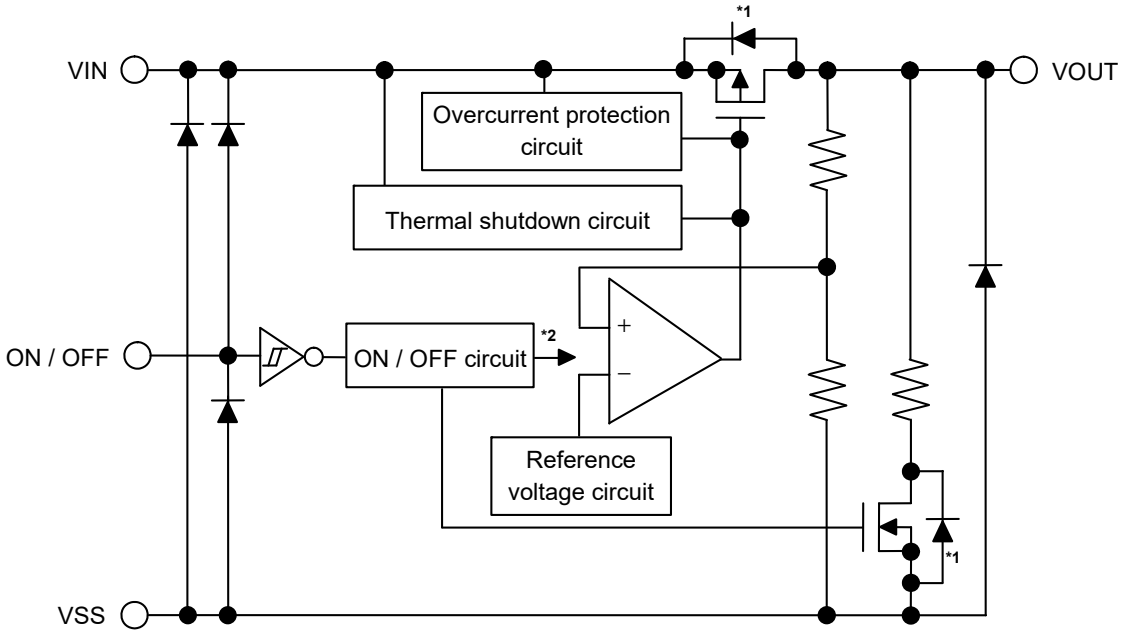

***1.** Parasitic diode
***2.** The ON / OFF circuit controls the internal circuit and the output transistor.

Figure 1

■ Product Name Structure

Users can select the output voltage and package type for the S-1212B/D Series. Refer to "**1. Product name**" regarding the contents of product name, "**2. Function list of product types**" regarding the product type, "**3. Packages**" regarding the package drawings and "**4. Product name list**" for details of product names.

1. Product name

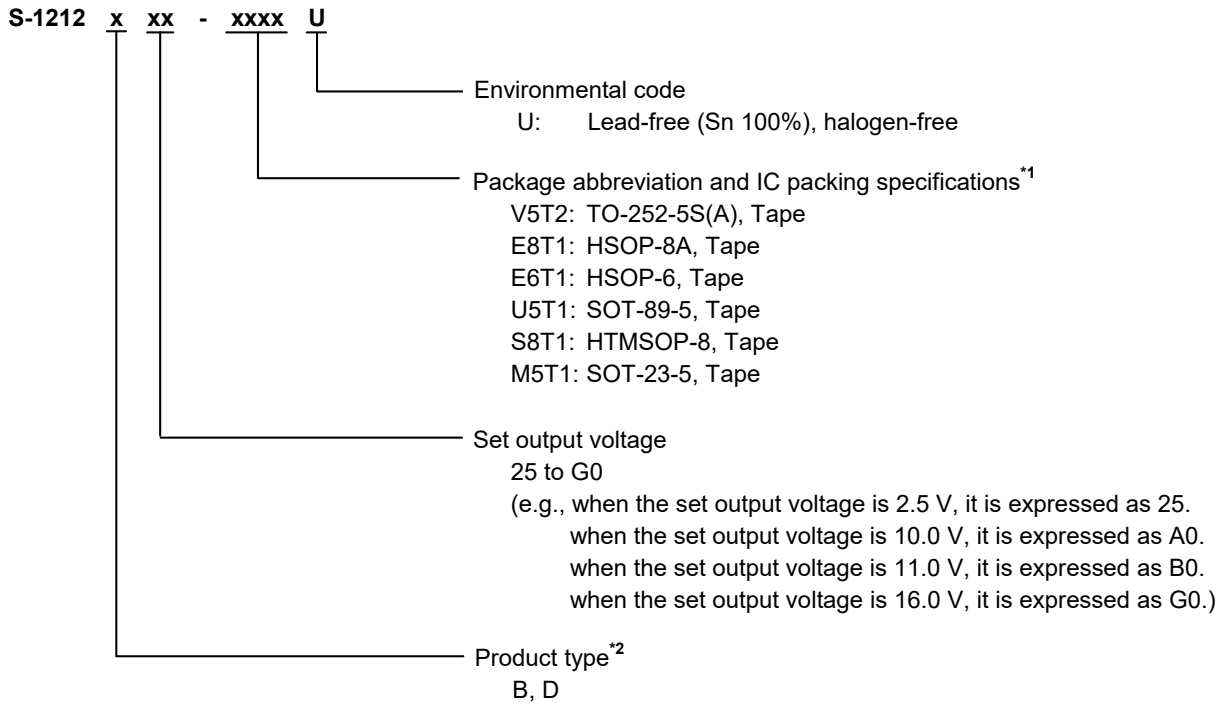

***1.** Refer to the tape drawing.
***2.** Refer to "**2. Function list of product types**" and "**3. ON / OFF pin**" in "**■ Operation**".

2. Function list of product types

Table 1

Product Type	ON / OFF Logic	ON / OFF Pin Input Voltage "H"	ON / OFF Pin Input Voltage "L"
B	Active "H"	1.5 V min.	0.25 V max.
D	Active "H"	2.0 V min.	0.8 V max.

3. Packages

Table 2 Package Drawing Codes

Package Name	Dimension	Tape	Reel	Land
TO-252-5S(A)	VA005-A-P-SD	VA005-A-C-SD	VA005-A-R-SD	VA005-A-L-SD
HSOP-8A	FH008-A-P-SD	FH008-A-C-SD	FH008-A-R-SD	FH008-A-L-SD
HSOP-6	FH006-A-P-SD	FH006-A-C-SD	FH006-A-R-S1	FH006-A-L-SD
SOT-89-5	UP005-A-P-SD	UP005-A-C-SD	UP005-A-R-SD	–
HTMSOP-8	FP008-A-P-SD	FP008-A-C-SD	FP008-A-R-SD	FP008-A-L-SD
SOT-23-5	MP005-A-P-SD	MP005-A-C-SD	MP005-A-R-SD	–

4. Product name list

4. 1 S-1212B/D Series B type

ON / OFF logic: Active "H"
ON / OFF pin input voltage "H" (V_{SH}) = 1.5 V min., ON / OFF pin input voltage "L" (V_{SL}) = 0.25 V max.
.

Table 3

Output Voltage	TO-252-5S(A)	HSOP-8A	HSOP-6	SOT-89-5	HTMSOP-8	SOT-23-5
3.3 V ± 2.0%	S-1212B33-V5T2U	S-1212B33-E8T1U	S-1212B33-E6T1U	S-1212B33-U5T1U	S-1212B33-S8T1U	S-1212B33-M5T1U
5.0 V ± 2.0%	S-1212B50-V5T2U	S-1212B50-E8T1U	S-1212B50-E6T1U	S-1212B50-U5T1U	S-1212B50-S8T1U	S-1212B50-M5T1U
6.0 V ± 2.0%	–	–	–	–	–	S-1212B60-M5T1U
8.0 V ± 2.0%	S-1212B80-V5T2U	S-1212B80-E8T1U	S-1212B80-E6T1U	S-1212B80-U5T1U	S-1212B80-S8T1U	S-1212B80-M5T1U
12.0 V ± 2.0%	S-1212BC0-V5T2U	S-1212BC0-E8T1U	S-1212BC0-E6T1U	S-1212BC0-U5T1U	S-1212BC0-S8T1U	S-1212BC0-M5T1U

Remark Please contact our sales representatives for products with specifications other than the above output voltage.

4. 2 S-1212B/D Series D type

ON / OFF logic: Active "H"
ON / OFF pin input voltage "H" (V_{SH}) = 2.0 V min., ON / OFF pin input voltage "L" (V_{SL}) = 0.8 V max.

Table 4

Output Voltage	TO-252-5S(A)	HSOP-8A	HSOP-6	SOT-89-5	HTMSOP-8	SOT-23-5
3.3 V ± 2.0%	S-1212D33-V5T2U	S-1212D33-E8T1U	S-1212D33-E6T1U	S-1212D33-U5T1U	S-1212D33-S8T1U	S-1212D33-M5T1U
5.0 V ± 2.0%	S-1212D50-V5T2U	S-1212D50-E8T1U	S-1212D50-E6T1U	S-1212D50-U5T1U	S-1212D50-S8T1U	S-1212D50-M5T1U
6.0 V ± 2.0%	–	–	–	–	–	S-1212D60-M5T1U
8.0 V ± 2.0%	S-1212D80-V5T2U	S-1212D80-E8T1U	S-1212D80-E6T1U	S-1212D80-U5T1U	S-1212D80-S8T1U	S-1212D80-M5T1U
12.0 V ± 2.0%	S-1212DC0-V5T2U	S-1212DC0-E8T1U	S-1212DC0-E6T1U	S-1212DC0-U5T1U	S-1212DC0-S8T1U	S-1212DC0-M5T1U

Remark Please contact our sales representatives for products with specifications other than the above output voltage.

■ Pin Configurations

1. TO-252-5S(A)

Top view

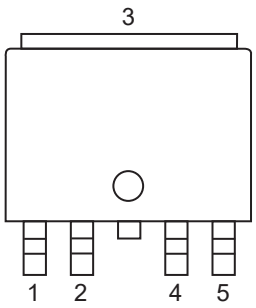

Figure 2

Table 5

Pin No.	Symbol	Description
1	VOUT	Output voltage pin
2	ON / OFF	ON / OFF pin
3	VSS	GND pin
4	NC*1	No connection
5	VIN	Input voltage pin

***1.** The NC pin is electrically open.
The NC pin can be connected to the VIN pin or the VSS pin.

2. HSOP-8A

Top view

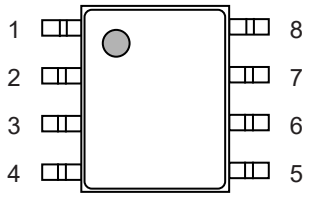

Bottom view

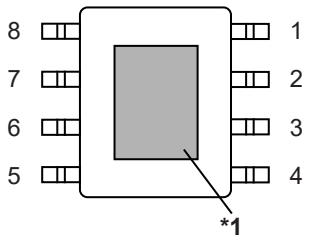

Figure 3

Table 6

Pin No.	Symbol	Description
1	VOUT	Output voltage pin
2	NC*2	No connection
3	NC*2	No connection
4	ON / OFF	ON / OFF pin
5	VSS	GND pin
6	NC*2	No connection
7	NC*2	No connection
8	VIN	Input voltage pin

***1.** Connect the heat sink of backside at shadowed area to the board, and set electric potential GND.
However, do not use it as the function of electrode.
***2.** The NC pin is electrically open.
The NC pin can be connected to the VIN pin or the VSS pin.

3. HSOP-6

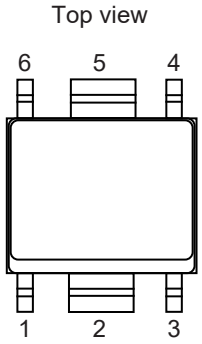

Figure 4

Table 7

Pin No.	Symbol	Description
1	VOUT	Output voltage pin
2	VSS	GND pin
3	ON / OFF	ON / OFF pin
4	NC*1	No connection
5	VSS	GND pin
6	VIN	Input voltage pin

***1.** The NC pin is electrically open.
The NC pin can be connected to the VIN pin or the VSS pin.

4. SOT-89-5

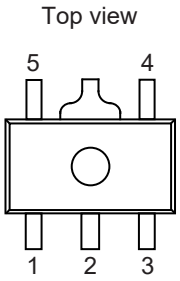

Figure 5

Table 8

Pin No.	Symbol	Description
1	NC*1	No connection
2	VSS	GND pin
3	VIN	Input voltage pin
4	VOUT	Output voltage pin
5	ON / OFF	ON / OFF pin

***1.** The NC pin is electrically open.
The NC pin can be connected to the VIN pin or the VSS pin.

5. HTMSOP-8

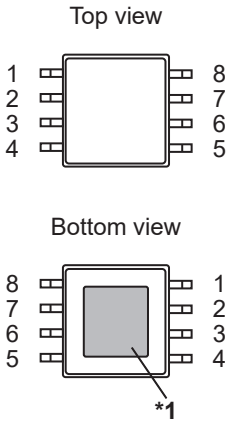

Figure 6

Table 9

Pin No.	Symbol	Description
1	VOUT	Output voltage pin
2	NC*2	No connection
3	NC*2	No connection
4	ON / OFF	ON / OFF pin
5	VSS	GND pin
6	NC*2	No connection
7	NC*2	No connection
8	VIN	Input voltage pin

***1.** Connect the heat sink of backside at shadowed area to the board, and set electric potential GND.
However, do not use it as the function of electrode.

***2.** The NC pin is electrically open.
The NC pin can be connected to the VIN pin or the VSS pin.

6. SOT-23-5

Top view

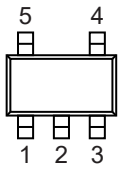

Figure 7

Table 10

Pin No.	Symbol	Description
1	VIN	Input voltage pin
2	VSS	GND pin
3	NC*1	No connection
4	ON / OFF	ON / OFF pin
5	VOUT	Output voltage pin

***1.** The NC pin is electrically open.
The NC pin can be connected to the VIN pin or the VSS pin.

■ Absolute Maximum Ratings

Table 11

(Ta = +25°C unless otherwise specified)

Item	Symbol	Absolute Maximum Rating	Unit
Input voltage	V_{IN}	V_{SS} – 0.3 to V_{SS} + 45	V
	$V_{ON / OFF}$	V_{SS} – 0.3 to V_{IN} + 0.3 ≤ V_{SS} + 45	V
Output voltage	V_{OUT}	V_{SS} – 0.3 to V_{IN} + 0.3 ≤ V_{SS} + 45	V
Output current	I_{OUT}	280	mA
Junction temperature	T_j	–40 to +150	°C
Operation ambient temperature	T_{opr}	–40 to +105	°C
Storage temperature	T_{stg}	–40 to +150	°C

Caution The absolute maximum ratings are rated values exceeding which the product could suffer physical damage. These values must therefore not be exceeded under any conditions.

■ Thermal Resistance Value

Table 12

Item	Symbol	Condition		Min.	Typ.	Max.	Unit
Junction-to-ambient thermal resistance*1	θ_{JA}	TO-252-5S(A)	Board A	–	90	–	°C/W
			Board B	–	58	–	°C/W
			Board C	–	38	–	°C/W
			Board D	–	30	–	°C/W
			Board E	–	29	–	°C/W
		HSOP-8A	Board A	–	115	–	°C/W
			Board B	–	82	–	°C/W
			Board C	–	42	–	°C/W
			Board D	–	43	–	°C/W
			Board E	–	35	–	°C/W
		HSOP-6	Board A	–	106	–	°C/W
			Board B	–	82	–	°C/W
			Board C	–	–	–	°C/W
			Board D	–	51	–	°C/W
			Board E	–	48	–	°C/W
		SOT-89-5	Board A	–	123	–	°C/W
			Board B	–	90	–	°C/W
			Board C	–	–	–	°C/W
			Board D	–	53	–	°C/W
			Board E	–	41	–	°C/W
		HTMSOP-8	Board A	–	161	–	°C/W
			Board B	–	116	–	°C/W
			Board C	–	44	–	°C/W
			Board D	–	44	–	°C/W
			Board E	–	35	–	°C/W
		SOT-23-5	Board A	–	180	–	°C/W
			Board B	–	143	–	°C/W
			Board C	–	–	–	°C/W
			Board D	–	–	–	°C/W
			Board E	–	–	–	°C/W

***1.** Test environment: compliance with JEDEC STANDARD JESD51-2A

Remark Refer to "■ **Power Dissipation**" and "**Test Board**" for details.

■ Electrical Characteristics

Table 13

(Ta = +25°C unless otherwise specified)

Item	Symbol	Condition		Min.	Typ.	Max.	Unit	Test Circuit
Output voltage*1	$V_{OUT(E)}$	$V_{IN} = V_{OUT(S)} + 2.0$ V, $I_{OUT} = 10$ mA		$V_{OUT(S)} \times 0.980$	$V_{OUT(S)}$	$V_{OUT(S)} \times 1.020$	V	1
Output current*2	I_{OUT}	$V_{IN} \geq V_{OUT(S)} + 2.0$ V		250*4	–	–	mA	3
Dropout voltage*3	V_{drop}	$I_{OUT} = 125$ mA		–	0.35	–	V	1
		$I_{OUT} = 250$ mA		–	0.80	–	V	1
Line regulation	$\frac{\Delta V_{OUT1}}{\Delta V_{IN} \bullet V_{OUT}}$	$V_{OUT(S)} + 0.5$ V ≤ V_{IN} ≤ 36 V, $I_{OUT} = 10$ mA, T_j = +25°C		–	0.01	0.03	%/V	1
Load regulation	ΔV_{OUT2}	$V_{IN} = V_{OUT(S)} + 2.0$ V, 2.5 V ≤ $V_{OUT(S)}$ < 5.1 V, 0.1 mA ≤ I_{OUT} ≤ 40 mA, T_j = +25°C		–	16	30	mV	1
		$V_{IN} = V_{OUT(S)} + 2.0$ V, 5.1 V ≤ $V_{OUT(S)}$ < 12.1 V, 0.1 mA ≤ I_{OUT} ≤ 40 mA, T_j = +25°C		–	16	35	mV	1
		$V_{IN} = V_{OUT(S)} + 2.0$ V, 12.1 V ≤ $V_{OUT(S)}$ ≤ 16.0 V, 0.1 mA ≤ I_{OUT} ≤ 40 mA, T_j = +25°C		–	16	40	mV	1
Current consumption during operation	I_{SS1}	$V_{IN} = 18.0$ V, $V_{ON / OFF} = V_{IN}$, $I_{OUT} = 0.01$ mA		–	6.5	8.5	µA	2
Current consumption during power-off	I_{SS2}	$V_{IN} = 18.0$ V, $V_{ON / OFF} = 0$ V, no load		–	0.1	3.5	µA	2
Input voltage	V_{IN}	–		3.0	–	36	V	–
ON / OFF pin input voltage "H"	V_{SH}	$V_{IN} = 18.0$ V, $R_L = 1.0$ kΩ, determined by V_{OUT} output level	B type (ON / OFF logic active "H")	1.5	–	–	V	4
			D type (ON / OFF logic active "H")	2.0	–	–	V	4
ON / OFF pin input voltage "L"	V_{SL}	$V_{IN} = 18.0$ V, $R_L = 1.0$ kΩ, determined by V_{OUT} output level	B type (ON / OFF logic active "H")	–	–	0.25	V	4
			D type (ON / OFF logic active "H")	–	–	0.8	V	4
ON / OFF pin input current "H"	I_{SH}	$V_{IN} = 18.0$ V, $V_{ON / OFF} = V_{IN}$		–0.1	–	0.1	µA	4
ON / OFF pin input current "L"	I_{SL}	$V_{IN} = 18.0$ V, $V_{ON / OFF} = 0$ V		–0.1	–	0.1	µA	4
Ripple rejection	|RR|	$V_{IN} = V_{OUT(S)} + 2.0$ V, f = 100 Hz, $\Delta V_{rip} = 0.5$ Vrms, $I_{OUT} = 10$ mA	2.5 V ≤ $V_{OUT(S)}$ < 3.6 V	–	45	–	dB	5
			3.6 V ≤ $V_{OUT(S)}$ < 6.1 V	–	40	–	dB	5
			6.1 V ≤ $V_{OUT(S)}$ < 10.1 V	–	35	–	dB	5
			10.1 V ≤ $V_{OUT(S)}$ ≤ 16.0 V	–	30	–	dB	5
Short-circuit current	I_{short}	$V_{IN} = V_{OUT(S)} + 2.0$ V, $V_{ON / OFF} = V_{IN}$, $V_{OUT} = 0$ V		–	120	–	mA	3
Thermal shutdown detection temperature	T_{SD}	Junction temperature		–	165	–	°C	–
Thermal shutdown release temperature	T_{SR}	Junction temperature		–	140	–	°C	–
Discharge shunt resistance during power-off	R_{LOW}	$V_{IN} = 18.0$ V, $V_{ON / OFF} = 0$ V, $V_{OUT} = 2.0$ V		–	70	–	kΩ	6

***1.** $V_{OUT(S)}$: Set output voltage
$V_{OUT(E)}$: Actual output voltage
The output voltage when $V_{IN} = V_{OUT(S)} + 2.0$ V, $I_{OUT} = 10$ mA

***2.** The output current at which the output voltage becomes 95% of $V_{OUT(E)}$ after gradually increasing the output current.

***3.** $V_{drop} = V_{IN1} - (V_{OUT3} \times 0.98)$
V_{IN1} is the input voltage at which the output voltage becomes 98% of V_{OUT3} after gradually decreasing the input voltage.
V_{OUT3} is the output voltage when $V_{IN} = V_{OUT(S)} + 2.0$ V, and $I_{OUT} = 125$ mA or 250 mA.

***4.** Due to limitation of the power dissipation, this value may not be satisfied. Attention should be paid to the power dissipation when the output current is large.
This specification is guaranteed by design.

■ Test Circuits

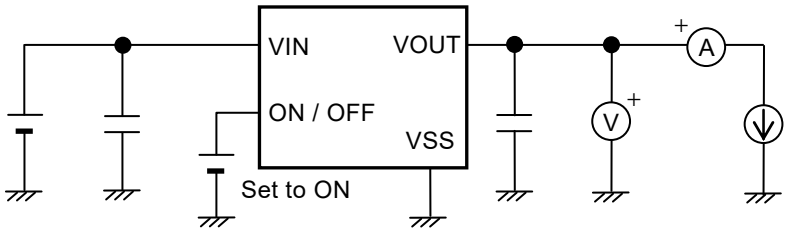

Figure 8 Test Circuit 1

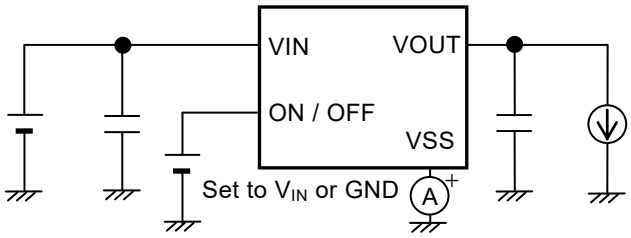

Figure 9 Test Circuit 2

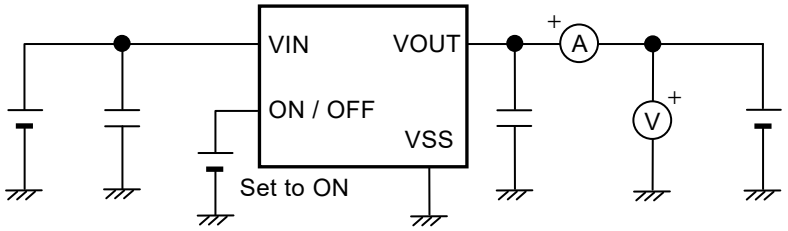

Figure 10 Test Circuit 3

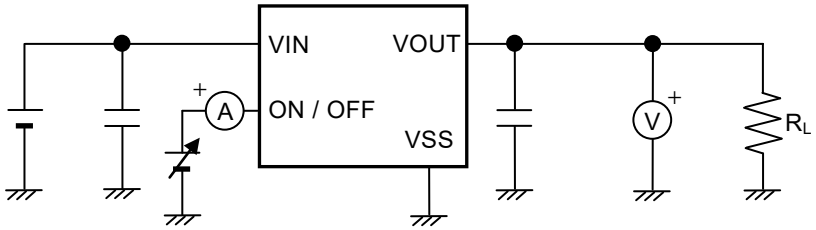

Figure 11 Test Circuit 4

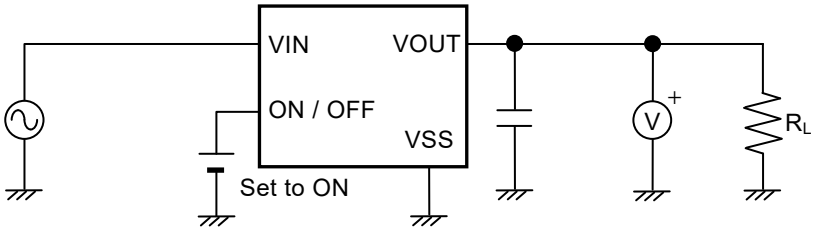

Figure 12 Test Circuit 5

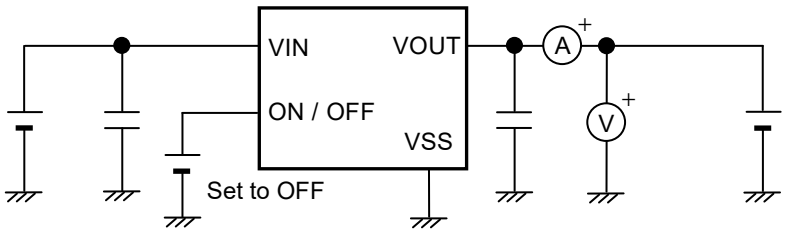

Figure 13 Test Circuit 6

■ Standard Circuit

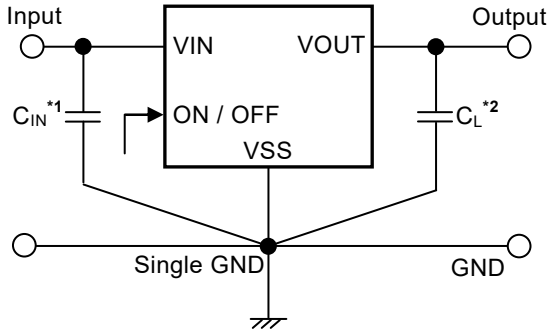

***1.** C_{IN} is a capacitor for stabilizing the input.
***2.** C_L is a capacitor for stabilizing the output.

Figure 14

Caution The above connection diagram and constants will not guarantee successful operation. Perform thorough evaluation using an actual application to set the constants.

■ Condition of Application

Input capacitor (C_{IN}): A ceramic capacitor with capacitance of 1.0 μF or more is recommended.
Output capacitor (C_L): A ceramic capacitor with capacitance of 1.0 μF to 100 μF is recommended.

Caution Generally, in a voltage regulator, an oscillation may occur depending on the selection of the external parts. Perform thorough evaluation including the temperature characteristics with an actual application using the above capacitors to confirm no oscillation occurs.

■ Selection of Input Capacitor (C_{IN}) and Output Capacitor (C_L)

The S-1212B/D Series requires C_L between the VOUT pin and the VSS pin for phase compensation. The operation is stabilized by a ceramic capacitor with capacitance of 1.0 μF to 100 μF. When using an OS capacitor, a tantalum capacitor or an aluminum electrolytic capacitor, the capacitance also must be 1.0 μF to 100 μF. However, an oscillation may occur depending on the equivalent series resistance (ESR).
Moreover, the S-1212B/D Series requires C_{IN} between the VIN pin and the VSS pin for a stable operation.
Generally, an oscillaiton may occur when a voltage regulator is used under the conditon that the impedance of the power supply is high.
Note that the output voltage transient characteristics varies depending on the capacitance of C_{IN} and C_L and the value of ESR.

Caution Perform thorough evaluation including the temperature characteristics with an actual application to select C_{IN} and C_L.

■ Explanation of Terms

1. Low dropout voltage regulator

This is a voltage regulator which made dropout voltage small by its built-in low on-resistance output transistor.

2. Output voltage (V_{OUT})

This voltage is output at an accuracy of ±2.0% when the input voltage, the output current and the temperature are in a certain condition*1.

***1.** Differs depending on the product.

Caution If the certain condition is not satisfied, the output voltage may exceed the accuracy range of ±2.0%. Refer to "■ Electrical Characteristics" and "■ Characteristics (Typical Data)" for details.

3. Line regulation $\left(\frac{\Delta V_{OUT1}}{\Delta V_{IN} \bullet V_{OUT}}\right)$

Indicates the dependency of the output voltage against the input voltage. That is, the value shows how much the output voltage changes due to a change in the input voltage after fixing output current constant.

4. Load regulation (ΔV_{OUT2})

Indicates the dependency of the output voltage against the output current. That is, the value shows how much the output voltage changes due to a change in the output current after fixing input voltage constant.

5. Dropout voltage (V_{drop})

Indicates the difference between input voltage (V_{IN1}) and the output voltage when the output voltage becomes 98% of the output voltage value (V_{OUT3}) at $V_{IN} = V_{OUT(S)} + 2.0$ V after the input voltage (V_{IN}) is decreased gradually.

$V_{drop} = V_{IN1} - (V_{OUT3} \times 0.98)$

■ Operation

1. Basic operation

Figure 15 shows the block diagram of the S-1212B/D Series to describe the basic operation.
The error amplifier compares the feedback voltage (V_{fb}) whose output voltage (V_{OUT}) is divided by the feedback resistors (R_s and R_f) with the reference voltage (V_{ref}). The error amplifier controls the output transistor, consequently, the regulator starts the operation that holds V_{OUT} constant without the influence of the input voltage (V_{IN}).

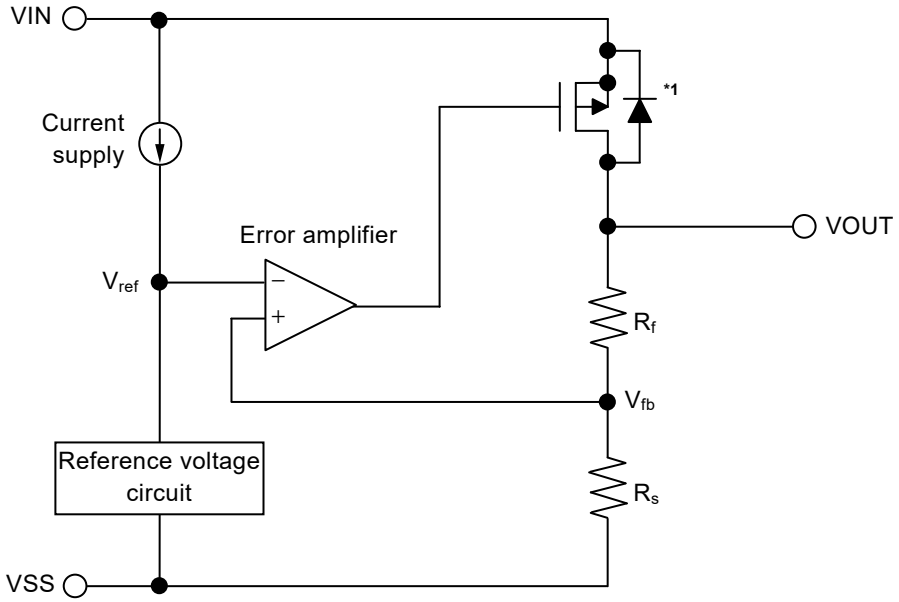

***1.** Parasitic diode

Figure 15

2. Output transistor

In the S-1212B/D Series, a low on-resistance P-channel MOS FET is used between the VIN pin and the VOUT pin as the output transistor. In order to hold V_{OUT} constant, the on-resistance of the output transistor varies appropriately according to the output current (I_{OUT}).

Caution Since a parasitic diode exists between the VIN pin and the VOUT pin due to the structure of the transistor, the IC may be damaged by a reverse current if V_{OUT} becomes higher than V_{IN}. Therefore, be sure that V_{OUT} does not exceed V_{IN} + 0.3 V.

3. ON / OFF pin

The ON / OFF pin controls the internal circuit and the output transistor in order to start and stop the regulator. When the ON / OFF pin is set to OFF, the internal circuit stops operating and the output transistor between the VIN pin and the VOUT pin is turned off, reducing current consumption significantly.
The internal equivalent circuit related to the ON / OFF pin is configured as shown in **Figure 16**. Since the ON / OFF pin is neither pulled down nor pulled up, do not use it in the floating status. When not using the ON / OFF pin, connect it to the VIN pin. Note that the current consumption increases when a voltage of V_{SL} max.*1 to V_{IN} – 0.3 V is applied to the ON / OFF pin.

Table 14

Product Type	ON / OFF Pin	Internal Circuit	VOUT Pin Voltage	Current Consumption
B / D	"H": ON	Operate	Constant value*2	I_{SS1}
B / D	"L": OFF	Stop	Pulled down to V_{SS}*3	I_{SS2}

***1.** Refer to **Table 13** in "■ **Electrical Characteristics**".
***2.** The constant value is output due to the regulating based on the set output voltage value.
***3.** The VOUT pin voltage of the S-1212B/D Series is pulled down to V_{SS} due to combined resistance (R_{LOW} = 70 kΩ typ.) of the discharge shunt circuit and the feedback resistors, and a load.

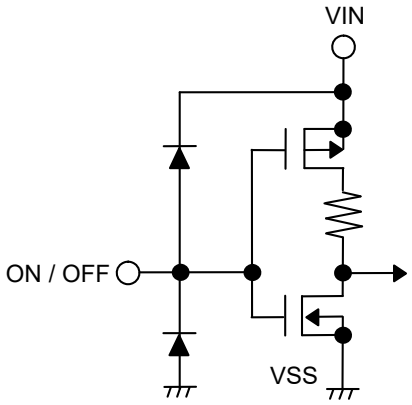

Figure 16

4. Discharge shunt function

The S-1212B/D Series has a built-in discharge shunt circuit to discharge the output capacitance. The output capacitance is discharged as follows so that the VOUT pin reaches the V_{SS} level.

(1) The ON / OFF pin is set to OFF level.
(2) The output transistor is turned off.
(3) The discharge shunt circuit is turned on.
(4) The output capacitor discharges.

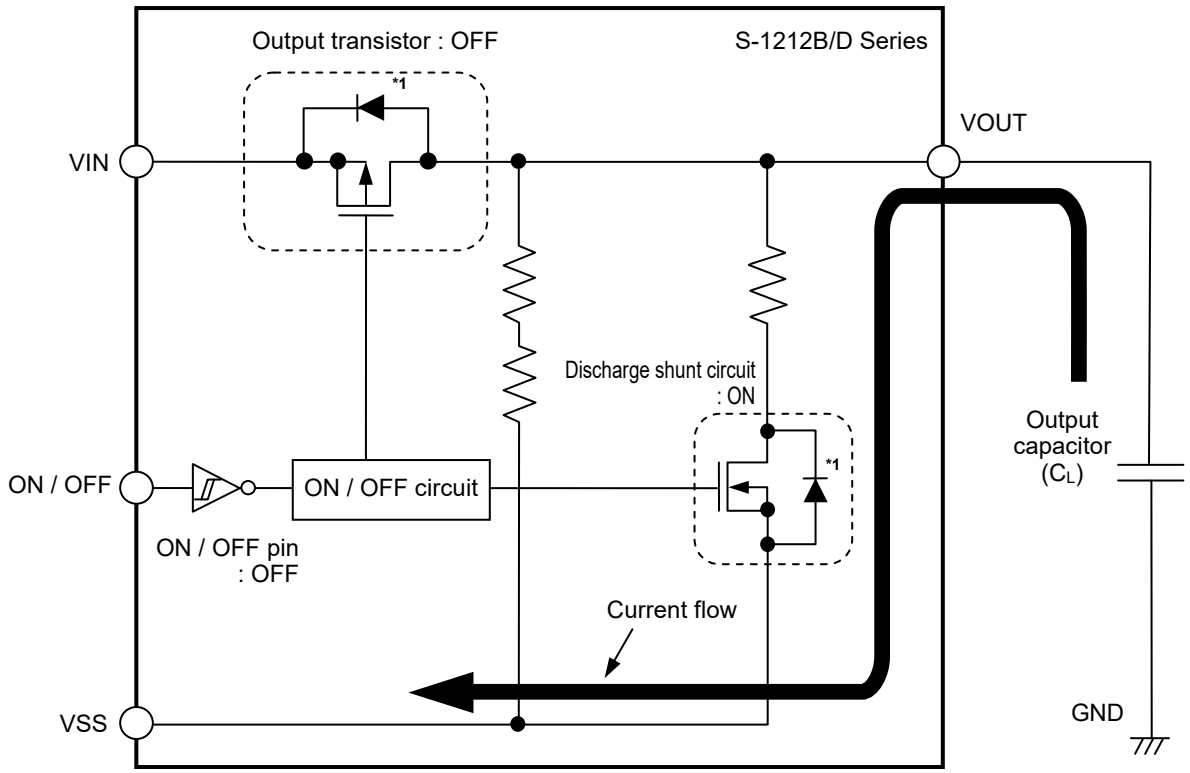

***1**. Parasitic diode

Figure 17

5. Overcurrent protection circuit

The S-1212B/D Series has a built-in overcurrent protection circuit to limit the overcurrent of the output transistor. When the VOUT pin is shorted with the VSS pin, that is, at the time of the output short-circuit, the output current is limited to 120 mA typ. due to the overcurrent protection circuit operation. The S-1212B/D Series restarts regulating when the output transistor is released from the overcurrent status.

Caution 1. This overcurrent protection circuit does not work as for thermal protection. For example, when the output transistor keeps the overcurrent status long at the time of output short-circuit or due to other reasons, pay attention to the conditions of the input voltage and the load current so as not to exceed the power dissipation.

2. Note that any interference may be caused in the output voltage start-up when a load heavier than $\frac{V_{OUT(S)}}{100\ mA}$ is connected.

6. Thermal shutdown circuit

The S-1212B/D Series has a built-in thermal shutdown circuit to limit overheating. When the junction temperature increases to 165°C typ., the thermal shutdown circuit becomes the detection status, and the regulating is stopped. When the junction temperature decreases to 140°C typ., the thermal shutdown circuit becomes the release status, and the regulator is restarted.
If the thermal shutdown circuit becomes the detection status due to self-heating, the regulating is stopped and V_{OUT} decreases. For this reason, the self-heating is limited and the temperature of the IC decreases. The thermal shutdown circuit becomes release status when the temperature of the IC decreases, and the regulating is restarted, thus the self-heating is generated again. Repeating this procedure makes the waveform of V_{OUT} into a pulse-like form. This phenomenon continues unless decreasing either or both of the input voltage and the output current in order to reduce the internal power consumption, or decreasing the ambient temperature. Note that the product may suffer physical damage such as deterioration if the above phenomenon occurs continuously.

Caution 1. When the heat radiation of the application is not in a good condition, the self-heating cannot be limited immediately, and the IC may suffer physical damage. Perform thorough evaluation including the temperature characteristics with an actual application to confirm no problems happen.

2. If a large load current flows during the restart process of regulating after the thermal shutdown circuit changes to the release status from the detection status, the thermal shutdown circuit becomes the detection status again due to self-heating, and a problem may happen in the restart of regulating. A large load current, for example, occurs when charging to the C_L whose capacitance is large.
Perform thorough evaluation including the temperature characteristics with an actual application to select C_L.

Table 15

Thermal Shutdown Circuit	VOUT Pin Voltage
Release: 140°C typ.*1	Constant value*2
Detection: 165°C typ.*1	Pulled down to V_{SS}*3

***1.** Junction temperature
***2.** The constant value is output due to the regulating based on the set output voltage value.
***3.** The VOUT pin voltage is pulled down to V_{SS} due to the feedback resistors (R_s and R_f) and a load.

■ Precautions

- Generally, when a voltage regulator is used under the condition that the load current value is small (0.1 mA or less), the output voltage may increase due to the leakage current of an output transistor.
- Generally, when a voltage regulator is used under the condition that the temperature is high, the output voltage may increase due to the leakage current of an output transistor.
- Generally, when the ON / OFF pin is used under the condition of OFF, the output voltage may increase due to the leakage current of an output transistor.
- Generally, when a voltage regulator is used under the condition that the impedance of the power supply is high, an oscillation may occur. Perform thorough evaluation including the temperature characteristics with an actual application to select C_{IN}.
- Generally, in a voltage regulator, an oscillation may occur depending on the selection of the external parts. The following use conditions are recommended in the S-1212B/D Series, however, perform thorough evaluation including the temperature characteristics with an actual application to select C_{IN} and C_L.

  Input capacitor (C_{IN}): A ceramic capacitor with capacitance of 1.0 μF or more is recommended.
  Output capacitor (C_L): A ceramic capacitor with capacitance of 1.0 μF to 100 μF is recommended.

- Generally, in a voltage regulator, the values of an overshoot and an undershoot in the output voltage vary depending on the variation factors of input voltage start-up, input voltage fluctuation and load fluctuation etc., or the capacitance of C_{IN} or C_L and the value of the equivalent series resistance (ESR), which may cause a problem to the stable operation. Perform thorough evaluation including the temperature characteristics with an actual application to select C_{IN} and C_L.
- Generally, in a voltage regulator, an overshoot may occur in the output voltage momentarily if the input voltage steeply changes when the input voltage is started up or the input voltage fluctuates etc. Perform thorough evaluation including the temperature characteristics with an actual application to confirm no problems happen.
- Generally, in a voltage regulator, if the VOUT pin is steeply shorted with GND, a negative voltage exceeding the absolute maximum ratings may occur in the VOUT pin due to resonance phenomenon of the inductance and the capacitance including C_L on the application. The resonance phenomenon is expected to be weakened by inserting a series resistor into the resonance path, and the negative voltage is expected to be limited by inserting a protection diode between the VOUT pin and the VSS pin.
- If the input voltage is started up steeply under the condition that the capacitance of C_L is large, the thermal shutdown circuit may be in the detection status by self-heating due to the charge current to C_L.
- Make sure of the conditions for the input voltage, output voltage and the load current so that the internal loss does not exceed the power dissipation.
- Do not apply an electrostatic discharge to this IC that exceeds the performance ratings of the built-in electrostatic protection circuit.
- When considering the output current value that the IC is able to output, make sure of the output current value specified in **Table 13** in "■ **Electrical Characteristics**" and footnote ***4** of the table.
- Wiring patterns on the application related to the VIN pin, the VOUT pin and the VSS pin should be designed so that the impedance is low. When mounting C_{IN} between the VIN pin and the VSS pin and C_L between the VOUT pin and the VSS pin, connect the capacitors as close as possible to the respective destination pins of the IC.
- In the package equipped with heat sink of backside, mount the heat sink firmly. Since the heat radiation differs according to the condition of the application, perform thorough evaluation with an actual application to confirm no problems happen.
- ABLIC Inc. claims no responsibility for any disputes arising out of or in connection with any infringement by products including this IC of patents owned by a third party.

■ Characteristics (Typical Data)

1. Output voltage vs. Output current (When load current increases) (Ta = +25°C)

1. 1 V_{OUT} = 2.5 V

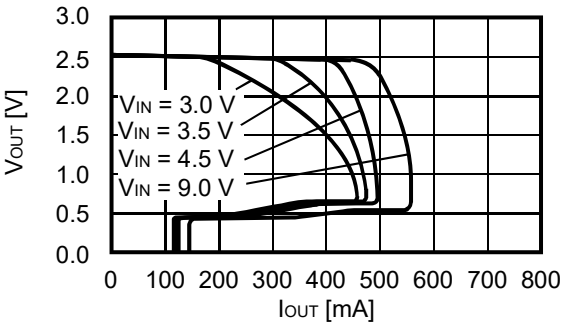

1. 2 V_{OUT} = 5.0 V

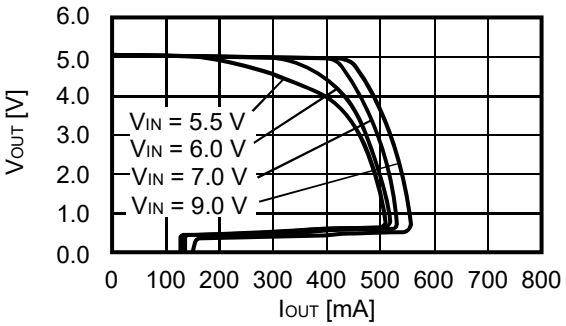

Remark In determining the output current, attention should be paid to the following.

1. The minimum output current value and footnote ***4** of **Table 13** in "■ **Electrical Characteristics**"
2. Power dissipation

2. Output voltage vs. Input voltage (Ta = +25°C)

2. 1 V_{OUT} = 2.5 V

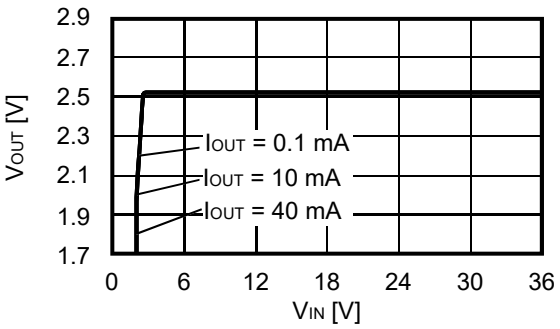

2. 2 V_{OUT} = 5.0 V

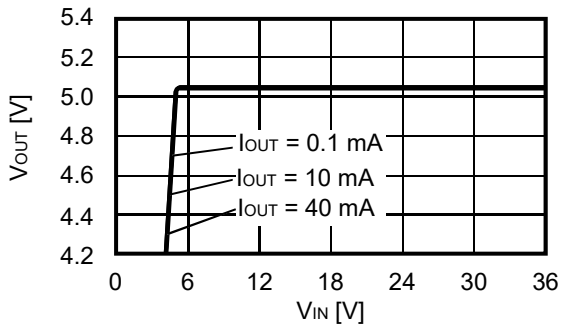

2. 3 V_{OUT} = 16.0 V

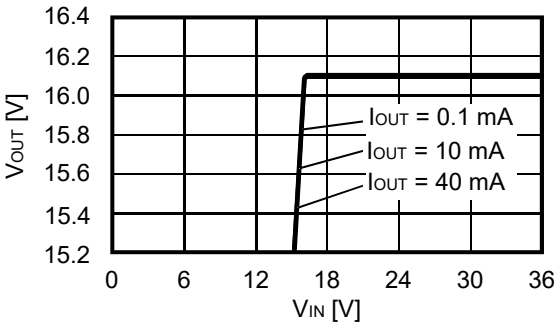

3. Dropout voltage vs. Output current

3. 1 V_{OUT} = 2.5 V

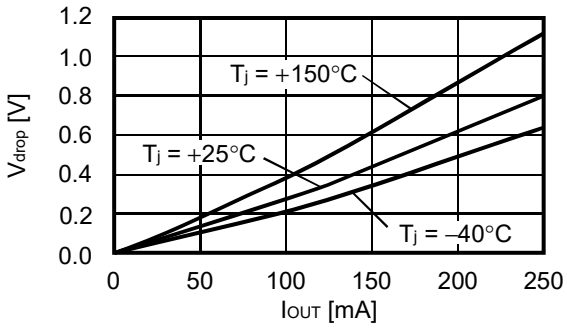

3. 2 V_{OUT} = 5.0 V

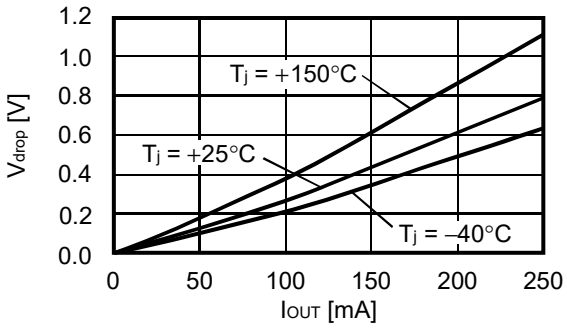

3. 3 V_{OUT} = 16.0 V

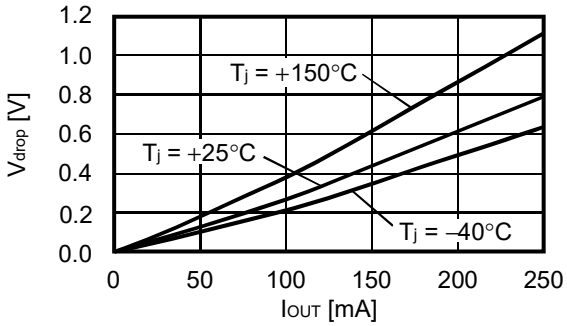

4. Dropout voltage vs. Junction temperature

4. 1 V_{OUT} = 2.5 V

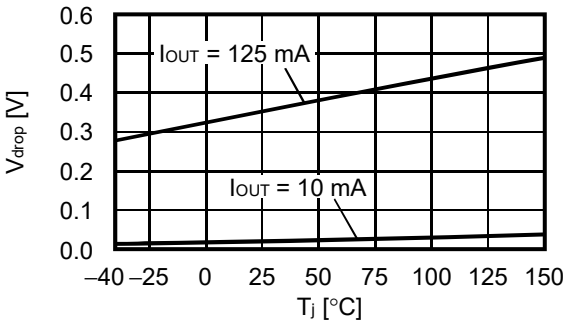

4. 2 V_{OUT} = 5.0 V

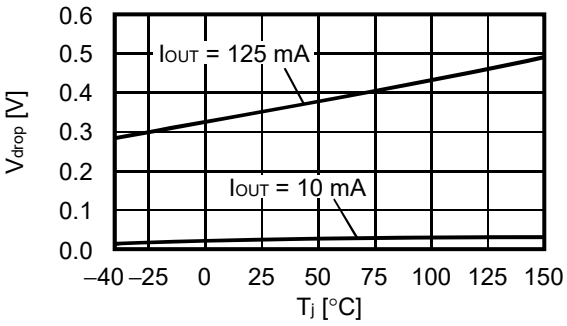

4. 3 V_{OUT} = 16.0 V

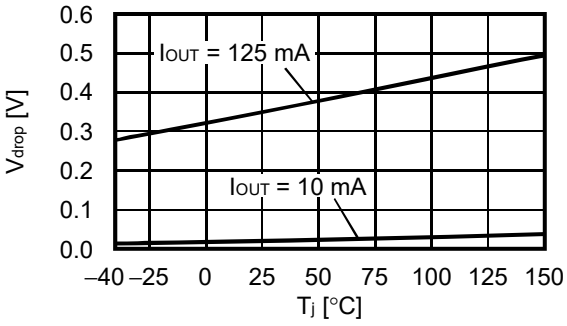

5. Dropout voltage vs. Set output voltage (Ta = +25°C)

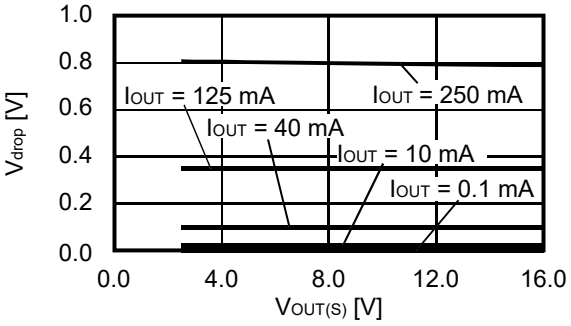

6. Output voltage vs. Junction temperature

6. 1 V_{OUT} = 2.5 V

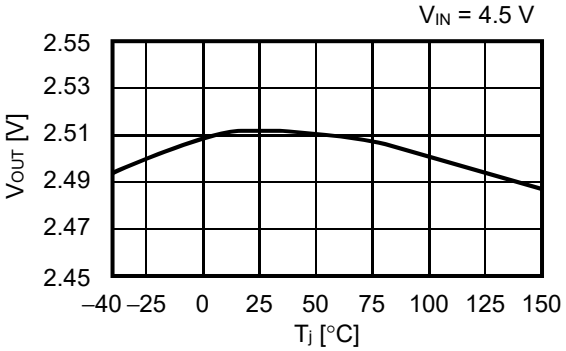

6. 2 V_{OUT} = 5.0 V

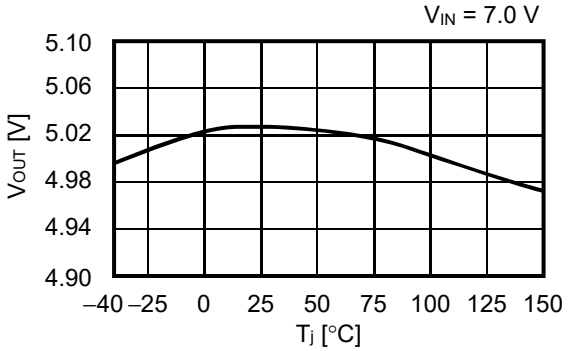

6. 3 V_{OUT} = 16.0 V

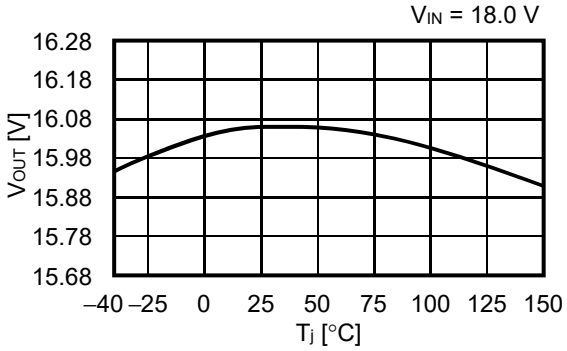

7. Current consumption during operation vs. Input voltage (When ON / OFF pin is ON, no load)

7. 1 V_{OUT} = 2.5 V

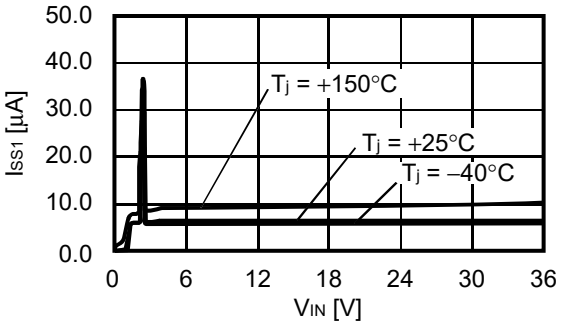

7. 2 V_{OUT} = 5.0 V

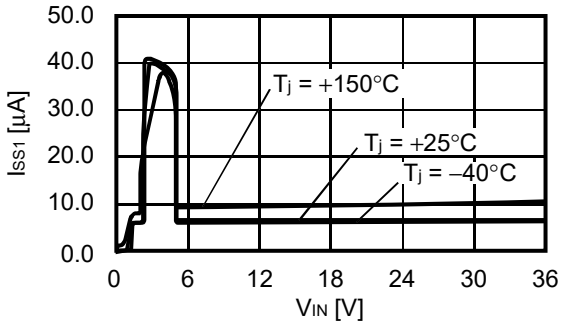

7. 3 V_{OUT} = 16.0 V

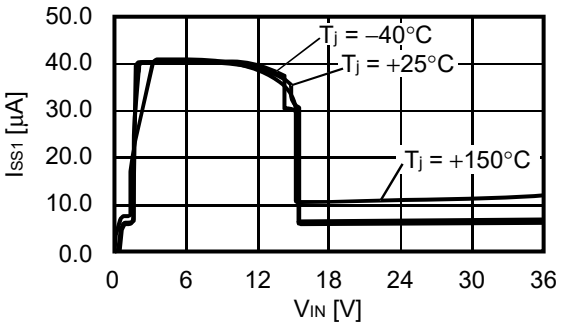

8. Current consumption during operation vs. Junction temperature

8. 1 V_{OUT} = 2.5 V

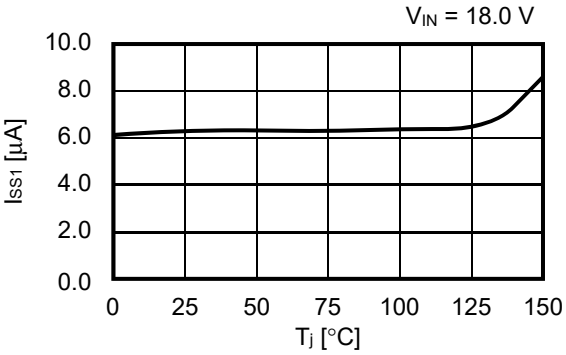

8. 2 V_{OUT} = 5.0 V

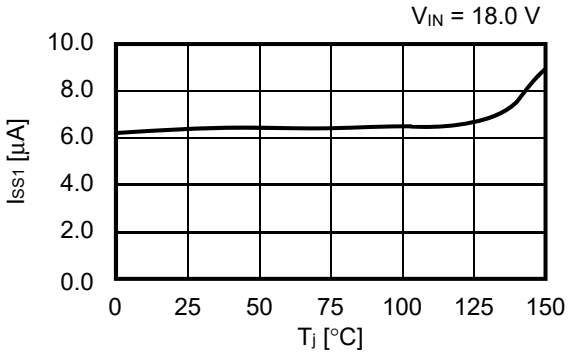

8. 3 V_{OUT} = 16.0 V

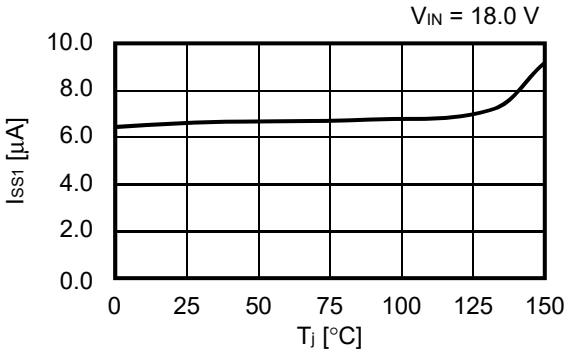

9. Current consumption during operation vs. Output current (Ta = +25°C)

9. 1 V_{OUT} = 2.5 V

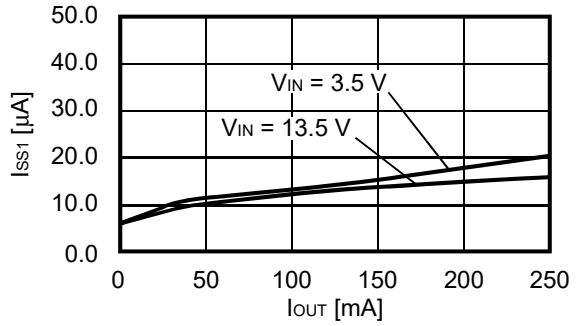

9. 2 V_{OUT} = 5.0 V

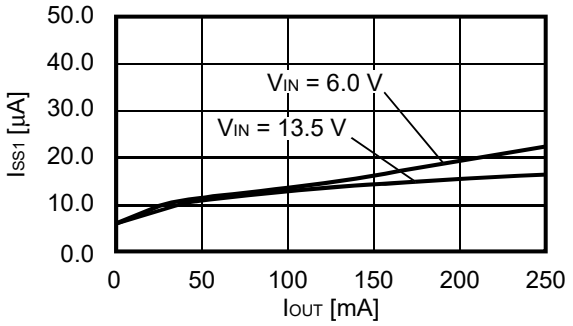

9. 3 V_{OUT} = 16.0 V

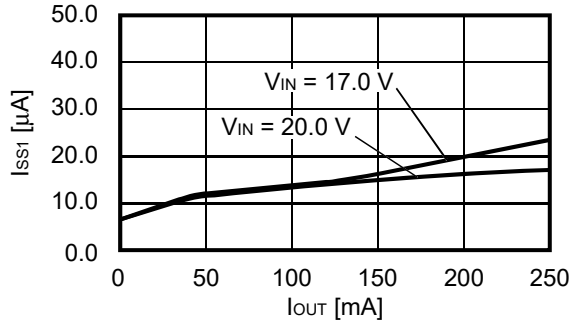

10. Ripple rejection (Ta = +25°C)

10. 1 V_{OUT} = 2.5 V

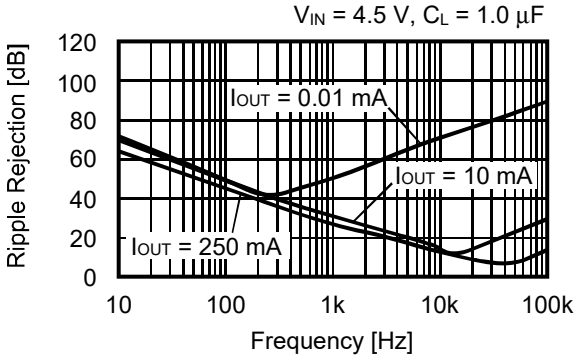

10. 2 V_{OUT} = 5.0 V

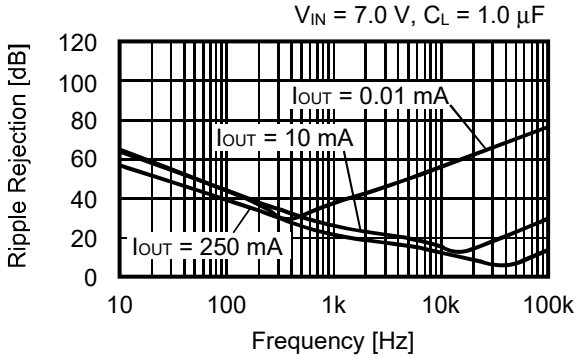

10. 3 V_{OUT} = 16.0 V

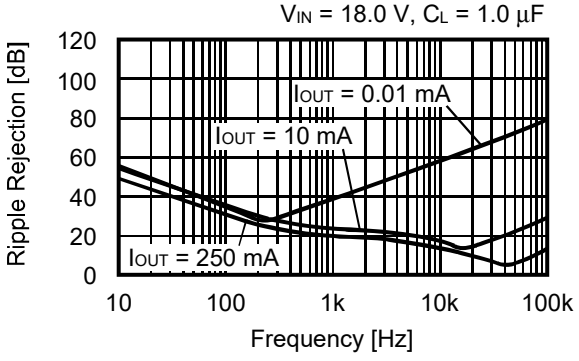

■ Reference Data

1. Characteristics of input transient response (Ta = +25°C)

1. 1 V_{OUT} = 2.5 V

I_{OUT} = 40 mA, C_{IN} = 1.0 µF, V_{IN} = 11.5 V ↔ 13.5 V, t_r = t_f = 5.0 µs

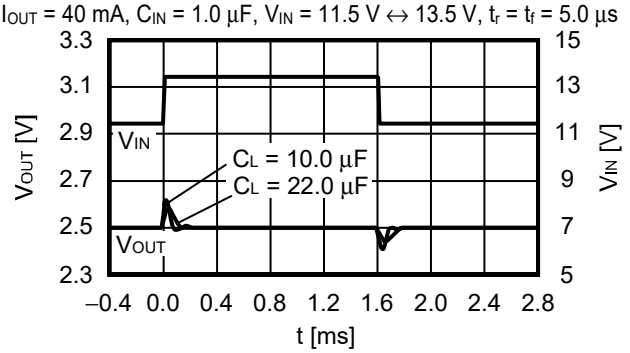

1. 2 V_{OUT} = 5.0 V

I_{OUT} = 40 mA, C_{IN} = 1.0 µF, V_{IN} = 11.5 V ↔ 13.5 V, t_r = t_f = 5.0 µs

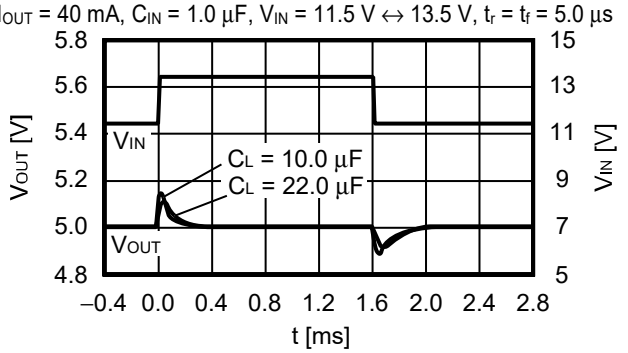

1. 3 V_{OUT} = 16.0 V

I_{OUT} = 40 mA, C_{IN} = 1.0 µF, V_{IN} = 18.0 V ↔ 19.5 V, t_r = t_f = 5.0 µs

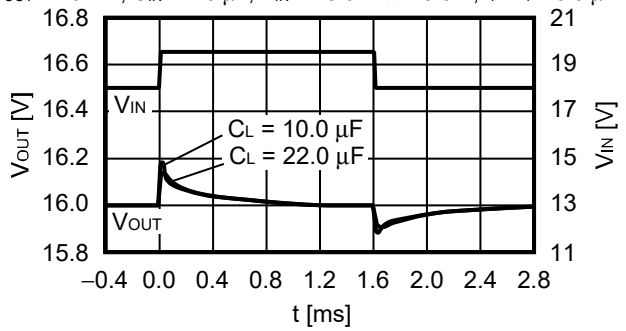

2. Characteristics of load transient response (Ta = +25°C)

2. 1 V_{OUT} = 2.5 V

V_{IN} = 13.5 V, C_{IN} = 1.0 µF, I_{OUT} = 50 mA ↔ 100 mA

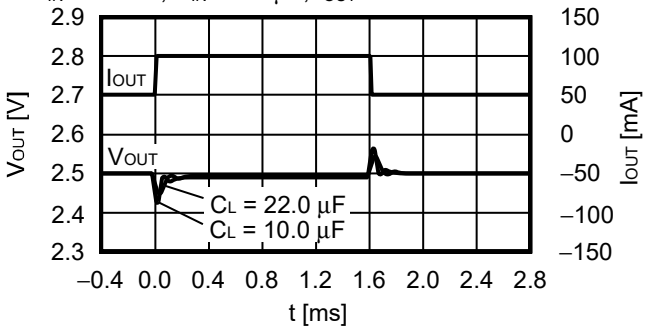

2. 2 V_{OUT} = 5.0 V

V_{IN} = 13.5 V, C_{IN} = 1.0 µF, I_{OUT} = 50 mA ↔ 100 mA

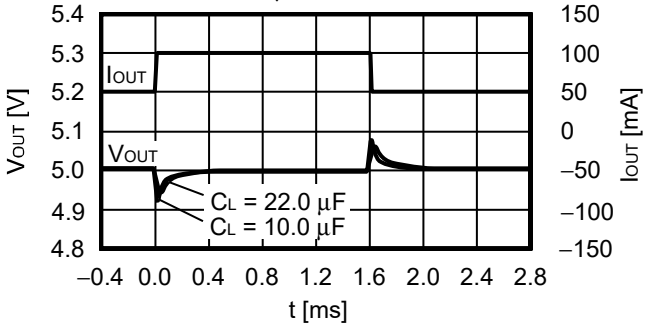

2. 3 V_{OUT} = 16.0 V

V_{IN} = 18.0 V, C_{IN} = 1.0 µF, I_{OUT} = 50 mA ↔ 100 mA

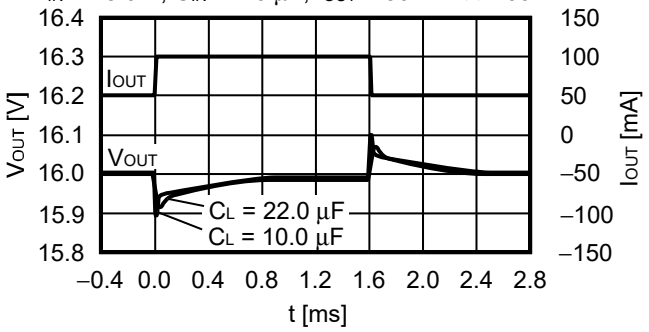

3. Transient response characteristics of ON / OFF pin (Ta = +25°C)

3. 1 V_{OUT} = 2.5 V

V_{IN} = 13.5 V, C_L = 10.0 µF, C_{IN} = 1.0 µF,
I_{OUT} = 125 mA, $V_{ON / OFF}$ = 0 V → 13.5 V

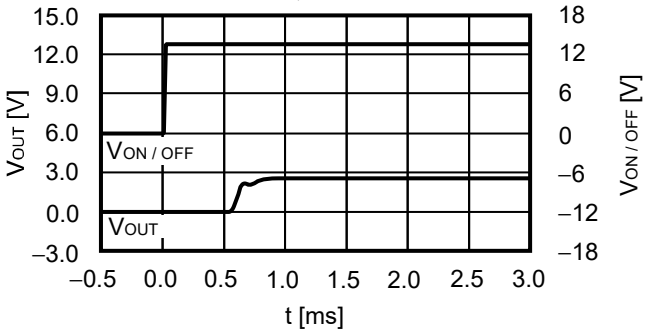

3. 2 V_{OUT} = 5.0 V

V_{IN} = 13.5 V, C_L = 10.0 µF, C_{IN} = 1.0 µF,
I_{OUT} = 125 mA, $V_{ON / OFF}$ = 0 V → 13.5 V

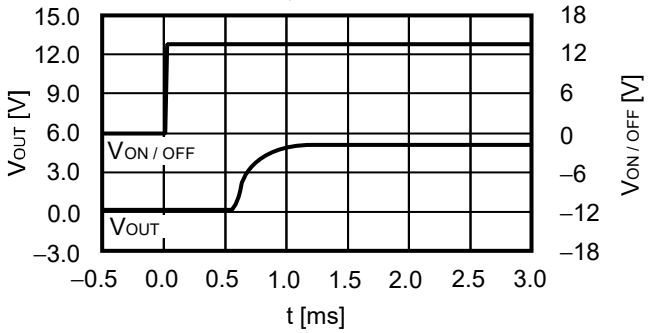

4. Load transient response characteristics dependent on capacitance (Ta = +25°C)

4. 1 V_{OUT} = 5.0 V

V_{IN} = 13.5 V, C_{IN} = 1.0 µF, I_{OUT} = 50 mA → 100 mA

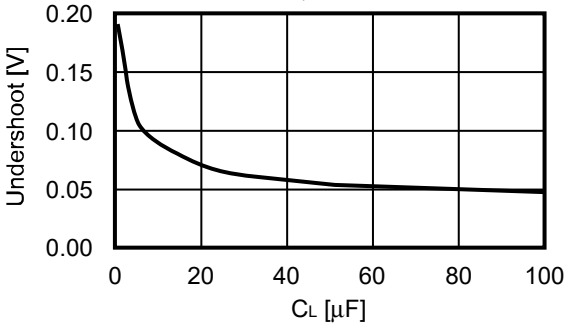

V_{IN} = 13.5 V, C_{IN} = 1.0 µF, I_{OUT} = 100 mA → 50 mA

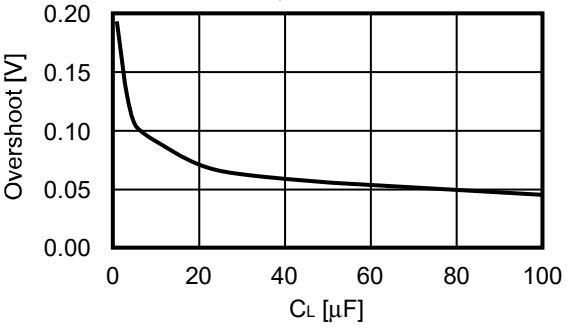

5. Input transient response characteristics dependent on capacitance (Ta = +25°C)

5. 1 V_{OUT} = 5.0 V

V_{IN} = 7.0 V → 12.0 V, t_r = 5.0 µs,
C_{IN} = 1.0 µF, I_{OUT} = 40 mA

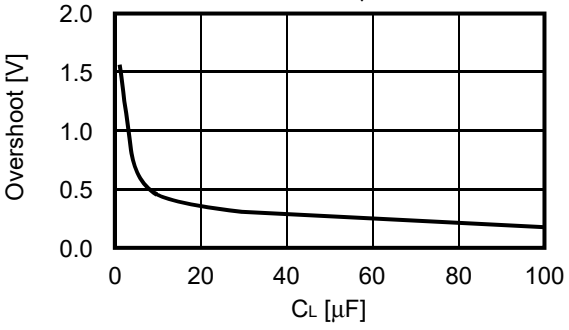

V_{IN} = 12.0 V → 7.0 V, t_r = 5.0 µs,
C_{IN} = 1.0 µF, I_{OUT} = 40 mA

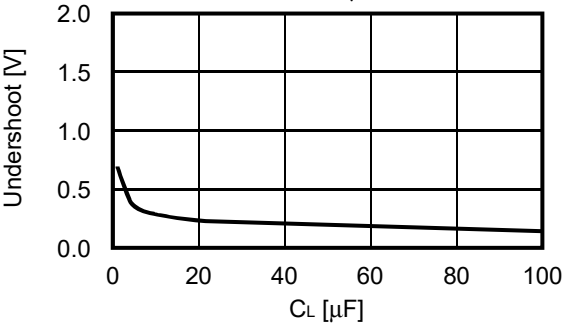

6. Example of equivalent series resistance vs. Output current characteristics (Ta = +25°C)

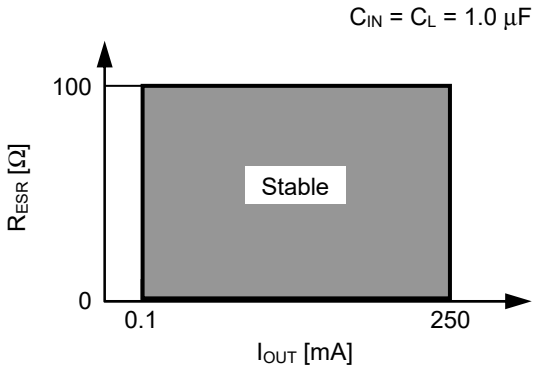

Figure 18

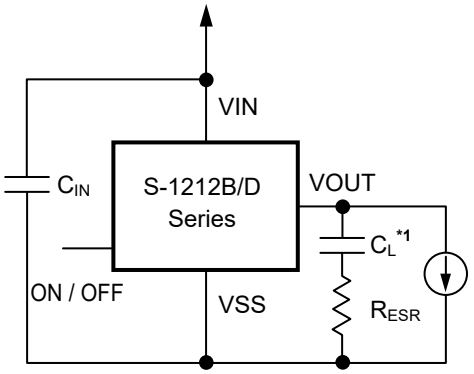

1. C_L: TDK Corporation CGA5L3X8R1H105M (1.0 µF)

Figure 19

■ Power Dissipation

TO-252-5S(A)

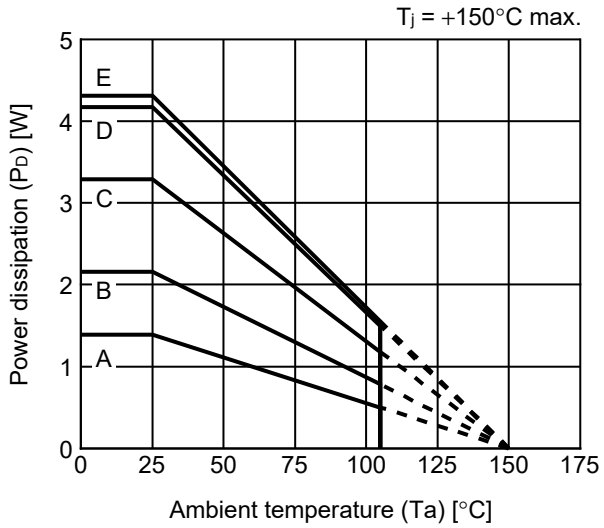

Board	Power Dissipation (P_D)
A	1.39 W
B	2.16 W
C	3.29 W
D	4.17 W
E	4.31 W

HSOP-8A

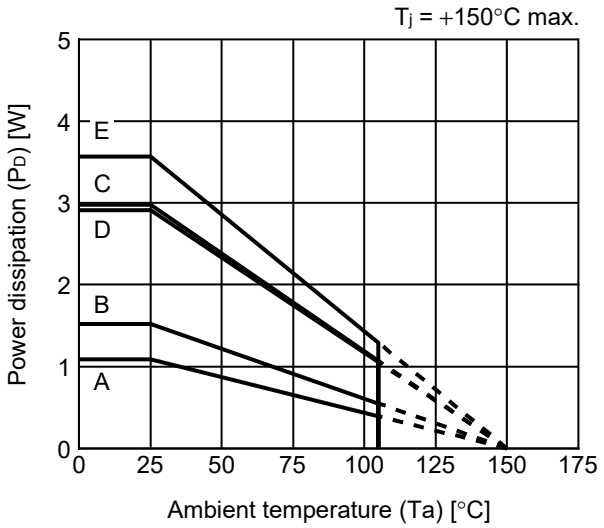

Board	Power Dissipation (P_D)
A	1.09 W
B	1.52 W
C	2.98 W
D	2.91 W
E	3.57 W

HSOP-6

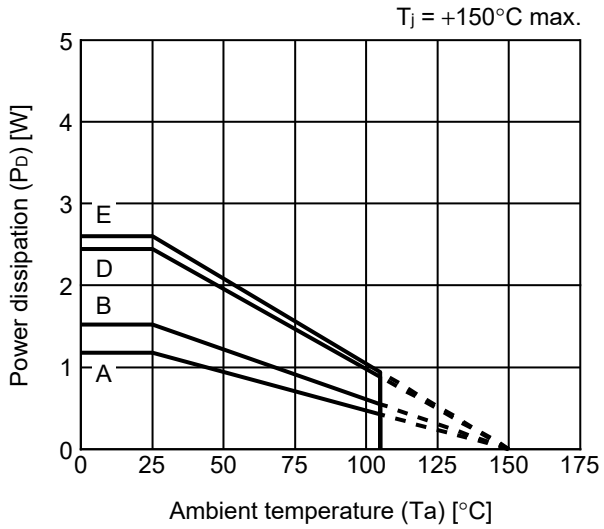

Board	Power Dissipation (P_D)
A	1.18 W
B	1.52 W
C	–
D	2.45 W
E	2.60 W

SOT-89-5

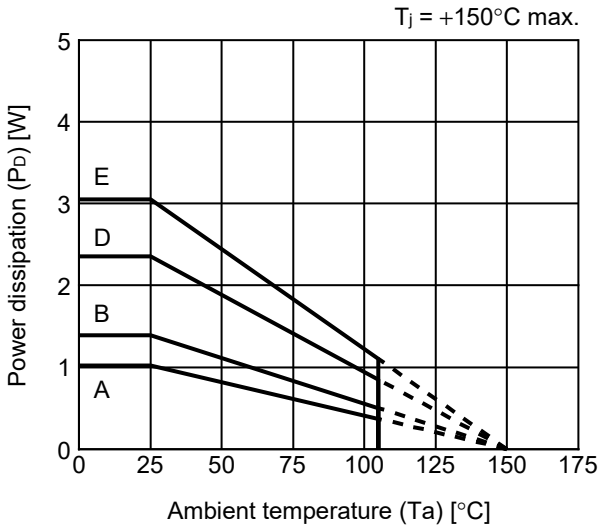

Board	Power Dissipation (P_D)
A	1.02 W
B	1.39 W
C	–
D	2.36 W
E	3.05 W

HTMSOP-8

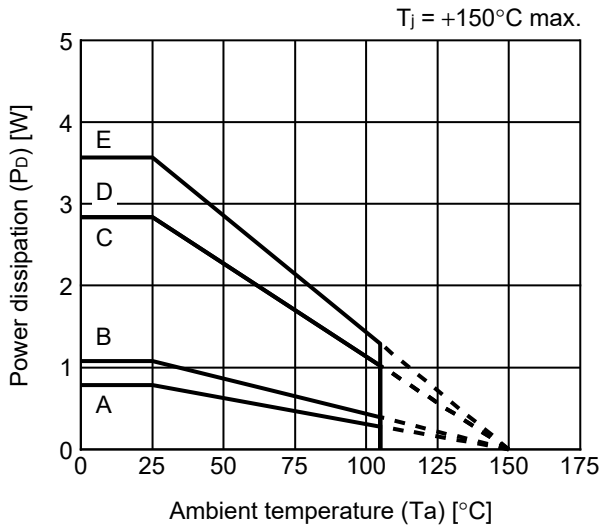

Board	Power Dissipation (P_D)
A	0.78 W
B	1.08 W
C	2.84 W
D	2.84 W
E	3.57 W

SOT-23-5

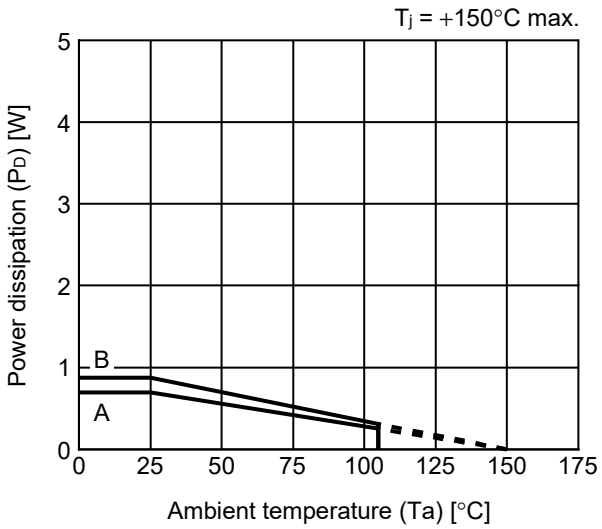

Board	Power Dissipation (P_D)
A	0.69 W
B	0.87 W
C	–
D	–
E	–

TO-252-5S Test Board

(1) Board A

IC Mount Area

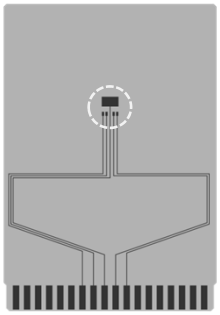

Item		Specification
Size [mm]		114.3 x 76.2 x t1.6
Material		FR-4
Number of copper foil layer		2
Copper foil layer [mm]	1	Land pattern and wiring for testing: t0.070
	2	-
	3	-
	4	74.2 x 74.2 x t0.070
Thermal via		-

(2) Board B

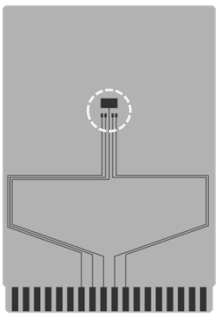

Item		Specification
Size [mm]		114.3 x 76.2 x t1.6
Material		FR-4
Number of copper foil layer		4
Copper foil layer [mm]	1	Land pattern and wiring for testing: t0.070
	2	74.2 x 74.2 x t0.035
	3	74.2 x 74.2 x t0.035
	4	74.2 x 74.2 x t0.070
Thermal via		-

(3) Board C

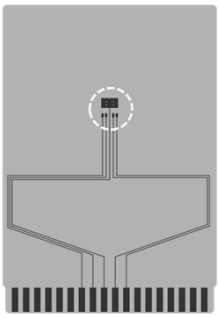

Item		Specification
Size [mm]		114.3 x 76.2 x t1.6
Material		FR-4
Number of copper foil layer		4
Copper foil layer [mm]	1	Land pattern and wiring for testing: t0.070
	2	74.2 x 74.2 x t0.035
	3	74.2 x 74.2 x t0.035
	4	74.2 x 74.2 x t0.070
Thermal via		Number: 4 Diameter: 0.3 mm

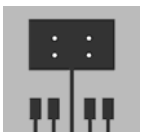

enlarged view

No. TO252-5S-A-Board-SD-1.0

TO-252-5S Test Board

(4) Board D

IC Mount Area

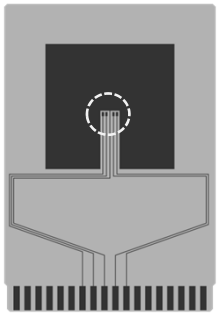

Item		Specification
Size [mm]		114.3 x 76.2 x t1.6
Material		FR-4
Number of copper foil layer		4
Copper foil layer [mm]	1	Pattern for heat radiation: 2000mm^2 t0.070
	2	74.2 x 74.2 x t0.035
	3	74.2 x 74.2 x t0.035
	4	74.2 x 74.2 x t0.070
Thermal via		-

(5) Board E

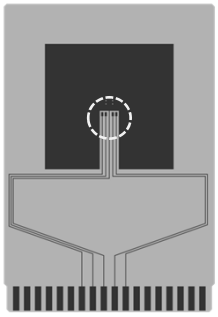

Item		Specification
Size [mm]		114.3 x 76.2 x t1.6
Material		FR-4
Number of copper foil layer		4
Copper foil layer [mm]	1	Pattern for heat radiation: 2000mm^2 t0.070
	2	74.2 x 74.2 x t0.035
	3	74.2 x 74.2 x t0.035
	4	74.2 x 74.2 x t0.070
Thermal via		Number: 4 Diameter: 0.3 mm



enlarged view

No. TO252-5S-A-Board-SD-1.0

HSOP-8A Test Board

(1) Board A

IC Mount Area

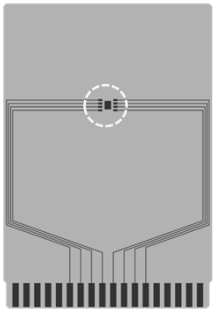

Item		Specification
Size [mm]		114.3 x 76.2 x t1.6
Material		FR-4
Number of copper foil layer		2
Copper foil layer [mm]	1	Land pattern and wiring for testing: t0.070
	2	-
	3	-
	4	74.2 x 74.2 x t0.070
Thermal via		-

(2) Board B

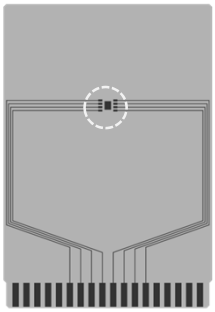

Item		Specification
Size [mm]		114.3 x 76.2 x t1.6
Material		FR-4
Number of copper foil layer		4
Copper foil layer [mm]	1	Land pattern and wiring for testing: t0.070
	2	74.2 x 74.2 x t0.035
	3	74.2 x 74.2 x t0.035
	4	74.2 x 74.2 x t0.070
Thermal via		-

(3) Board C

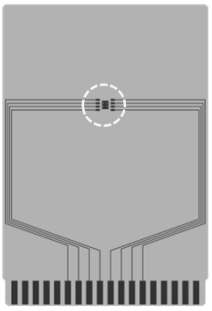

Item		Specification
Size [mm]		114.3 x 76.2 x t1.6
Material		FR-4
Number of copper foil layer		4
Copper foil layer [mm]	1	Land pattern and wiring for testing: t0.070
	2	74.2 x 74.2 x t0.035
	3	74.2 x 74.2 x t0.035
	4	74.2 x 74.2 x t0.070
Thermal via		Number: 4 Diameter: 0.3 mm

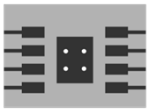

enlarged view

No. HSOP8A-A-Board-SD-1.0

HSOP-8A Test Board

(4) Board D

IC Mount Area

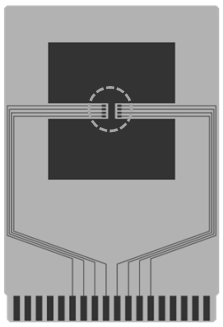

Item		Specification
Size [mm]		114.3 x 76.2 x t1.6
Material		FR-4
Number of copper foil layer		4
Copper foil layer [mm]	1	Pattern for heat radiation: 2000mm2 t0.070
	2	74.2 x 74.2 x t0.035
	3	74.2 x 74.2 x t0.035
	4	74.2 x 74.2 x t0.070
Thermal via		-

(5) Board E

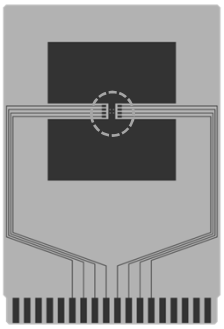

Item		Specification
Size [mm]		114.3 x 76.2 x t1.6
Material		FR-4
Number of copper foil layer		4
Copper foil layer [mm]	1	Pattern for heat radiation: 2000mm^2 t0.070
	2	74.2 x 74.2 x t0.035
	3	74.2 x 74.2 x t0.035
	4	74.2 x 74.2 x t0.070
Thermal via		Number: 4 Diameter: 0.3 mm

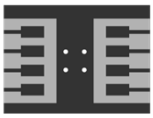

enlarged view

No. HSOP8A-A-Board-SD-1.0

HSOP-6 Test Board

IC Mount Area

(1) Board A

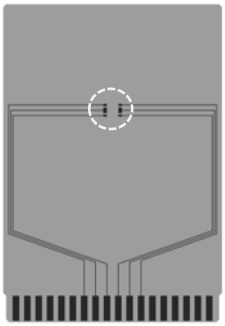

Item		Specification
Size [mm]		114.3 x 76.2 x t1.6
Material		FR-4
Number of copper foil layer		2
Copper foil layer [mm]	1	Land pattern and wiring for testing: t0.070
	2	-
	3	-
	4	74.2 x 74.2 x t0.070
Thermal via		-

(2) Board B

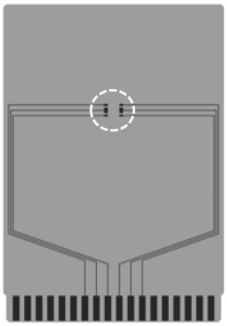

Item		Specification
Size [mm]		114.3 x 76.2 x t1.6
Material		FR-4
Number of copper foil layer		4
Copper foil layer [mm]	1	Land pattern and wiring for testing: t0.070
	2	74.2 x 74.2 x t0.035
	3	74.2 x 74.2 x t0.035
	4	74.2 x 74.2 x t0.070
Thermal via		-

(3) Board D

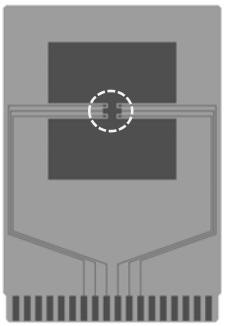

Item		Specification
Size [mm]		114.3 x 76.2 x t1.6
Material		FR-4
Number of copper foil layer		4
Copper foil layer [mm]	1	Pattern for heat radiation: 2000mm^2 t0.070
	2	74.2 x 74.2 x t0.035
	3	74.2 x 74.2 x t0.035
	4	74.2 x 74.2 x t0.070
Thermal via		-

(4) Board E

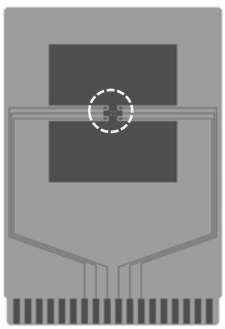

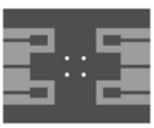

enlarged view

Item		Specification
Size [mm]		114.3 x 76.2 x t1.6
Material		FR-4
Number of copper foil layer		4
Copper foil layer [mm]	1	Pattern for heat radiation: 2000mm^2 t0.070
	2	74.2 x 74.2 x t0.035
	3	74.2 x 74.2 x t0.035
	4	74.2 x 74.2 x t0.070
Thermal via		Number: 4 Diameter: 0.3 mm

No. HSOP6-A-Board-SD-1.0

SOT-89-5 Test Board

IC Mount Area

(1) Board A

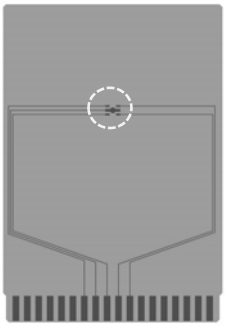

Item		Specification
Size [mm]		114.3 x 76.2 x t1.6
Material		FR-4
Number of copper foil layer		2
Copper foil layer [mm]	1	Land pattern and wiring for testing: t0.070
	2	-
	3	-
	4	74.2 x 74.2 x t0.070
Thermal via		-

(2) Board B

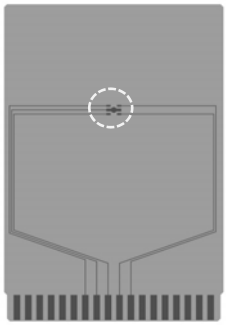

Item		Specification
Size [mm]		114.3 x 76.2 x t1.6
Material		FR-4
Number of copper foil layer		4
Copper foil layer [mm]	1	Land pattern and wiring for testing: t0.070
	2	74.2 x 74.2 x t0.035
	3	74.2 x 74.2 x t0.035
	4	74.2 x 74.2 x t0.070
Thermal via		-

(3) Board D

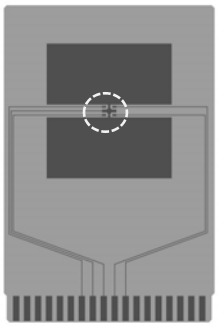

Item		Specification
Size [mm]		114.3 x 76.2 x t1.6
Material		FR-4
Number of copper foil layer		4
Copper foil layer [mm]	1	Pattern for heat radiation: 2000mm^2 t0.070
	2	74.2 x 74.2 x t0.035
	3	74.2 x 74.2 x t0.035
	4	74.2 x 74.2 x t0.070
Thermal via		-

(4) Board E

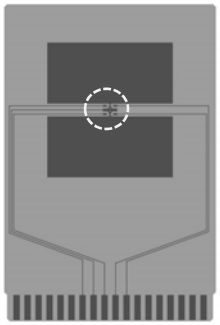



enlarged view

Item		Specification
Size [mm]		114.3 x 76.2 x t1.6
Material		FR-4
Number of copper foil layer		4
Copper foil layer [mm]	1	Pattern for heat radiation: 2000mm^2 t0.070
	2	74.2 x 74.2 x t0.035
	3	74.2 x 74.2 x t0.035
	4	74.2 x 74.2 x t0.070
Thermal via		Number: 4 Diameter: 0.3 mm

No. SOT895-A-Board-SD-1.0

HTMSOP-8 Test Board

IC Mount Area

(1) Board A

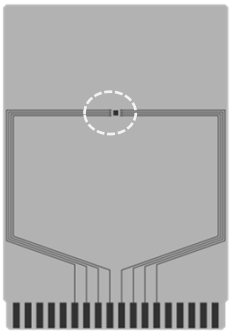

Item		Specification
Size [mm]		114.3 x 76.2 x t1.6
Material		FR-4
Number of copper foil layer		2
Copper foil layer [mm]	1	Land pattern and wiring for testing: t0.070
	2	-
	3	-
	4	74.2 x 74.2 x t0.070
Thermal via		-

(2) Board B

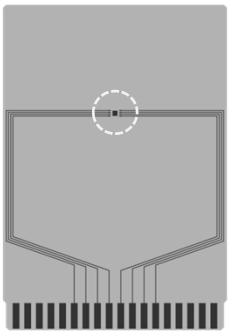

Item		Specification
Size [mm]		114.3 x 76.2 x t1.6
Material		FR-4
Number of copper foil layer		4
Copper foil layer [mm]	1	Land pattern and wiring for testing: t0.070
	2	74.2 x 74.2 x t0.035
	3	74.2 x 74.2 x t0.035
	4	74.2 x 74.2 x t0.070
Thermal via		-

(3) Board C

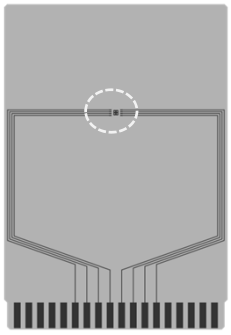



enlarged view

Item		Specification
Size [mm]		114.3 x 76.2 x t1.6
Material		FR-4
Number of copper foil layer		4
Copper foil layer [mm]	1	Land pattern and wiring for testing: t0.070
	2	74.2 x 74.2 x t0.035
	3	74.2 x 74.2 x t0.035
	4	74.2 x 74.2 x t0.070
Thermal via		Number: 4 Diameter: 0.3 mm

No. HTMSOP8-A-Board-SD-1.0

HTMSOP-8 Test Board

IC Mount Area

(4) Board D

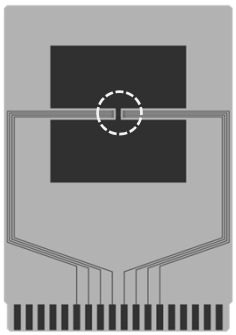



enlarged view

Item		Specification
Size [mm]		114.3 x 76.2 x t1.6
Material		FR-4
Number of copper foil layer		4
Copper foil layer [mm]	1	Pattern for heat radiation: 2000mm^2 t0.070
	2	74.2 x 74.2 x t0.035
	3	74.2 x 74.2 x t0.035
	4	74.2 x 74.2 x t0.070
Thermal via		-

(5) Board E

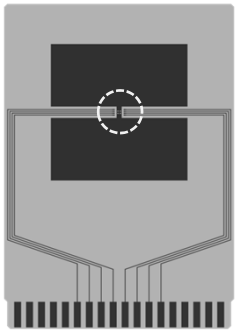



enlarged view

Item		Specification
Size [mm]		114.3 x 76.2 x t1.6
Material		FR-4
Number of copper foil layer		4
Copper foil layer [mm]	1	Pattern for heat radiation: 2000mm^2 t0.070
	2	74.2 x 74.2 x t0.035
	3	74.2 x 74.2 x t0.035
	4	74.2 x 74.2 x t0.070
Thermal via		Number: 4 Diameter: 0.3 mm

No. HTMSOP8-A-Board-SD-1.0

SOT-23-3/3S/5/6 Test Board

IC Mount Area

(1) Board A

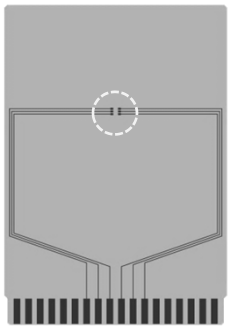

Item		Specification
Size [mm]		114.3 x 76.2 x t1.6
Material		FR-4
Number of copper foil layer		2
Copper foil layer [mm]	1	Land pattern and wiring for testing: t0.070
	2	-
	3	-
	4	74.2 x 74.2 x t0.070
Thermal via		-

(2) Board B

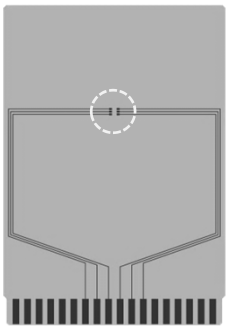

Item		Specification
Size [mm]		114.3 x 76.2 x t1.6
Material		FR-4
Number of copper foil layer		4
Copper foil layer [mm]	1	Land pattern and wiring for testing: t0.070
	2	74.2 x 74.2 x t0.035
	3	74.2 x 74.2 x t0.035
	4	74.2 x 74.2 x t0.070
Thermal via		-

No. SOT23x-A-Board-SD-2.0

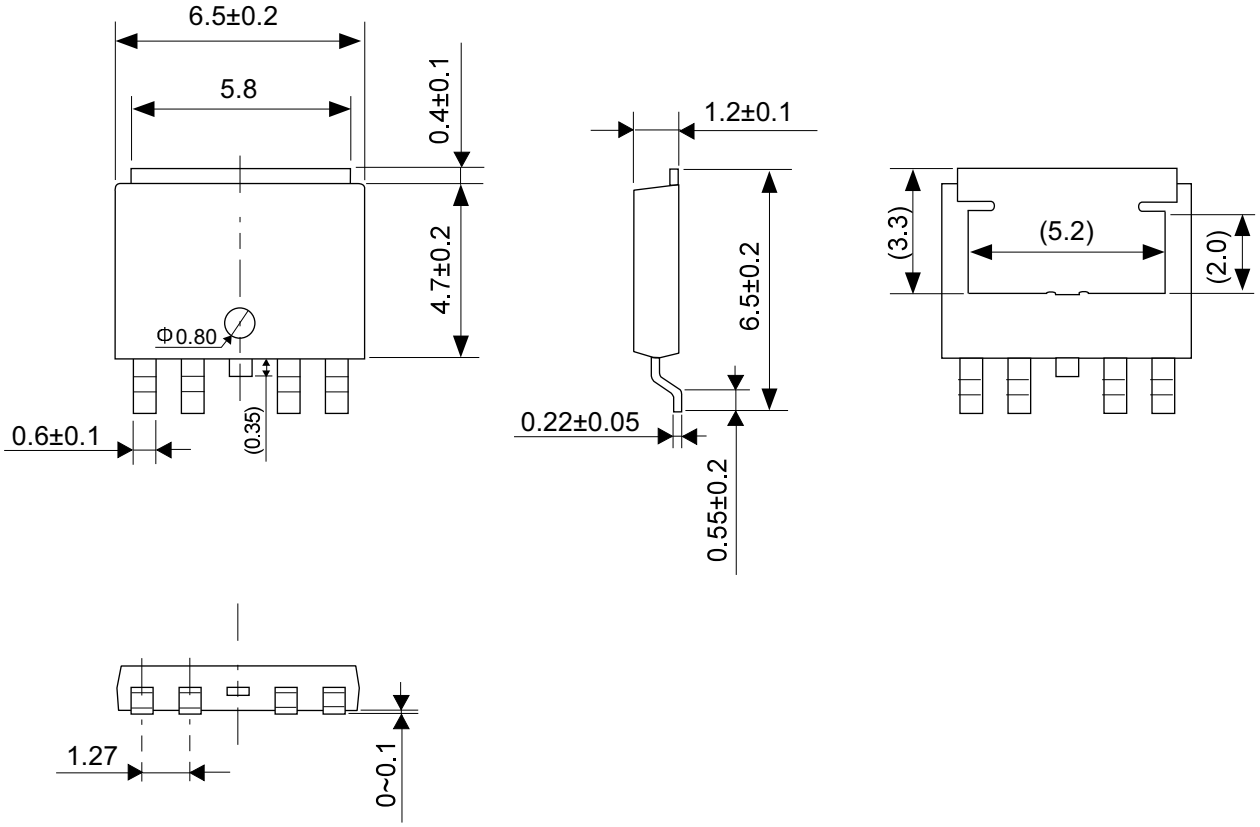

No. VA005-A-P-SD-2.0

TITLE	TO-252-5S-A-PKG Dimensions
No.	VA005-A-P-SD-2.0
ANGLE	
UNIT	mm
ABLIC Inc.	

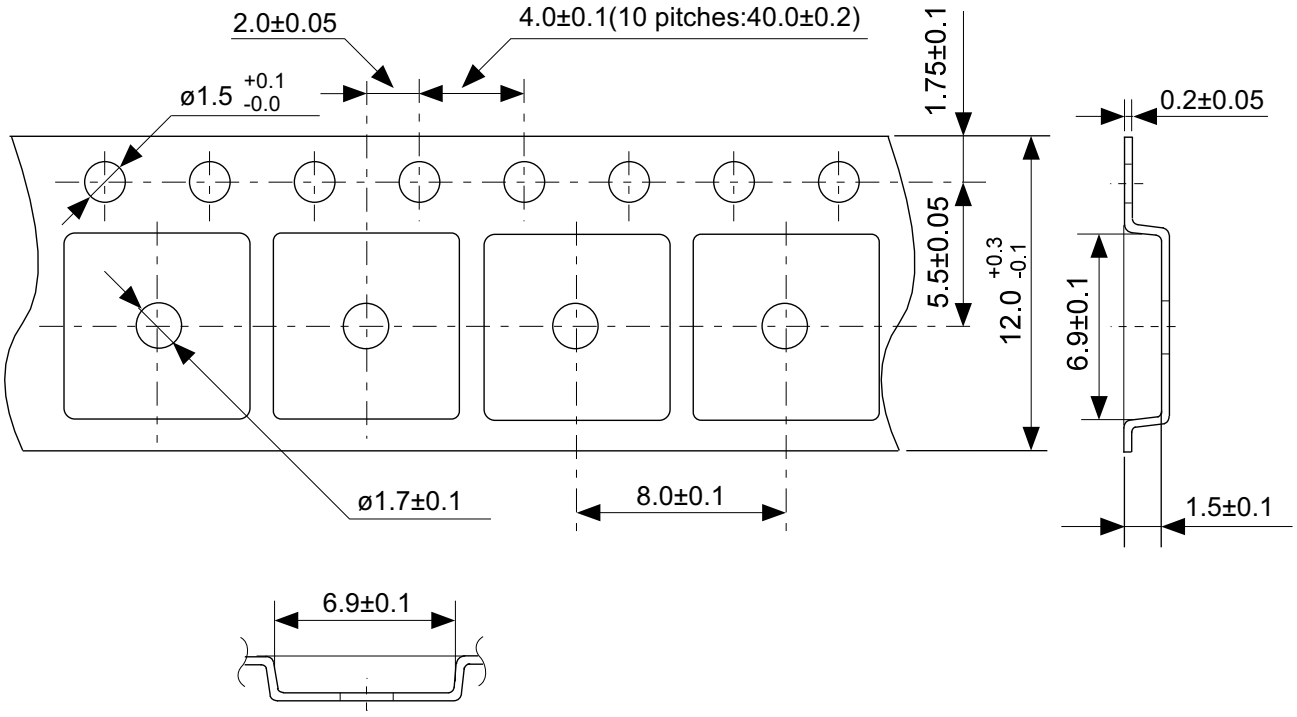

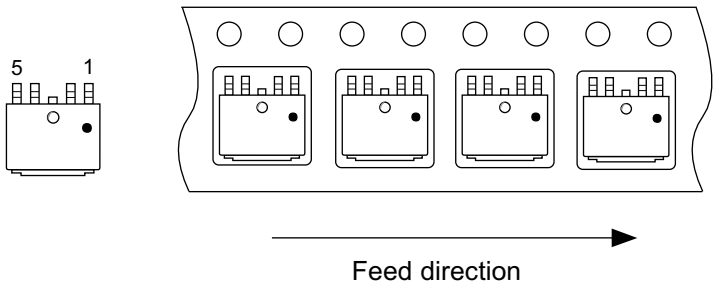

No. VA005-A-C-SD-1.0

TITLE	TO-252-5S-A-Carrier Tape
No.	VA005-A-C-SD-1.0
ANGLE	
UNIT	mm
ABLIC Inc.	

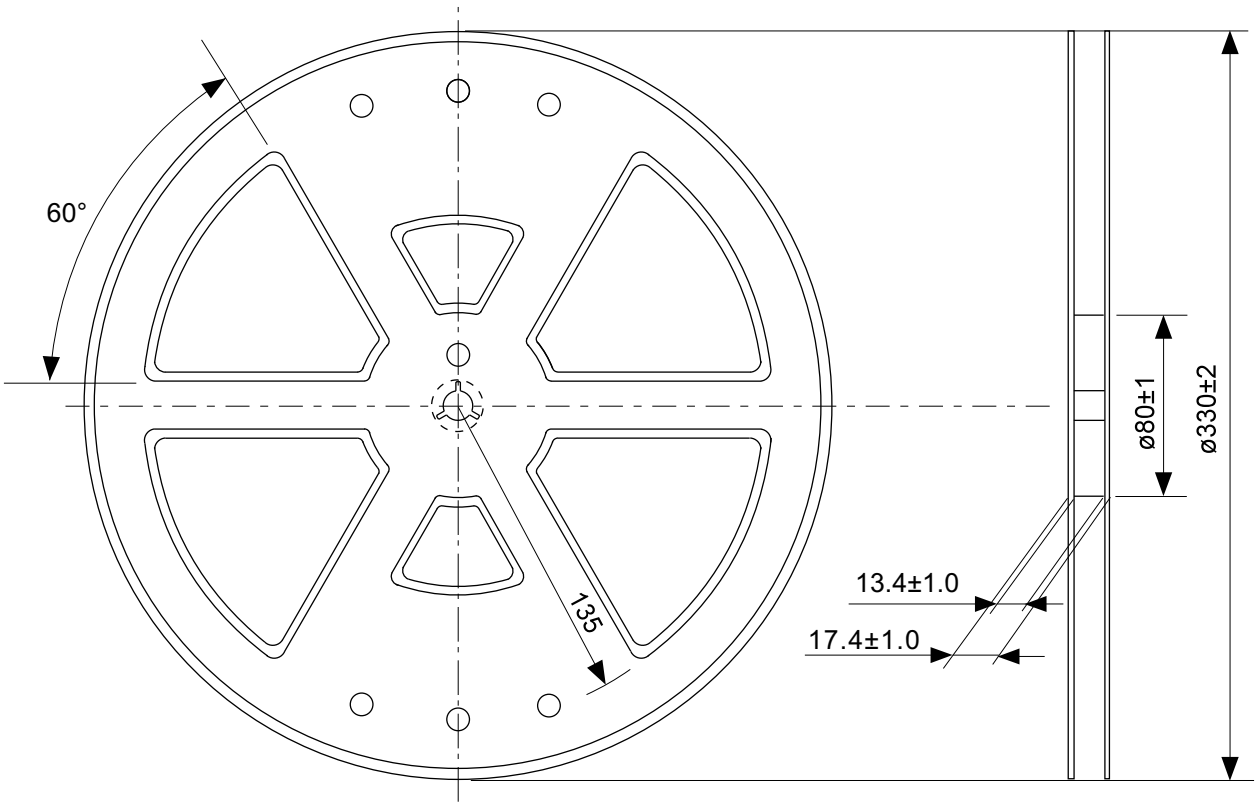

Enlarged drawing in the central part

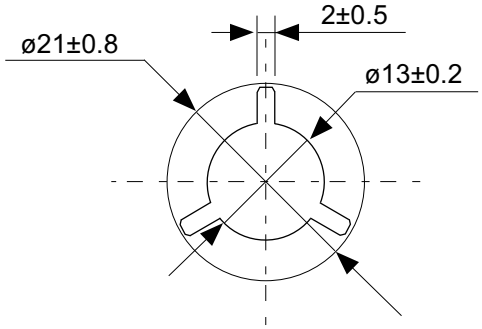

No. VA005-A-R-SD-1.1

TITLE	TO-252-5S-A-Reel		
No.	VA005-A-R-SD-1.1		
ANGLE		QTY.	4,000
UNIT	mm		
ABLIC Inc.			

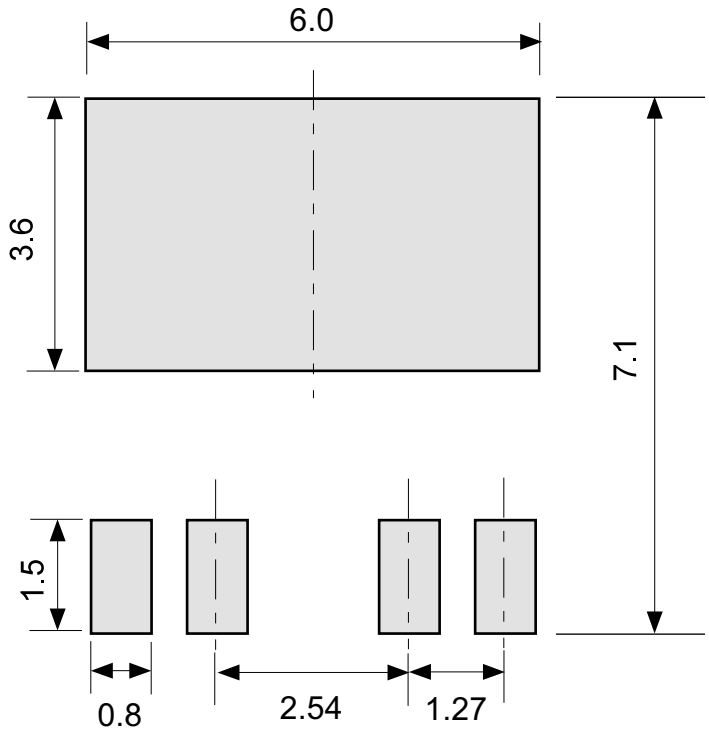

No. VA005-A-L-SD-1.0

TITLE	TO-252-5S-A -Land Recommendation
No.	VA005-A-L-SD-1.0
ANGLE	
UNIT	mm
ABLIC Inc.	

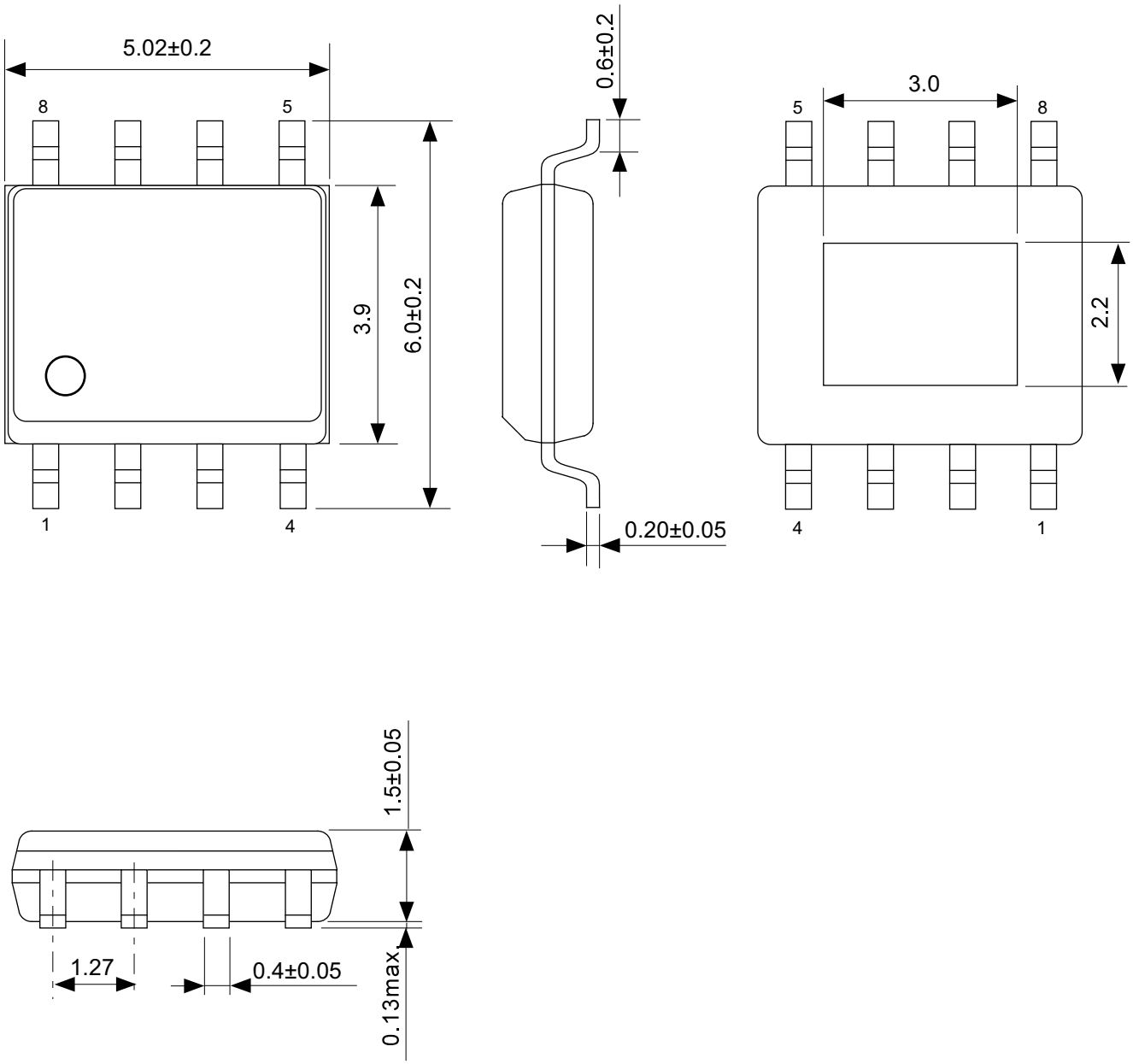

No. FH008-A-P-SD-2.0

TITLE	HSOP8A-A-PKG Dimensions
No.	FH008-A-P-SD-2.0
ANGLE	
UNIT	mm
ABLIC Inc.	

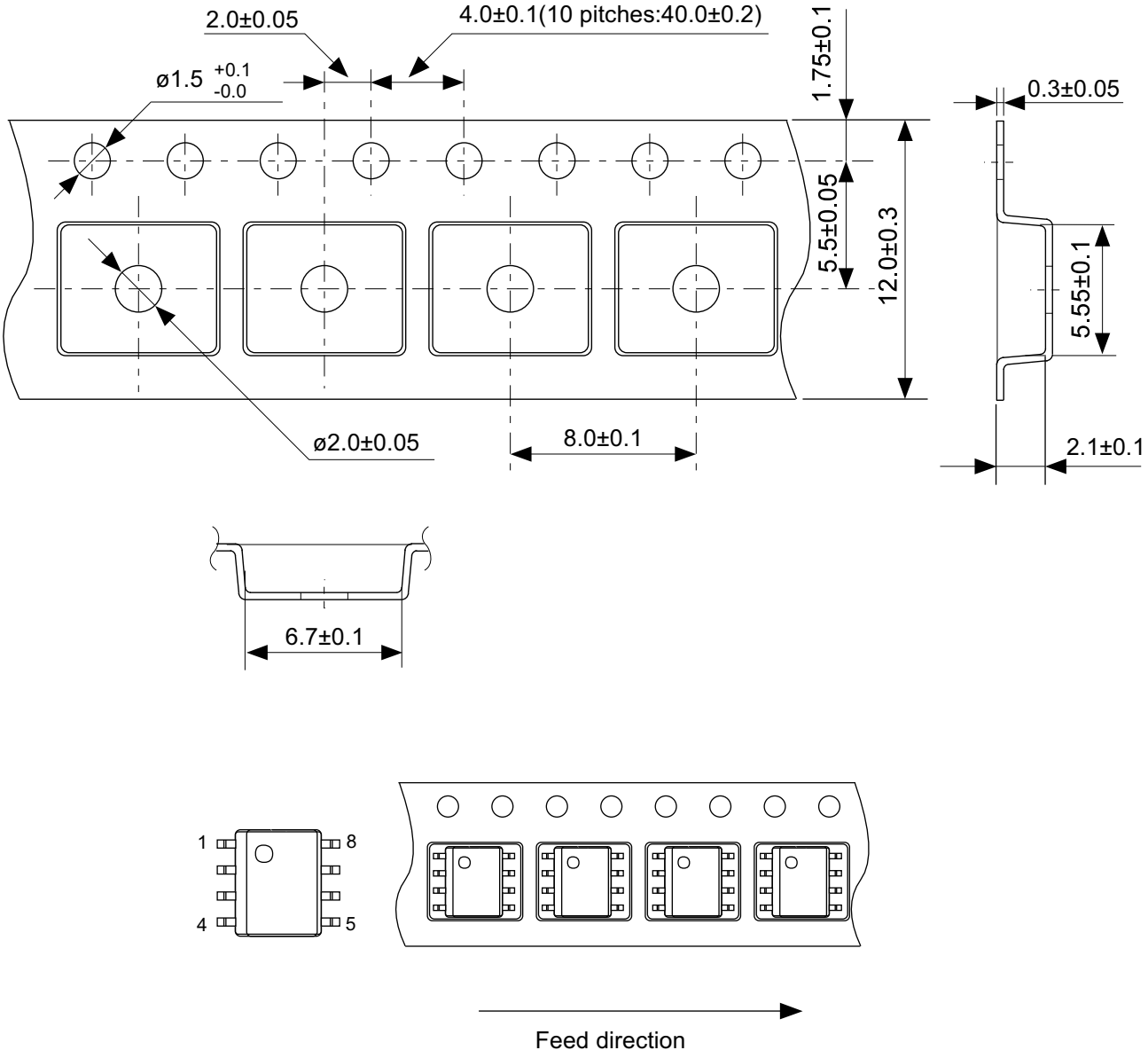

No. FH008-A-C-SD-1.0

TITLE	HSOP8A-A-Carrier Tape
No.	FH008-A-C-SD-1.0
ANGLE	
UNIT	mm
ABLIC Inc.	

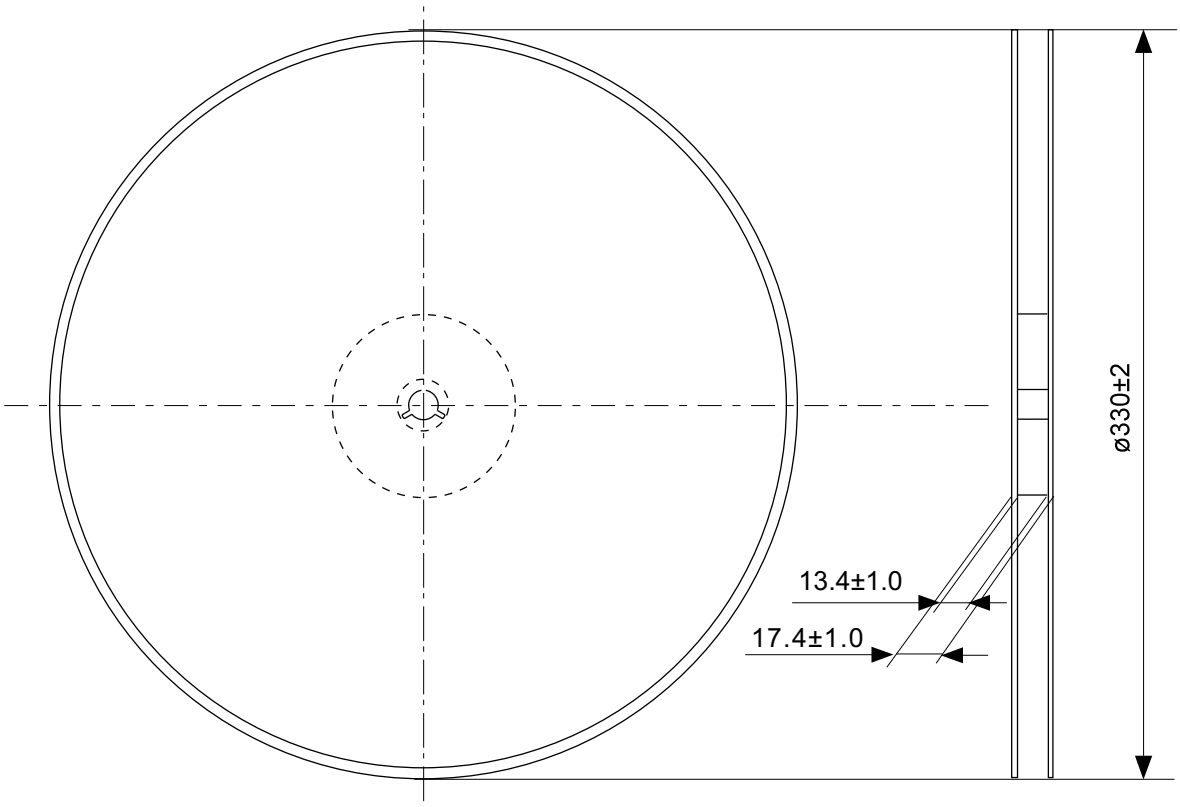

Enlarged drawing in the central part

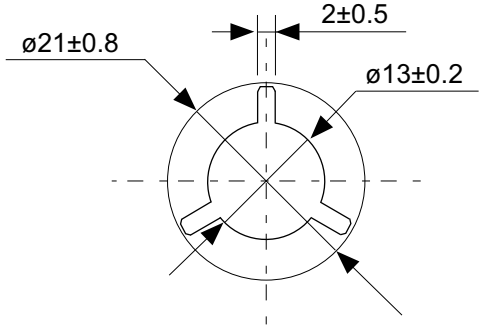

No. FH008-A-R-SD-1.1

TITLE	HSOP8A-A-Reel		
No.	FH008-A-R-SD-1.1		
ANGLE		QTY.	4,000
UNIT	mm		
ABLIC Inc.			

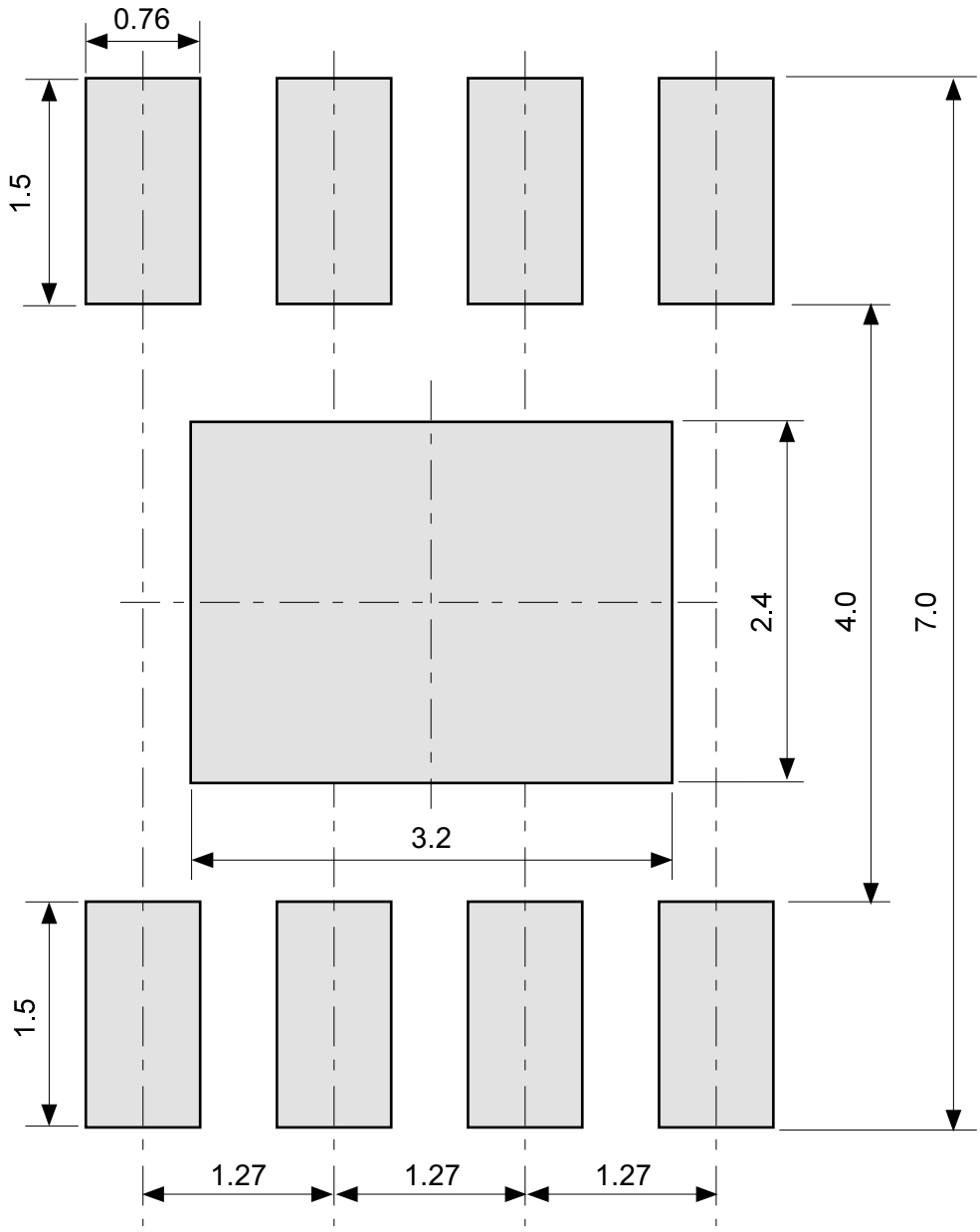

No. FH008-A-L-SD-1.0

TITLE	HSOP8A-A -Land Recommendation
No.	FH008-A-L-SD-1.0
ANGLE	
UNIT	mm
ABLIC Inc.	

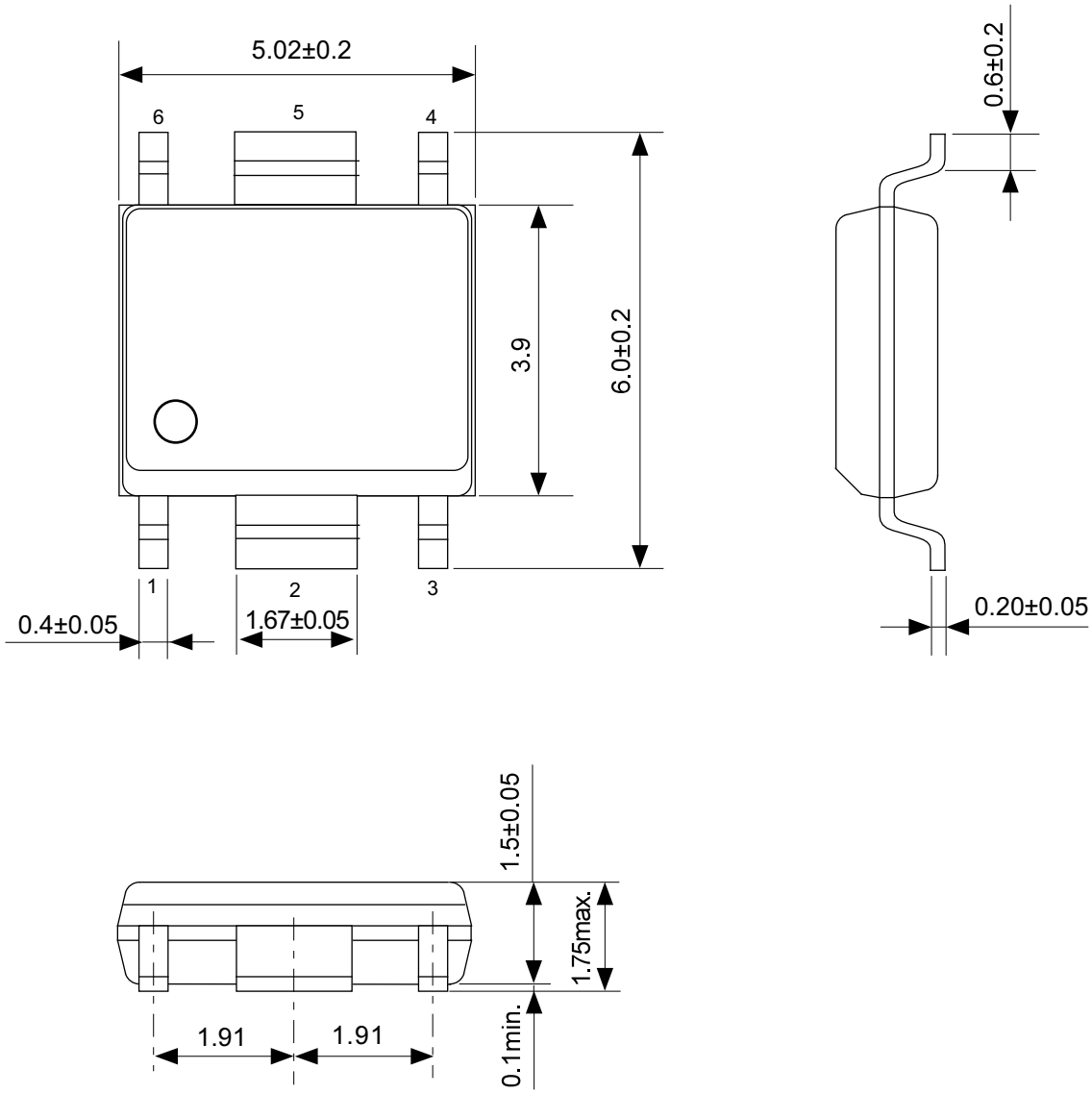

No. FH006-A-P-SD-2.1

TITLE	HSOP6-A-PKG Dimensions
No.	FH006-A-P-SD-2.1
ANGLE	
UNIT	mm
ABLIC Inc.	

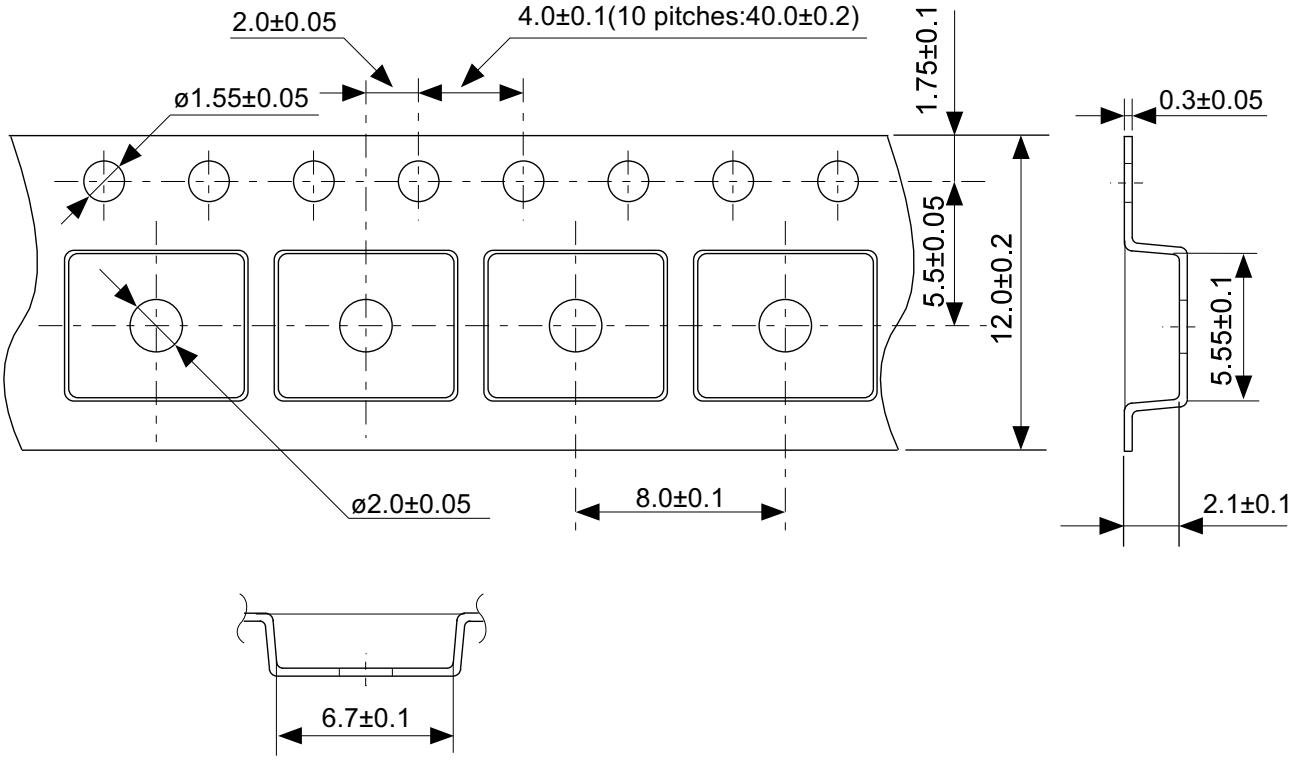

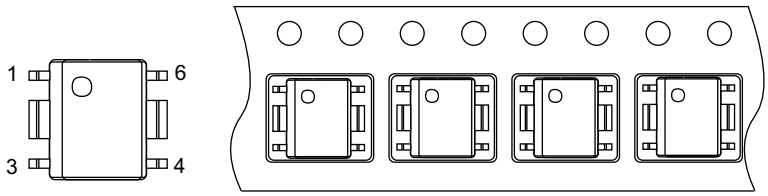

Feed direction

No. FH006-A-C-SD-2.0

TITLE	HSOP6-A-Carrier Tape
No.	FH006-A-C-SD-2.0
ANGLE	
UNIT	mm
ABLIC Inc.	

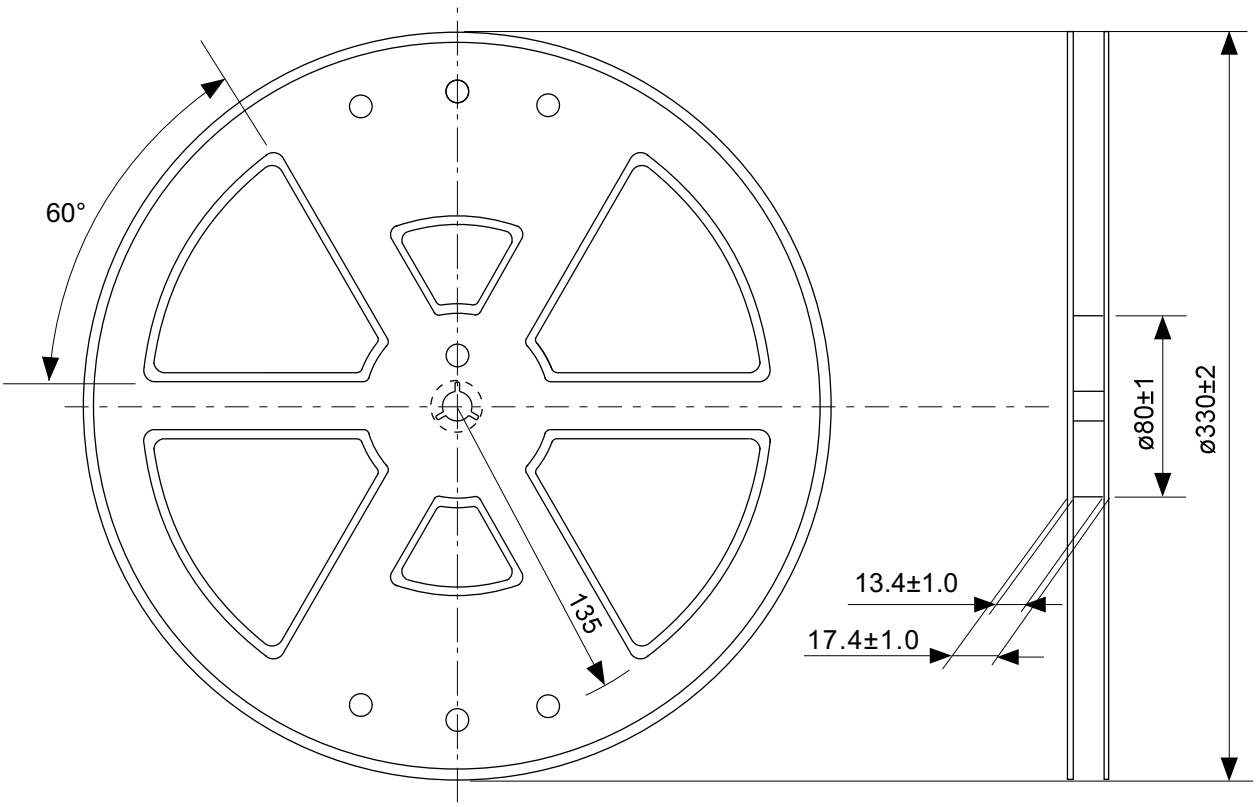

Enlarged drawing in the central part

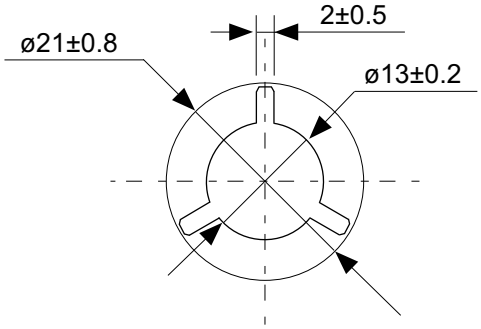

No. FH006-A-R-S1-2.0

TITLE	HSOP6-A-Reel		
No.	FH006-A-R-S1-2.0		
ANGLE		QTY.	4,000
UNIT	mm		
	ABLIC Inc.		

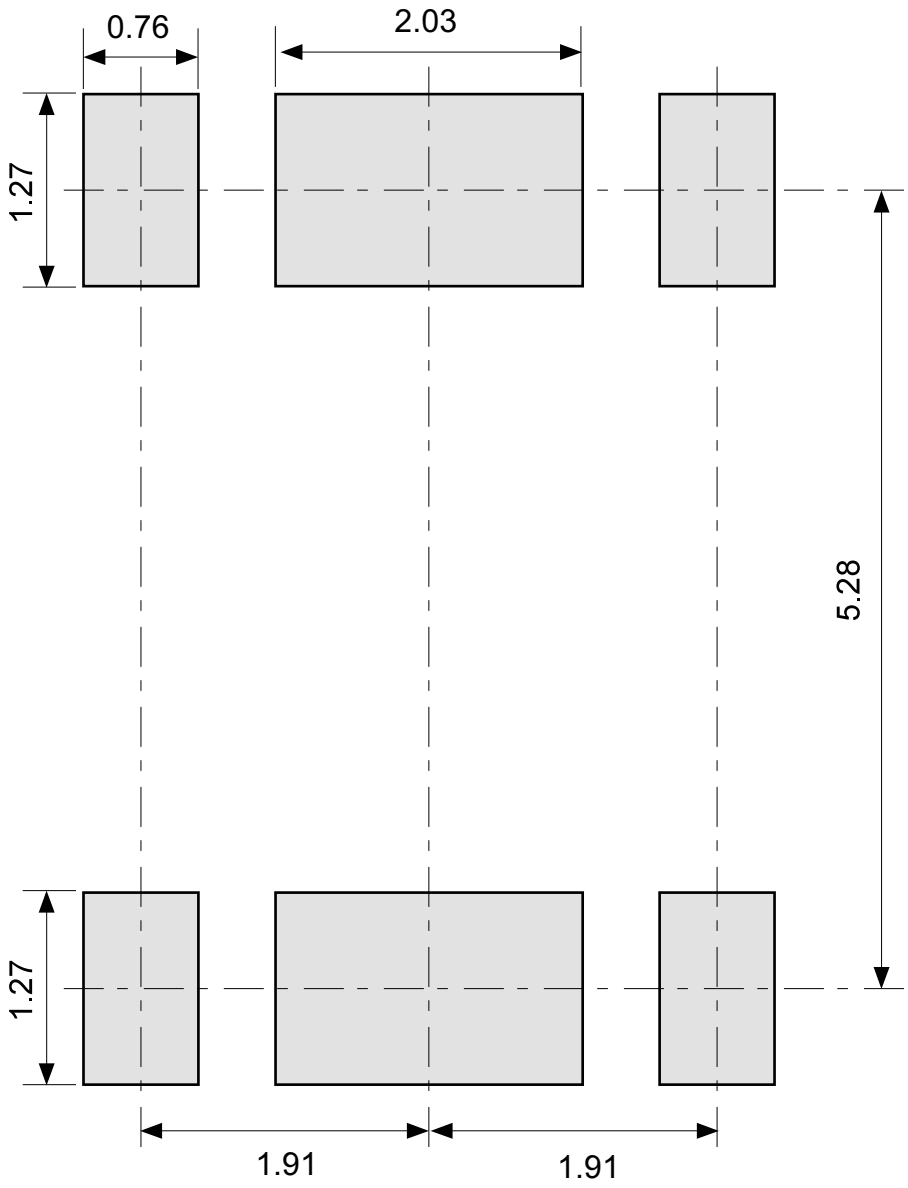

No. FH006-A-L-SD-2.0

TITLE	HSOP6-A -Land Recommendation
No.	FH006-A-L-SD-2.0
ANGLE	
UNIT	mm
ABLIC Inc.	

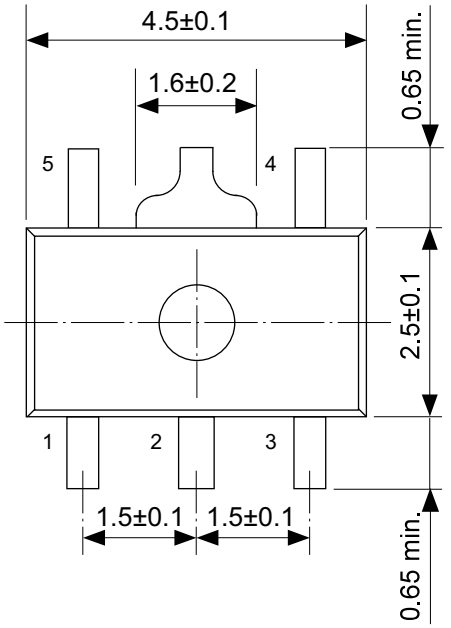

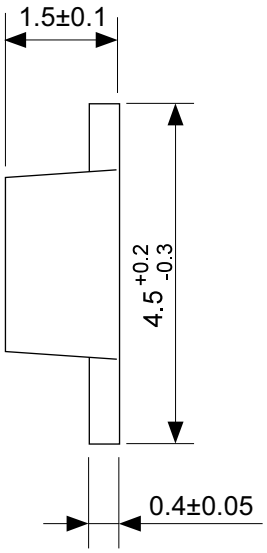

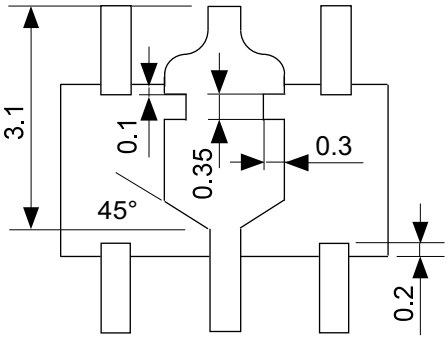

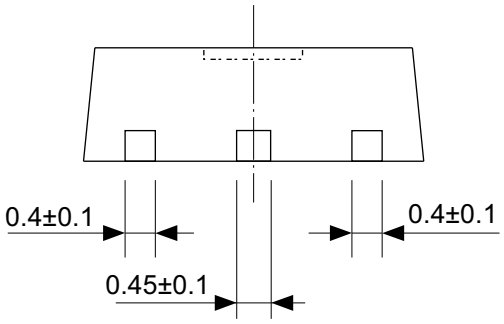

No. UP005-A-P-SD-2.0

TITLE	SOT895-A-PKG Dimensions
No.	UP005-A-P-SD-2.0
ANGLE	
UNIT	mm

ABLIC Inc.

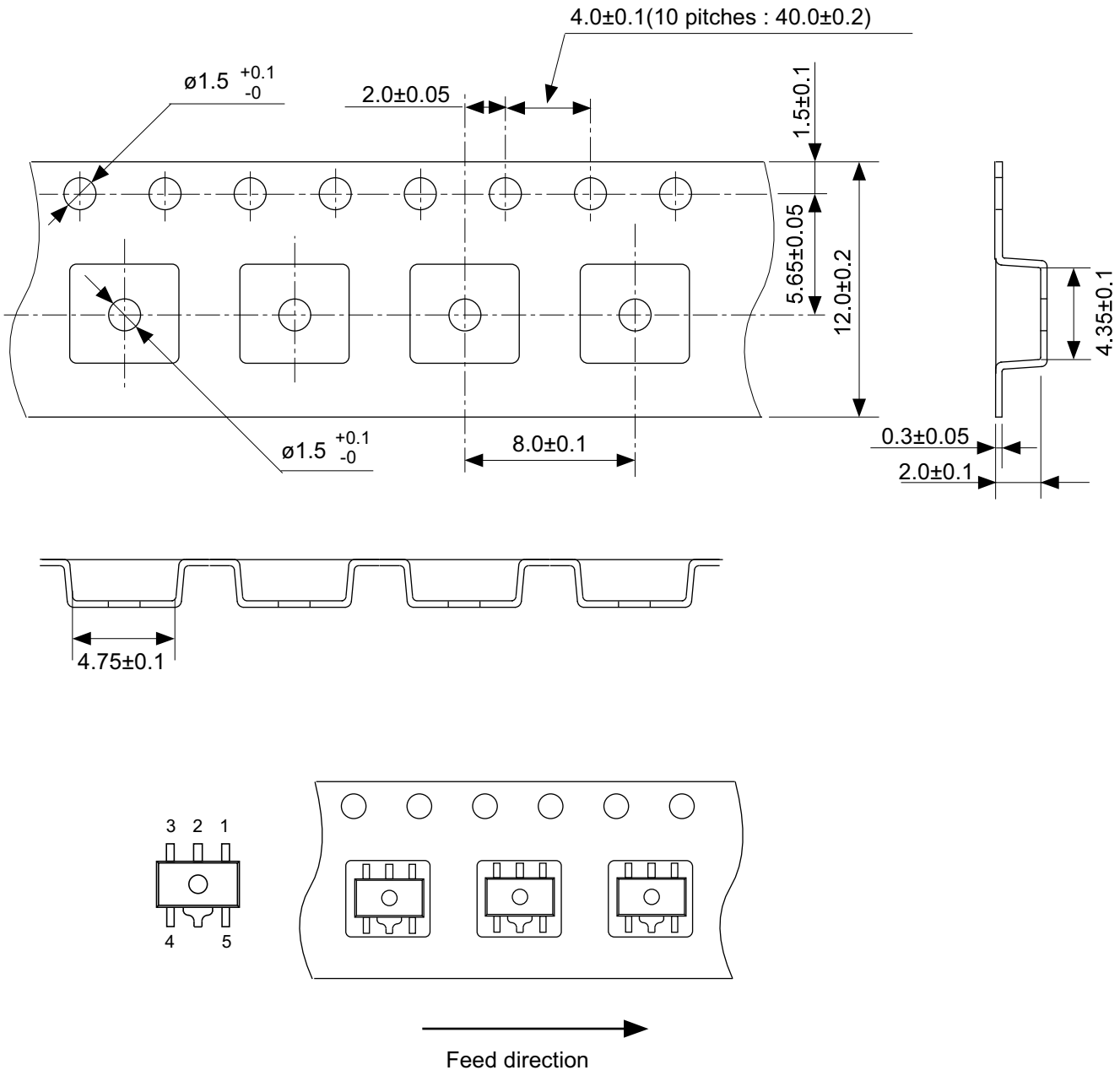

No. UP005-A-C-SD-2.0

TITLE	SOT895-A-Carrier Tape
No.	UP005-A-C-SD-2.0
ANGLE	
UNIT	mm
ABLIC Inc.	

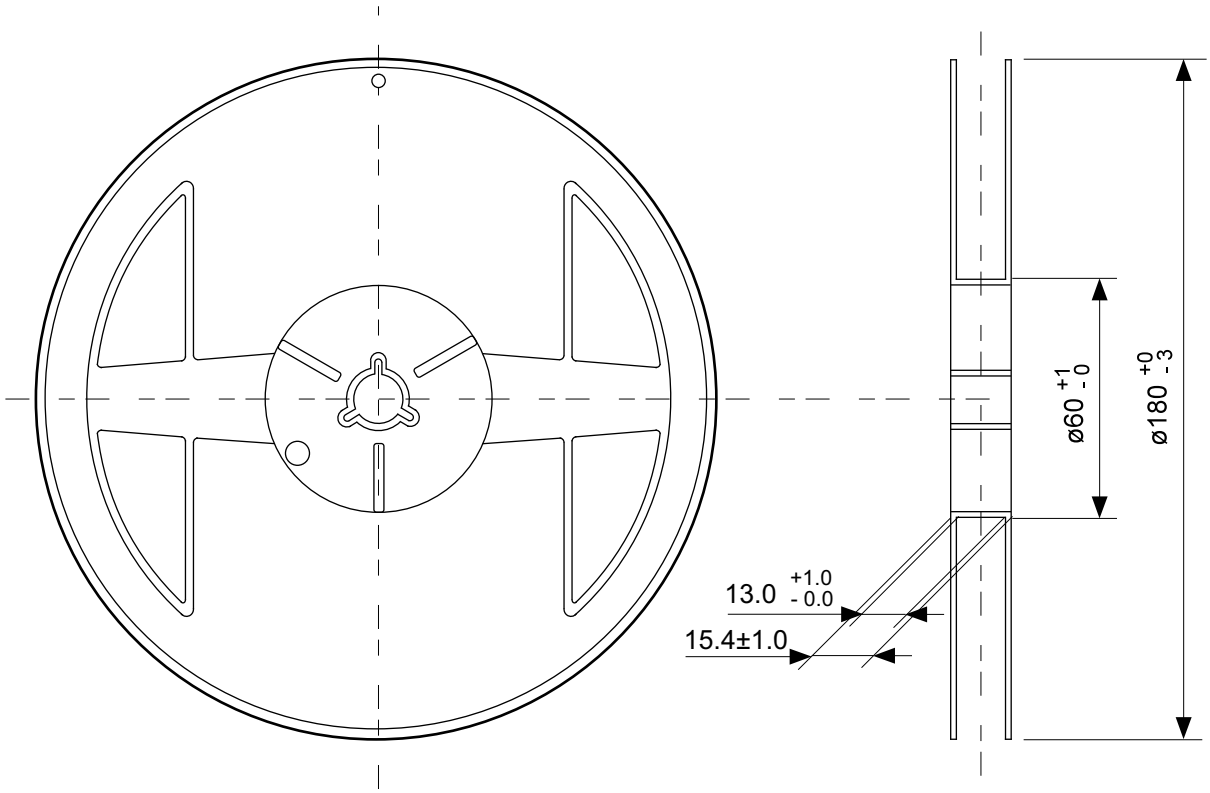

Enlarged drawing in the central part

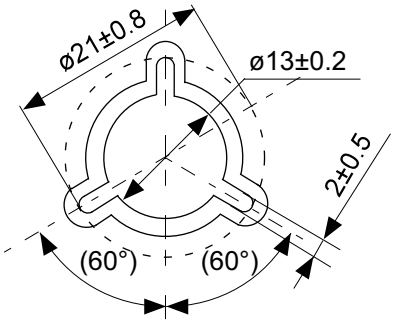

No. UP005-A-R-SD-2.0

TITLE	SOT895-A-Reel		
No.	UP005-A-R-SD-2.0		
ANGLE		QTY.	1,000
UNIT	mm		
ABLIC Inc.			

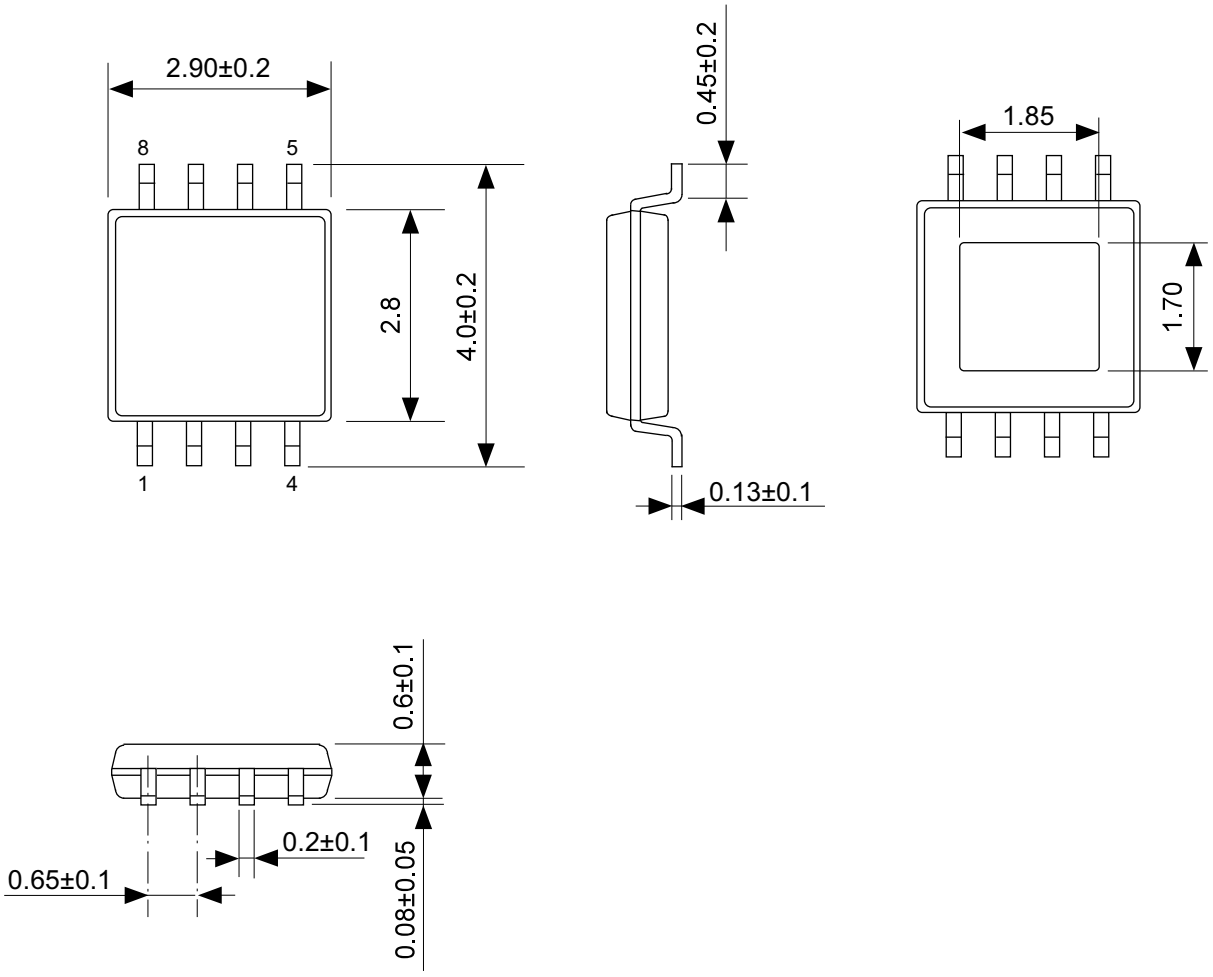

No. FP008-A-P-SD-2.0

TITLE	HTMSOP8-A-PKG Dimensions
No.	FP008-A-P-SD-2.0
ANGLE	
UNIT	mm
ABLIC Inc.	

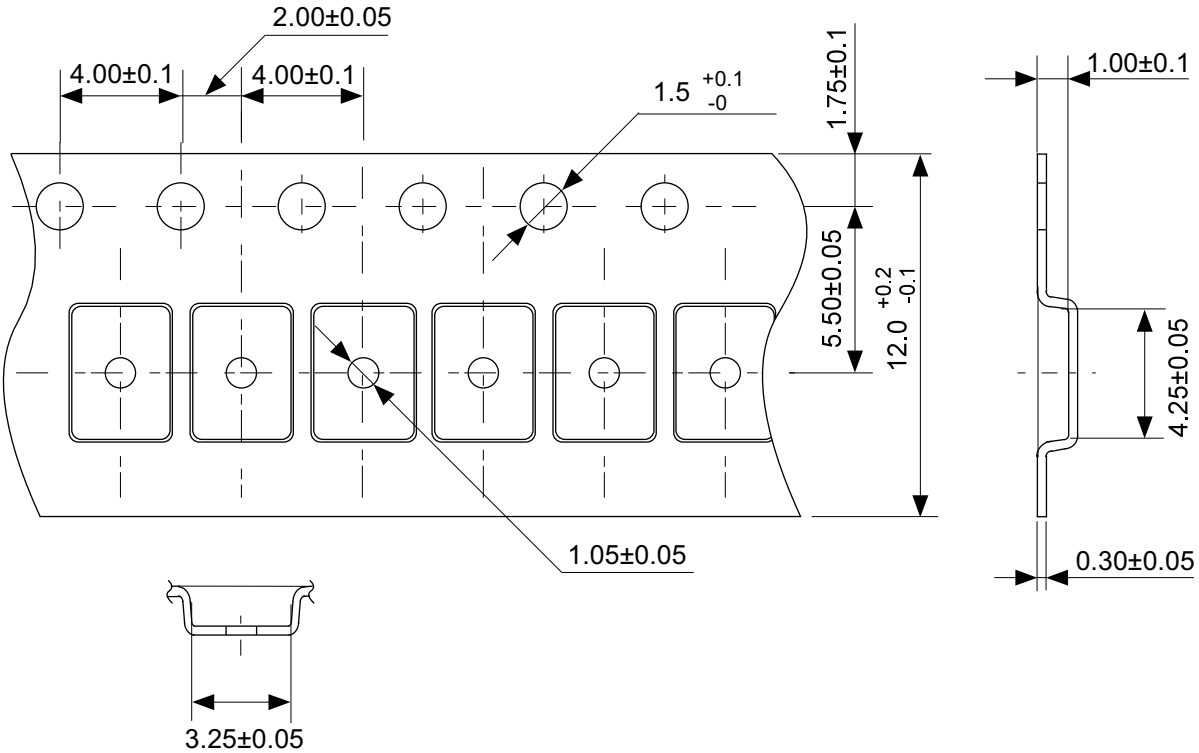

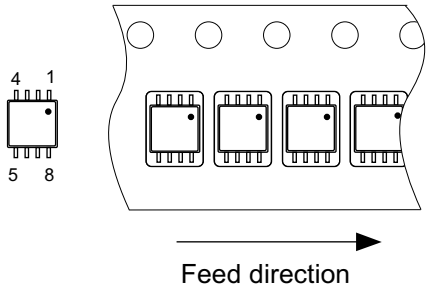

No. FP008-A-C-SD-1.0

TITLE	HTMSOP8-A-Carrier Tape
No.	FP008-A-C-SD-1.0
ANGLE	
UNIT	mm
ABLIC Inc.	

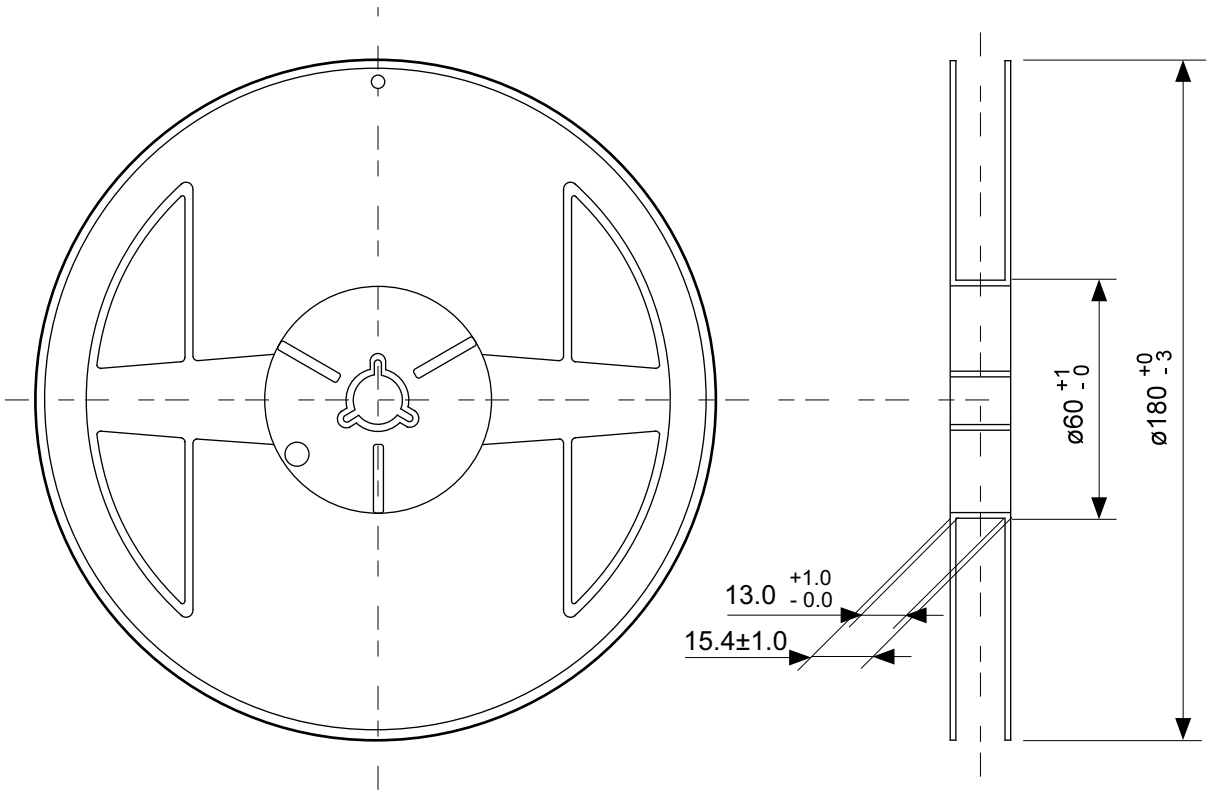

Enlarged drawing in the central part

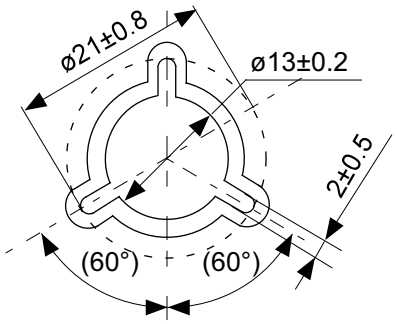

No. FP008-A-R-SD-2.0

TITLE	HTMSOP8-A-Reel		
No.	FP008-A-R-SD-2.0		
ANGLE		QTY.	4,000
UNIT	mm		
ABLIC Inc.			

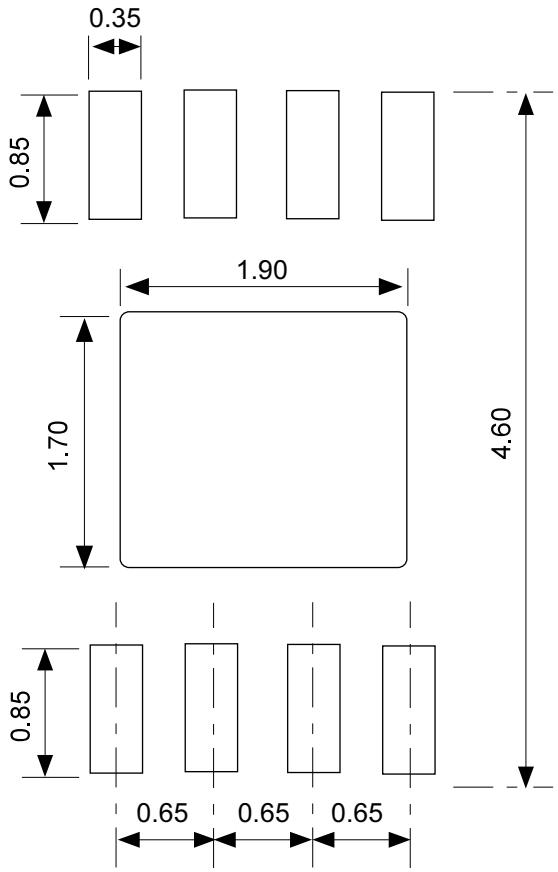

No. FP008-A-L-SD-2.0

TITLE	HTMSOP8-A -Land Recommendation
No.	FP008-A-L-SD-2.0
ANGLE	
UNIT	mm
ABLIC Inc.	

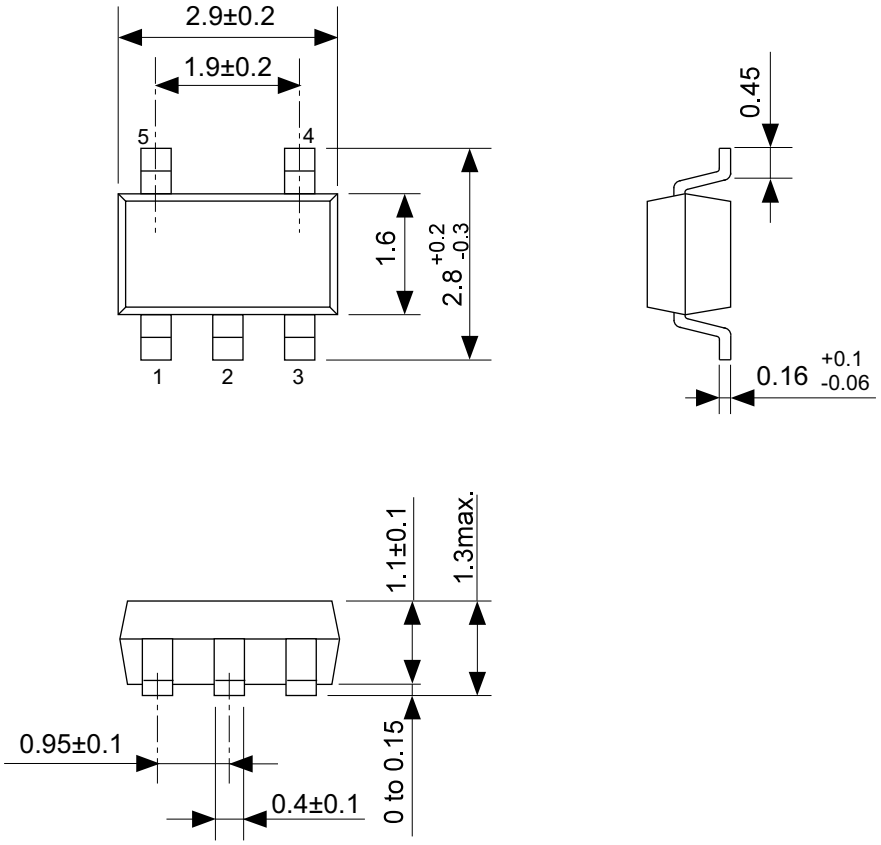

No. MP005-A-P-SD-1.3

TITLE	SOT235-A-PKG Dimensions
No.	MP005-A-P-SD-1.3
ANGLE	
UNIT	mm

ABLIC Inc.

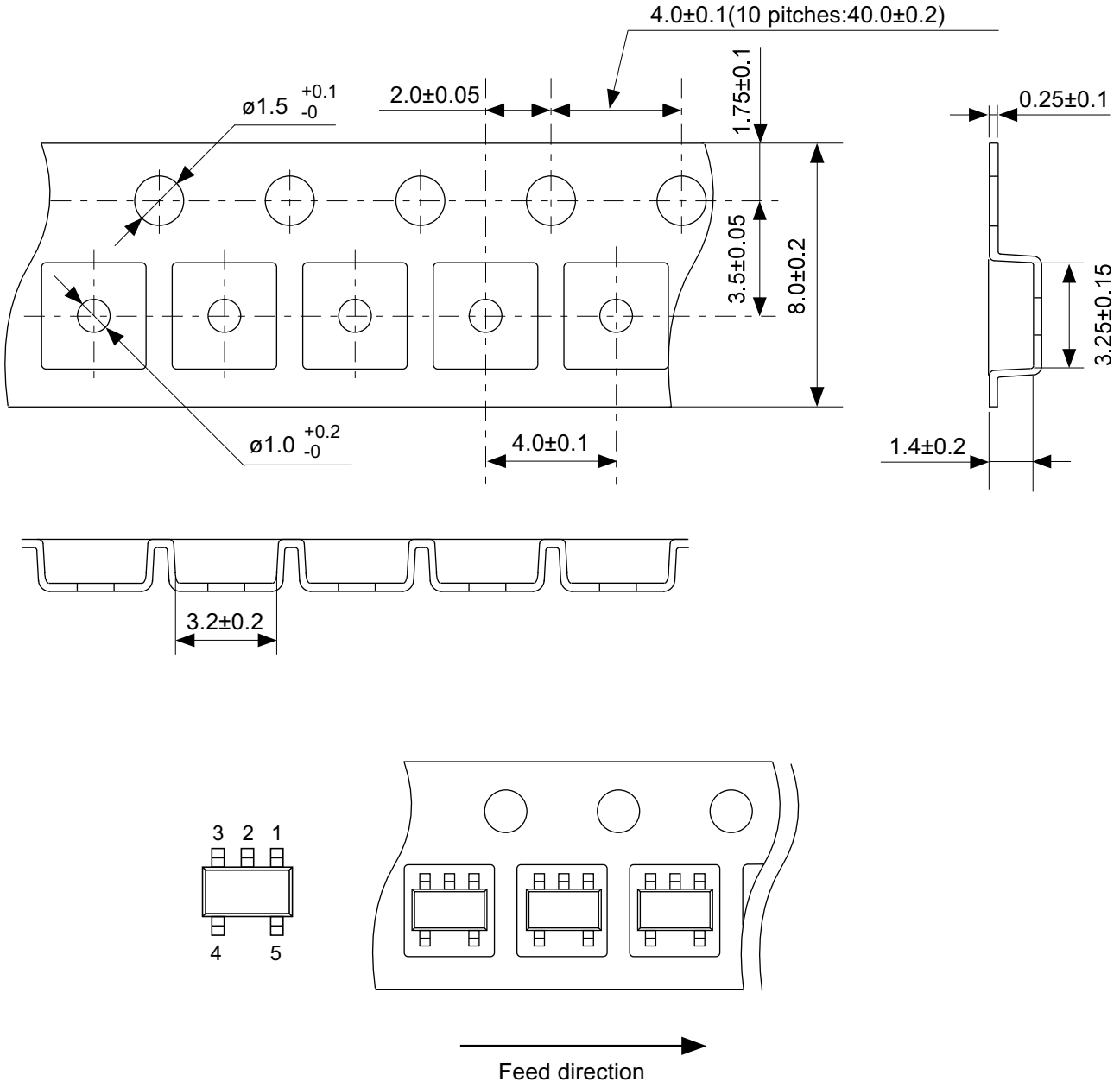

No. MP005-A-C-SD-2.1

TITLE	SOT235-A-Carrier Tape
No.	MP005-A-C-SD-2.1
ANGLE	
UNIT	mm
ABLIC Inc.	

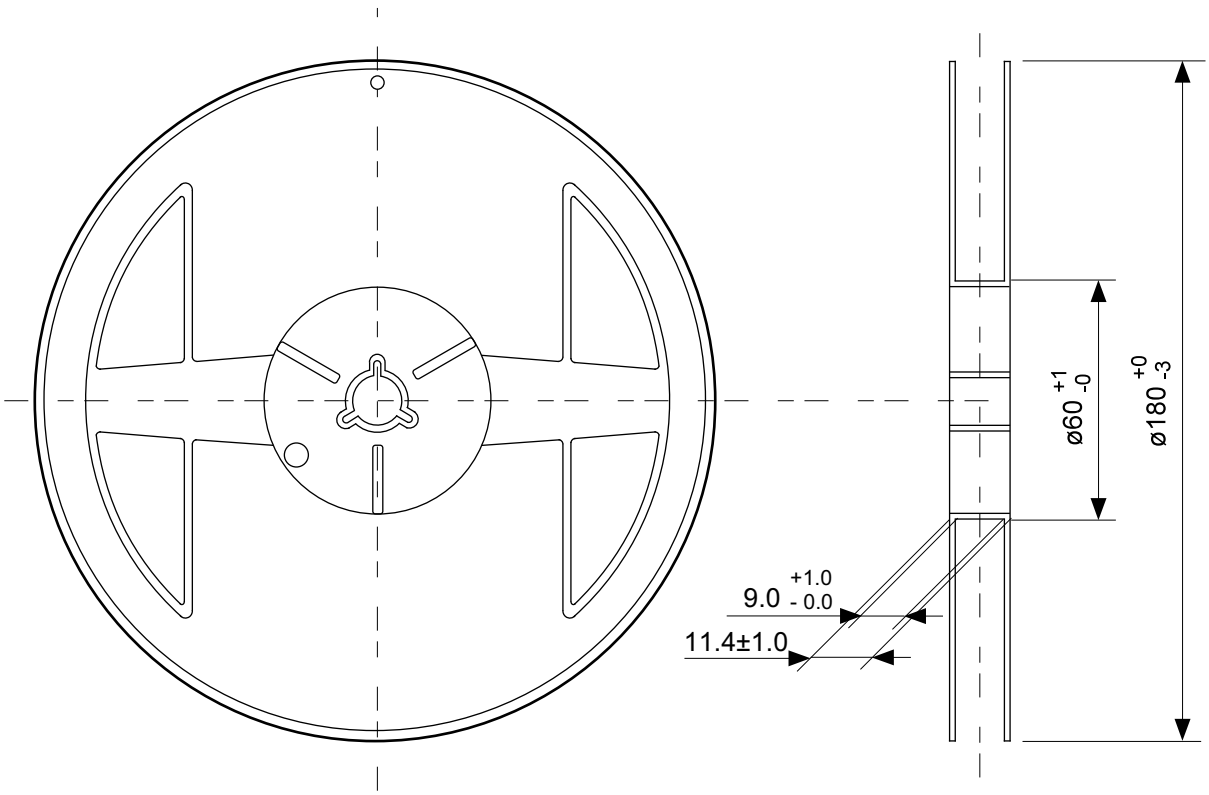

Enlarged drawing in the central part

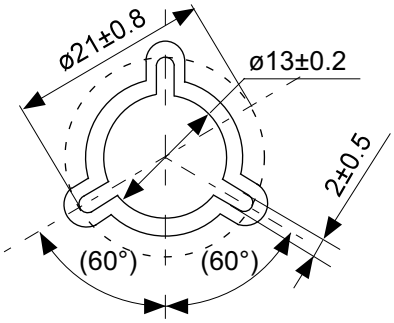

No. MP005-A-R-SD-2.0

TITLE	SOT235-A-Reel		
No.	MP005-A-R-SD-2.0		
ANGLE		QTY.	3,000
UNIT	mm		
ABLIC Inc.			

Disclaimers (Handling Precautions)

1. All the information described herein (product data, specifications, figures, tables, programs, algorithms and application circuit examples, etc.) is current as of publishing date of this document and is subject to change without notice.
2. The circuit examples and the usages described herein are for reference only, and do not guarantee the success of any specific mass-production design.
   ABLIC Inc. is not liable for any losses, damages, claims or demands caused by the reasons other than the products described herein (hereinafter "the products") or infringement of third-party intellectual property right and any other right due to the use of the information described herein.
3. ABLIC Inc. is not liable for any losses, damages, claims or demands caused by the incorrect information described herein.
4. Be careful to use the products within their ranges described herein. Pay special attention for use to the absolute maximum ratings, operation voltage range and electrical characteristics, etc.
   ABLIC Inc. is not liable for any losses, damages, claims or demands caused by failures and / or accidents, etc. due to the use of the products outside their specified ranges.
5. Before using the products, confirm their applications, and the laws and regulations of the region or country where they are used and verify suitability, safety and other factors for the intended use.
6. When exporting the products, comply with the Foreign Exchange and Foreign Trade Act and all other export-related laws, and follow the required procedures.
7. The products are strictly prohibited from using, providing or exporting for the purposes of the development of weapons of mass destruction or military use. ABLIC Inc. is not liable for any losses, damages, claims or demands caused by any provision or export to the person or entity who intends to develop, manufacture, use or store nuclear, biological or chemical weapons or missiles, or use any other military purposes.
8. The products are not designed to be used as part of any device or equipment that may affect the human body, human life, or assets (such as medical equipment, disaster prevention systems, security systems, combustion control systems, infrastructure control systems, vehicle equipment, traffic systems, in-vehicle equipment, aviation equipment, aerospace equipment, and nuclear-related equipment), excluding when specified for in-vehicle use or other uses by ABLIC, Inc. Do not apply the products to the above listed devices and equipments.
   ABLIC Inc. is not liable for any losses, damages, claims or demands caused by unauthorized or unspecified use of the products.
9. In general, semiconductor products may fail or malfunction with some probability. The user of the products should therefore take responsibility to give thorough consideration to safety design including redundancy, fire spread prevention measures, and malfunction prevention to prevent accidents causing injury or death, fires and social damage, etc. that may ensue from the products' failure or malfunction.
   The entire system in which the products are used must be sufficiently evaluated and judged whether the products are allowed to apply for the system on customer's own responsibility.
10. The products are not designed to be radiation-proof. The necessary radiation measures should be taken in the product design by the customer depending on the intended use.
11. The products do not affect human health under normal use. However, they contain chemical substances and heavy metals and should therefore not be put in the mouth. The fracture surfaces of wafers and chips may be sharp. Be careful when handling these with the bare hands to prevent injuries, etc.
12. When disposing of the products, comply with the laws and ordinances of the country or region where they are used.
13. The information described herein contains copyright information and know-how of ABLIC Inc. The information described herein does not convey any license under any intellectual property rights or any other rights belonging to ABLIC Inc. or a third party. Reproduction or copying of the information from this document or any part of this document described herein for the purpose of disclosing it to a third-party is strictly prohibited without the express permission of ABLIC Inc.
14. For more details on the information described herein or any other questions, please contact ABLIC Inc.'s sales representative.
15. This Disclaimers have been delivered in a text using the Japanese language, which text, despite any translations into the English language and the Chinese language, shall be controlling.

2.4-2019.07

ENTEGRECİ

Bu belge www.entegreci.com üzerinden sunulmaktadır.

Elektronik komponent tedarikinde Entegreci

Entegreci, Eskişehir merkezli, Türkiye geneline satış yapan bir elektronik komponent mağazasıdır. Entegreler (IC), mikrodenetleyiciler, transistörler, diyotlar, pasif elemanlar, konnektörler, modüller ve geliştirme kartları tek adetten seri üretim adetlerine kadar satılır. Ürün sayfalarında güncel stok durumunu, fiyatı ve datasheet bağlantısını bulabilirsiniz.

Parça koduyla arama

Üretici parça numarasını yazın; stok ve fiyatı hemen görün.

www.entegreci.com

Ürün kategorileri

Entegreden kapasitöre tüm elektronik komponent kategorileri.

Kategorilere göz atın

Üreticiler

Aradığınız üreticinin ürünlerini tek sayfada inceleyin.

Üreticileri görün

Toplu alım ve teklif

Listede olmayan ya da yüksek adetli parçalar için teklif isteyin.

Teklif isteyin

www.entegreci.com | **destek@entegreci.com** | **0850 305 90 34**

Entegreci is an online electronic components store based in Türkiye. Search by manufacturer part number to see stock, prices and datasheets for integrated circuits, microcontrollers, transistors, passive components and connectors, or request a quote for parts that are not listed.

Bu sayfa Entegreci tarafından eklenmiştir. Belgenin önceki sayfaları asıl yayıncısına aittir ve içeriği değiştirilmemiştir; en güncel sürüm için belgenin yayıncısına başvurun.