5.5 V INPUT, 200 mA VOLTAGE REGULATOR

© ABLIC Inc., 2011-2023

The S-1313 Series, developed by using the CMOS technology, is a positive voltage regulator IC which has the super low current consumption and the low dropout voltage.
Current consumption is as low as 0.9 μA typ., and a ceramic capacitor of 0.1 μF or more can be used as the input and output capacitors.
It also has high-accuracy output voltage of ±1.0%.

■ Features

- Output voltage: 1.0 V to 3.5 V, selectable in 0.05 V step.
- Input voltage: 1.5 V to 5.5 V
- Output voltage accuracy: ±1.0% (1.0 V to 1.45 V output product: ±15 mV)
- Dropout voltage: 170 mV typ. (2.8 V output product, I_{OUT} = 100 mA)
- Current consumption: During operation: 0.9 μA typ., 1.35 μA max.
  During power-off: 0.01 μA typ., 0.1 μA max.
- Output current: Possible to output 200 mA ($V_{OUT(S)} \geq 1.4$ V, $V_{IN} \geq V_{OUT(S)} + 1.0$ V)*1
- Input and output capacitors: A ceramic capacitor of 0.1 μF or more can be used.
- Built-in overcurrent protection circuit: Limits overcurrent of output transistor.
- Built-in thermal shutdown circuit: Prevents damage caused by heat.
- Built-in ON / OFF circuit: Ensures long battery life.
  Discharge shunt function "available" / "unavailable" is selectable.
  Pull-down function "available" / "unavailable" is selectable.
- Operation temperature range: Ta = −40°C to +85°C
- Lead-free (Sn 100%), halogen-free

***1.** Attention should be paid to the power dissipation of the package when the output current is large.

■ Applications

- Constant-voltage power supply for portable communication device, digital camera, and digital audio player
- Constant-voltage power supply for battery-powered device
- Constant-voltage power supply for home electric appliance

■ Packages

- SOT-23-5
- SC-82AB
- HSNT-4 (1010)
- HSNT-4 (0808)

■ Block Diagrams

1. S-1313 Series A type

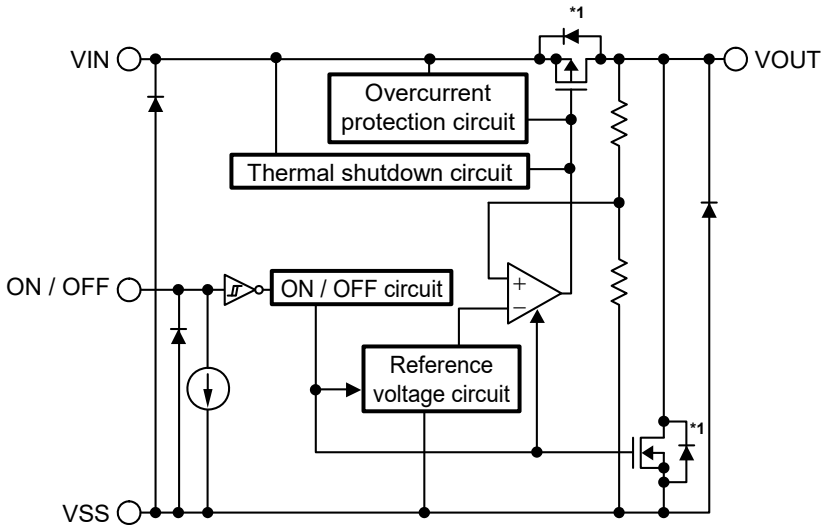

Function	Status
ON / OFF logic	Active "H"
Discharge shunt function	Available
Constant current source pull-down	Available

***1.** Parasitic diode

Figure 1

2. S-1313 Series B type

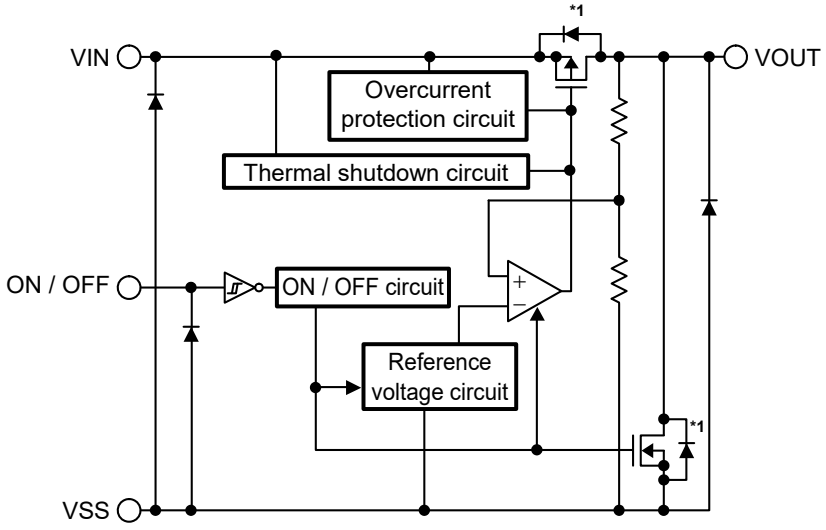

Function	Status
ON / OFF logic	Active "H"
Discharge shunt function	Available
Constant current source pull-down	Unavailable

***1.** Parasitic diode

Figure 2

3. S-1313 Series C type

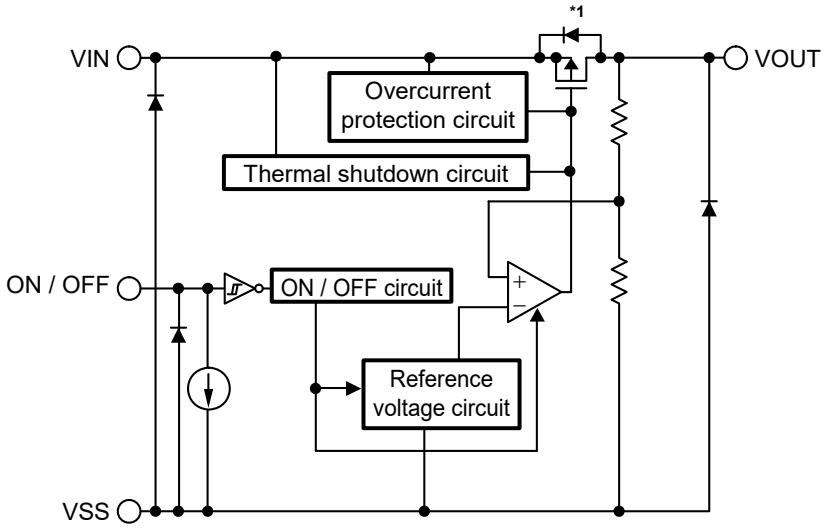

Function	Status
ON / OFF logic	Active "H"
Discharge shunt function	Unavailable
Constant current source pull-down	Available

***1.** Parasitic diode

Figure 3

4. S-1313 Series D type

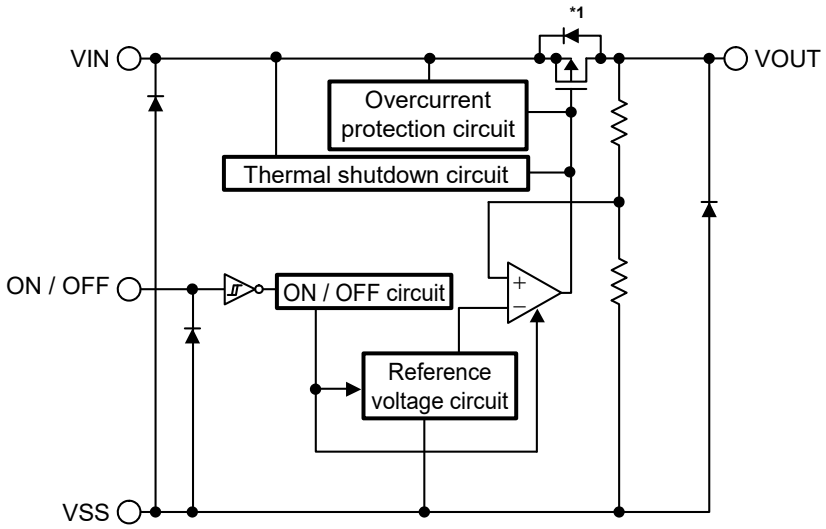

Function	Status
ON / OFF logic	Active "H"
Discharge shunt function	Unavailable
Constant current source pull-down	Unavailable

***1.** Parasitic diode

Figure 4

■ Product Name Structure

Users can select the product type, output voltage, and package type for the S-1313 Series. Refer to "**1. Product name**" regarding the contents of product name, "**2. Function list of product type**" regarding the product type, "**3. Packages**" regarding the package drawings, "**4. Product name list**" regarding details of the product name.

1. Product name

S-1313 x xx - xxxx U 3

Environmental code
U: Lead-free (Sn 100%), halogen-free

Package abbreviation and IC packing specifications*1
M5T1: SOT-23-5, Tape
N4T1: SC-82AB, Tape
A4T2: HSNT-4 (1010), Tape
A4T1: HSNT-4 (0808), Tape

Output voltage*2
10 to 35
(e.g., when the output voltage is 1.0 V, it is expressed as 10.)

Product type*3
A to D

***1.** Refer to the tape drawing.
***2.** If you request the product which has 0.05 V step, contact our sales representatives.
***3.** Refer to "**2. Function list of product type**".

2. Function list of product type

Table 1

Product Type	ON / OFF Logic	Discharge Shunt Function	Constant Current Source Pull-down
A	Active "H"	Available	Available
B	Active "H"	Available	Unavailable
C	Active "H"	Unavailable	Available
D	Active "H"	Unavailable	Unavailable

3. Packages

Table 2 Package Drawing Codes

Package Name	Dimension	Tape	Reel	Land
SOT-23-5	MP005-A-P-SD	MP005-A-C-SD	MP005-A-R-SD	–
SC-82AB	NP004-A-P-SD	NP004-A-C-SD NP004-A-C-S1	NP004-A-R-SD	–
HSNT-4 (1010)	PL004-A-P-SD	PL004-A-C-SD	PL004-A-R-SD	PL004-A-L-SD
HSNT-4 (0808)	PK004-A-P-SD	PK004-A-C-SD	PK004-A-R-SD	PK004-A-L-SD

4. Product name list

4. 1 S-1313 Series A type

ON / OFF logic: Active "H"
Discharge shunt function: Available Constant current source pull-down: Available

Table 3

Output Voltage	SOT-23-5	SC-82AB	HSNT-4 (1010)	HSNT-4 (0808)
1.2 V ± 15 mV	S-1313A12-M5T1U3	S-1313A12-N4T1U3	S-1313A12-A4T2U3	S-1313A12-A4T1U3
1.8 V ± 1.0%	S-1313A18-M5T1U3	S-1313A18-N4T1U3	S-1313A18-A4T2U3	S-1313A18-A4T1U3
2.5 V ± 1.0%	S-1313A25-M5T1U3	S-1313A25-N4T1U3	S-1313A25-A4T2U3	S-1313A25-A4T1U3
3.3 V ± 1.0%	S-1313A33-M5T1U3	S-1313A33-N4T1U3	S-1313A33-A4T2U3	S-1313A33-A4T1U3

Remark Please contact our sales representatives for products other than the above.

4. 2 S-1313 Series B type

ON / OFF logic: Active "H"
Discharge shunt function: Available Constant current source pull-down: Unavailable

Table 4

Output Voltage	SOT-23-5	SC-82AB	HSNT-4 (1010)	HSNT-4 (0808)
1.2 V ± 15 mV	S-1313B12-M5T1U3	S-1313B12-N4T1U3	S-1313B12-A4T2U3	S-1313B12-A4T1U3
1.8 V ± 1.0%	S-1313B18-M5T1U3	S-1313B18-N4T1U3	S-1313B18-A4T2U3	S-1313B18-A4T1U3
2.5 V ± 1.0%	S-1313B25-M5T1U3	S-1313B25-N4T1U3	S-1313B25-A4T2U3	S-1313B25-A4T1U3
3.3 V ± 1.0%	S-1313B33-M5T1U3	S-1313B33-N4T1U3	S-1313B33-A4T2U3	S-1313B33-A4T1U3

Remark Please contact our sales representatives for products other than the above.

4. 3 S-1313 Series C type

ON / OFF logic: Active "H"
Discharge shunt function: Unavailable Constant current source pull-down: Available

Table 5

Output Voltage	SOT-23-5	SC-82AB	HSNT-4 (1010)	HSNT-4 (0808)
1.2 V ± 15 mV	S-1313C12-M5T1U3	S-1313C12-N4T1U3	S-1313C12-A4T2U3	S-1313C12-A4T1U3
1.8 V ± 1.0%	S-1313C18-M5T1U3	S-1313C18-N4T1U3	S-1313C18-A4T2U3	S-1313C18-A4T1U3
2.5 V ± 1.0%	S-1313C25-M5T1U3	S-1313C25-N4T1U3	S-1313C25-A4T2U3	S-1313C25-A4T1U3
3.3 V ± 1.0%	S-1313C33-M5T1U3	S-1313C33-N4T1U3	S-1313C33-A4T2U3	S-1313C33-A4T1U3

Remark Please contact our sales representatives for products other than the above.

4. 4 S-1313 Series D type

ON / OFF logic: Active "H"
Discharge shunt function: Unavailable Constant current source pull-down: Unavailable

Table 6

Output Voltage	SOT-23-5	SC-82AB	HSNT-4 (1010)	HSNT-4 (0808)
1.2 V ± 15 mV	S-1313D12-M5T1U3	S-1313D12-N4T1U3	S-1313D12-A4T2U3	S-1313D12-A4T1U3
1.8 V ± 1.0%	S-1313D18-M5T1U3	S-1313D18-N4T1U3	S-1313D18-A4T2U3	S-1313D18-A4T1U3
2.5 V ± 1.0%	S-1313D25-M5T1U3	S-1313D25-N4T1U3	S-1313D25-A4T2U3	S-1313D25-A4T1U3
3.3 V ± 1.0%	S-1313D33-M5T1U3	S-1313D33-N4T1U3	S-1313D33-A4T2U3	S-1313D33-A4T1U3

Remark Please contact our sales representatives for products other than the above.

■ Pin Configurations

1. SOT-23-5

Top view

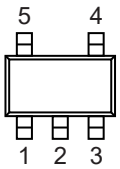

Figure 5

Table 7

Pin No.	Symbol	Description
1	VIN	Input voltage pin
2	VSS	GND pin
3	ON / OFF	ON / OFF pin
4	NC*1	No connection
5	VOUT	Output voltage pin

***1.** The NC pin is electrically open.
The NC pin can be connected to the VIN pin or the VSS pin.

2. SC-82AB

Top view

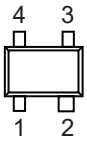

Figure 6

Table 8

Pin No.	Symbol	Description
1	ON / OFF	ON / OFF pin
2	VSS	GND pin
3	VOUT	Output voltage pin
4	VIN	Input voltage pin

3. HSNT-4 (1010)

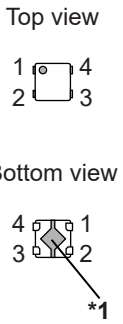

Figure 7

Table 9

Pin No.	Symbol	Description
1	VOUT	Output voltage pin
2	VSS	GND pin
3	ON / OFF	ON / OFF pin
4	VIN	Input voltage pin

***1.** Connect the heatsink of backside at shadowed area to the board, and set electric potential GND.
However, do not use it as the function of electrode.

4. HSNT-4 (0808)

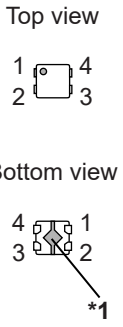

Figure 8

Table 10

Pin No.	Symbol	Description
1	VOUT	Output voltage pin
2	VSS	GND pin
3	ON / OFF	ON / OFF pin
4	VIN	Input voltage pin

***1.** Connect the heat sink of backside at shadowed area to the board, and set electric potential GND.
However, do not use it as the function of electrode.

■ Absolute Maximum Ratings

Table 11

(Ta = +25°C unless otherwise specified)

Item		Symbol	Absolute Maximum Rating	Unit
Input voltage		V_{IN}	V_{SS} − 0.3 to V_{SS} + 6.0	V
		$V_{ON / OFF}$	V_{SS} − 0.3 to V_{SS} + 6.0	V
Output voltage		V_{OUT}	V_{SS} − 0.3 to V_{IN} + 0.3	V
Output current		I_{OUT}	240	mA
Power dissipation	SOT-23-5	P_D	600*1	mW
	SC-82AB		400*1	mW
	HSNT-4 (1010)		340*1	mW
	HSNT-4 (0808)		335*1	mW
Operation ambient temperature		T_{opr}	−40 to +85	°C
Storage temperature		T_{stg}	−40 to +125	°C

***1.** When mounted on board
[Mounted board]
(1) Board size: 114.3 mm × 76.2 mm × t1.6 mm
(2) Name: JEDEC STANDARD51-7

Caution The absolute maximum ratings are rated values exceeding which the product could suffer physical damage. These values must therefore not be exceeded under any conditions.

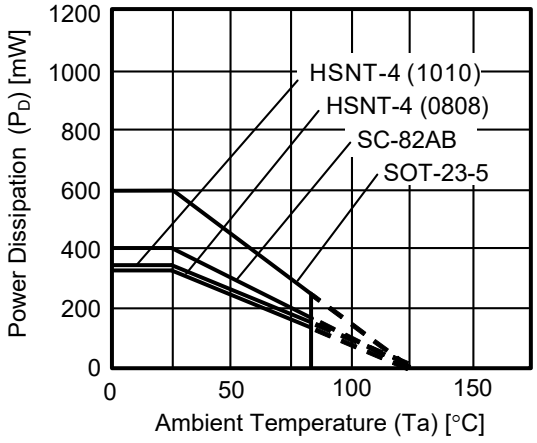

Figure 9 Power Dissipation of Package (When Mounted on Board)

Power Dissipation of HSNT-4 (1010) and HSNT-4 (0808) (Reference)

Power dissipation of package differs depending on the mounting conditions.
Consider the power dissipation characteristics under the following conditions as reference.

[Mounted board]

(1) Board size: 40 mm × 40 mm × t0.8 mm
(2) Board material: Glass epoxy resin (four layers)
(3) Wiring ratio: 50%
(4) Test conditions: When mounted on board (wind speed: 0 m/s)
(5) Land pattern: Refer to the recommended land pattern
Drawing code: PL004-A-L-SD (HSNT-4 (1010)), PK004-A-L-SD (HSNT-4 (0808))

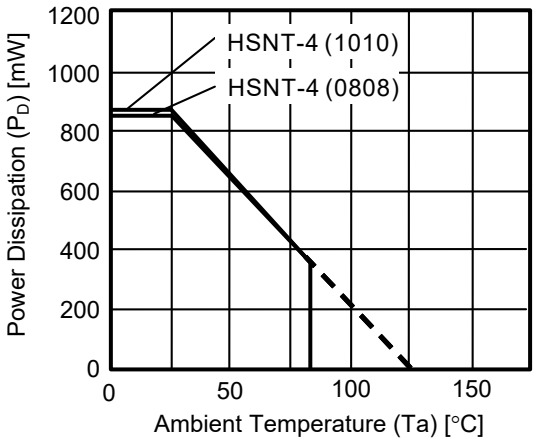

Figure 10 Power Dissipation of Package (When Mounted on Board)

Table 12

Condition	Power Dissipation (Reference)	Thermal Resistance Value (θj – a)
HSNT-4 (1010) (When mounted on board)	870 mW	115°C/W
HSNT-4 (0808) (When mounted on board)	850 mW	117°C/W

■ Electrical Characteristics

Table 13

(Ta = +25°C unless otherwise specified)

Item	Symbol	Condition		Min.	Typ.	Max.	Unit	Test Circuit
Output voltage*1	$V_{OUT(E)}$	$V_{IN} = V_{OUT(S)} + 1.0$ V, I_{OUT} = 30 mA	1.0 V ≤ $V_{OUT(S)}$ < 1.5 V	$V_{OUT(S)} - 0.015$	$V_{OUT(S)}$	$V_{OUT(S)} + 0.015$	V	1
			1.5 V ≤ $V_{OUT(S)}$ ≤ 3.5 V	$V_{OUT(S)} \times 0.99$	$V_{OUT(S)}$	$V_{OUT(S)} \times 1.01$	V	1
Output current*2	I_{OUT}	$V_{IN} \geq V_{OUT(S)} + 1.0$ V	1.0 V ≤ $V_{OUT(S)}$ < 1.1 V	100*5	–	–	mA	3
			1.1 V ≤ $V_{OUT(S)}$ < 1.2 V	125*5	–	–	mA	3
			1.2 V ≤ $V_{OUT(S)}$ < 1.3 V	150*5	–	–	mA	3
			1.3 V ≤ $V_{OUT(S)}$ < 1.4 V	175*5	–	–	mA	3
			1.4 V ≤ $V_{OUT(S)}$ ≤ 3.5 V	200*5	–	–	mA	3
Dropout voltage*3	V_{drop}	I_{OUT} = 100 mA	1.0 V ≤ $V_{OUT(S)}$ < 1.1 V	0.50	0.76	1.55	V	1
			1.1 V ≤ $V_{OUT(S)}$ < 1.2 V	–	0.67	1.39	V	1
			1.2 V ≤ $V_{OUT(S)}$ < 1.3 V	–	0.58	1.25	V	1
			1.3 V ≤ $V_{OUT(S)}$ < 1.4 V	–	0.49	1.11	V	1
			1.4 V ≤ $V_{OUT(S)}$ < 1.5 V	–	0.43	0.99	V	1
			1.5 V ≤ $V_{OUT(S)}$ < 1.7 V	–	0.37	0.85	V	1
			1.7 V ≤ $V_{OUT(S)}$ < 1.8 V	–	0.31	0.68	V	1
			1.8 V ≤ $V_{OUT(S)}$ < 2.0 V	–	0.27	0.58	V	1
			2.0 V ≤ $V_{OUT(S)}$ < 2.5 V	–	0.23	0.49	V	1
			2.5 V ≤ $V_{OUT(S)}$ < 2.8 V	–	0.18	0.38	V	1
			2.8 V ≤ $V_{OUT(S)}$ < 3.0 V	–	0.17	0.33	V	1
			3.0 V ≤ $V_{OUT(S)}$ ≤ 3.5 V	–	0.16	0.32	V	1
Line regulation	$\frac{\Delta V_{OUT1}}{\Delta V_{IN} \bullet V_{OUT}}$	$V_{OUT(S)} + 0.5$ V ≤ V_{IN} ≤ 5.5 V, I_{OUT} = 1 μA	1.0 V ≤ $V_{OUT(S)}$ ≤ 3.5 V	–	0.05	0.2	%/V	1
		$V_{OUT(S)} + 0.5$ V ≤ V_{IN} ≤ 5.5 V, I_{OUT} = 30 mA	1.0 V ≤ $V_{OUT(S)}$ < 1.1 V	–	0.07	2.0	%/V	1
			1.1 V ≤ $V_{OUT(S)}$ < 1.2 V	–	0.06	1.0	%/V	1
			1.2 V ≤ $V_{OUT(S)}$ ≤ 3.5 V	–	0.05	0.2	%/V	1
Load regulation	ΔV_{OUT2}	$V_{IN} = V_{OUT(S)} + 1.0$ V, 1 μA ≤ I_{OUT} ≤ 100 mA	1.0 V ≤ $V_{OUT(S)}$ ≤ 3.5 V	–	20	40	mV	1
		$V_{IN} = V_{OUT(S)} + 1.0$ V, 100 μA ≤ I_{OUT} ≤ 200 mA	1.0 V ≤ $V_{OUT(S)}$ < 1.1 V	–	40	640	mV	1
			1.1 V ≤ $V_{OUT(S)}$ < 1.2 V	–	40	400	mV	1
			1.2 V ≤ $V_{OUT(S)}$ < 1.3 V	–	40	160	mV	1
			1.3 V ≤ $V_{OUT(S)}$ < 1.4 V	–	40	80	mV	1
			1.4 V ≤ $V_{OUT(S)}$ ≤ 3.5 V	–	40	80	mV	1
Output voltage temperature coefficient*4	$\frac{\Delta V_{OUT}}{\Delta Ta \bullet V_{OUT}}$	$V_{IN} = V_{OUT(S)} + 1.0$ V, I_{OUT} = 30 mA, −40°C ≤ Ta ≤ +85°C		–	±130	–	ppm/°C	1
Current consumption during operation	I_{SS1}	$V_{IN} = V_{OUT(S)} + 1.0$ V, ON / OFF pin = ON, no load		–	0.9	1.35	μA	2
Current consumption during power-off	I_{SS2}	$V_{IN} = V_{OUT(S)} + 1.0$ V, ON / OFF pin = OFF, no load		–	0.01	0.1	μA	2
Input voltage	V_{IN}	–		1.5	–	5.5	V	–
ON / OFF pin input voltage "H"	V_{SH}	$V_{IN} = V_{OUT(S)} + 1.0$ V, R_L = 1.0 kΩ, determined by V_{OUT} output level		1.0	–	–	V	4
ON / OFF pin input voltage "L"	V_{SL}	$V_{IN} = V_{OUT(S)} + 1.0$ V, R_L = 1.0 kΩ, determined by V_{OUT} output level		–	–	0.25	V	4
ON / OFF pin input current "H"	I_{SH}	V_{IN} = 5.5 V, $V_{ON / OFF}$ = 5.5 V	B / D type (without constant current source pull-down)	−0.1	–	0.1	μA	4
			A / C type (with constant current source pull-down)	0.05	0.1	0.2	μA	4
ON / OFF pin input current "L"	I_{SL}	V_{IN} = 5.5 V, $V_{ON / OFF}$ = 0 V		−0.1	–	0.1	μA	4
Short-circuit current	I_{short}	$V_{IN} = V_{OUT(S)} + 1.0$ V, ON / OFF pin = ON, V_{OUT} = 0 V		–	50	–	mA	3
Thermal shutdown detection temperature	T_{SD}	Junction temperature		–	150	–	°C	–
Thermal shutdown release temperature	T_{SR}	Junction temperature		–	120	–	°C	–
Discharge shunt resistance during power-off	R_{LOW}	V_{OUT} = 0.1 V, V_{IN} = 5.5 V	A / B type (with discharge shunt function)	–	35	–	Ω	3

***1.** $V_{OUT(S)}$: Set output voltage
$V_{OUT(E)}$: Actual output voltage
Output voltage when fixing I_{OUT} (= 30 mA) and inputting $V_{OUT(S)}$ + 1.0 V

***2.** The output current at which the output voltage becomes 95% of $V_{OUT(E)}$ after gradually increasing the output current.

***3.** $V_{drop} = V_{IN1} - (V_{OUT3} \times 0.98)$
V_{OUT3} is the output voltage when $V_{IN} = V_{OUT(S)} + 1.0$ V and I_{OUT} = 100 mA.
V_{IN1} is the input voltage at which the output voltage becomes 98% of V_{OUT3} after gradually decreasing the input voltage.

***4.** A change in the temperature of the output voltage [mV/°C] is calculated using the following equation.

$$\frac{\Delta V_{OUT}}{\Delta Ta}\ [\text{mV/°C}]^{*1} = V_{OUT(S)}\ [\text{V}]^{*2} \times \frac{\Delta V_{OUT}}{\Delta Ta \bullet V_{OUT}}\ [\text{ppm/°C}]^{*3} \div 1000$$

***1.** Change in temperature of output voltage
***2.** Set output voltage
***3.** Output voltage temperature coefficient

***5.** The output current can be at least this value.
Due to restrictions on the package power dissipation, this value may not be satisfied. Attention should be paid to the power dissipation of the package when the output current is large.
This specification is guaranteed by design.

■ Test Circuits

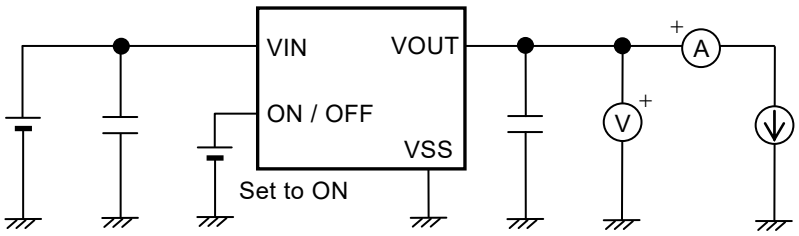

Figure 11 Test Circuit 1

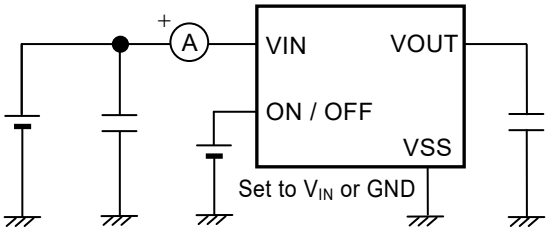

Figure 12 Test Circuit 2

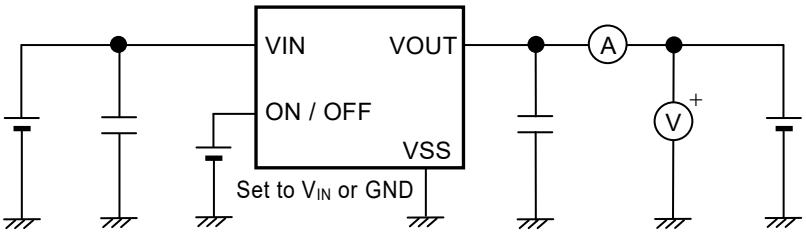

Figure 13 Test Circuit 3

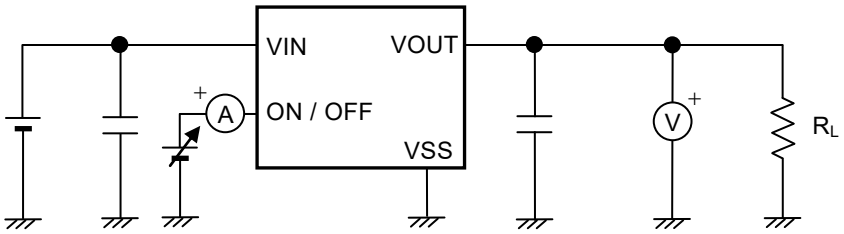

Figure 14 Test Circuit 4

■ Standard Circuit

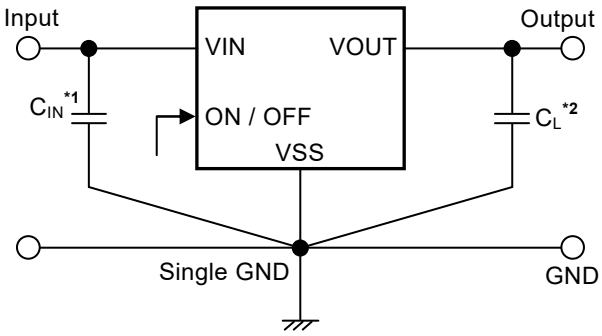

***1.** C_{IN} is a capacitor for stabilizing the input.
***2.** A ceramic capacitor of 0.1 μF or more can be used as C_L.

Figure 15

Caution The above connection diagram and constants will not guarantee successful operation. Perform thorough evaluation using the actual application to set the constansts.

■ Condition of Application

Input capacitor (C_{IN}): 0.1 μF or more
Output capacitor (C_L): 0.1 μF or more

Caution Generally a series regulator may cause oscillation, depending on the selection of external parts. Confirm that no oscillation occurs in the application for which the above capacitors are used.

■ Selection of Input and Output Capacitors (C_{IN}, C_L)

The S-1313 Series requires an output capacitor between the VOUT pin and the VSS pin for phase compensation. Operation is stabilized by a ceramic capacitor with an output capacitance of 0.1 μF or more over the entire temperature range. When using an OS capacitor, a tantalum capacitor, or an aluminum electrolytic capacitor, the capacitance must be 0.1 μF or more.
The value of the output overshoot or undershoot transient response varies depending on the value of the output capacitor. The required capacitance of the input capacitor differs depending on the application.
The recommended capacitance for an application is $C_{IN} \geq 0.1$ μF, $C_L \geq 0.1$ μF; however, when selecting the output capacitor, perform sufficient evaluation, including evaluation of temperature characteristics, on the actual device.

■ Explanation of Terms

1. Low dropout voltage regulator

This voltage regulator has the low dropout voltage due to its built-in low on-resistance transistor.

2. Output voltage (V_{OUT})

The accuracy of the output voltage is ensured at ±1.0% or ±15 mV*1 under the specified conditions of fixed input voltage*2, fixed output current, and fixed temperature.

***1.** When V_{OUT} < 1.5 V: ±15 mV, when $V_{OUT} \geq$ 1.5 V: ±1.0%
***2.** Differs depending on the product.

Caution If the above conditions change, the output voltage value may vary and exceed the accuracy range of the output voltage. Refer to "■ Electrical Characteristics" and "■ Characteristics (Typical Data)" for details.

3. Line regulation $\left(\frac{\Delta V_{OUT1}}{\Delta V_{IN} \bullet V_{OUT}}\right)$

Indicates the dependency of the output voltage on the input voltage. That is, the values show how much the output voltage changes due to a change in the input voltage with the output current remaining unchanged.

4. Load regulation (ΔV_{OUT2})

Indicates the dependency of the output voltage on the output current. That is, the values show how much the output voltage changes due to a change in the output current with the input voltage remaining unchanged.

5. Dropout voltage (V_{drop})

Indicates the difference between input voltage (V_{IN1}) and the output voltage when; decreasing input voltage (V_{IN}) gradually until the output voltage has dropped out to the value of 98% of output voltage (V_{OUT3}), which is at $V_{IN} = V_{OUT(S)} + 1.0$ V.

$V_{drop} = V_{IN1} - (V_{OUT3} \times 0.98)$

6. Output voltage temperature coefficient $\left(\frac{\Delta V_{OUT}}{\Delta Ta \bullet V_{OUT}}\right)$

The shaded area in **Figure 16** is the range where V_{OUT} varies in the operation temperature range when the output voltage temperature coefficient is ±130 ppm/°C.

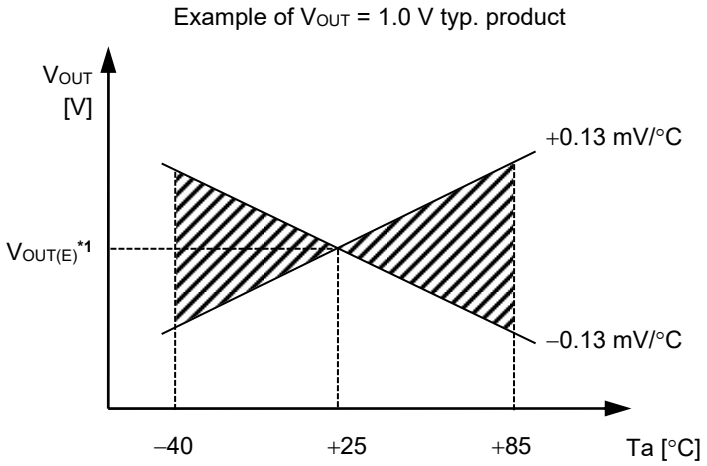

***1.** $V_{OUT(E)}$ is the value of the output voltage measured at Ta = +25°C.

Figure 16

A change in the temperature of the output voltage [mV/°C] is calculated using the following equation.

$$\frac{\Delta V_{OUT}}{\Delta Ta}\ [mV/°C]^{*1} = V_{OUT(S)}\ [V]^{*2} \times \frac{\Delta V_{OUT}}{\Delta Ta \bullet V_{OUT}}\ [ppm/°C]^{*3} \div 1000$$

***1.** Change in temperature of output voltage
***2.** Set output voltage
***3.** Output voltage temperature coefficient

■ Operation

1. Basic operation

Figure 17 shows the block diagram of the S-1313 Series.
The error amplifier compares the reference voltage (V_{ref}) with feedback voltage (V_{fb}), which is the output voltage resistance-divided by feedback resistors (R_s and R_f). It supplies the gate voltage necessary to maintain the constant output voltage which is not influenced by the input voltage and temperature change, to the output transistor.

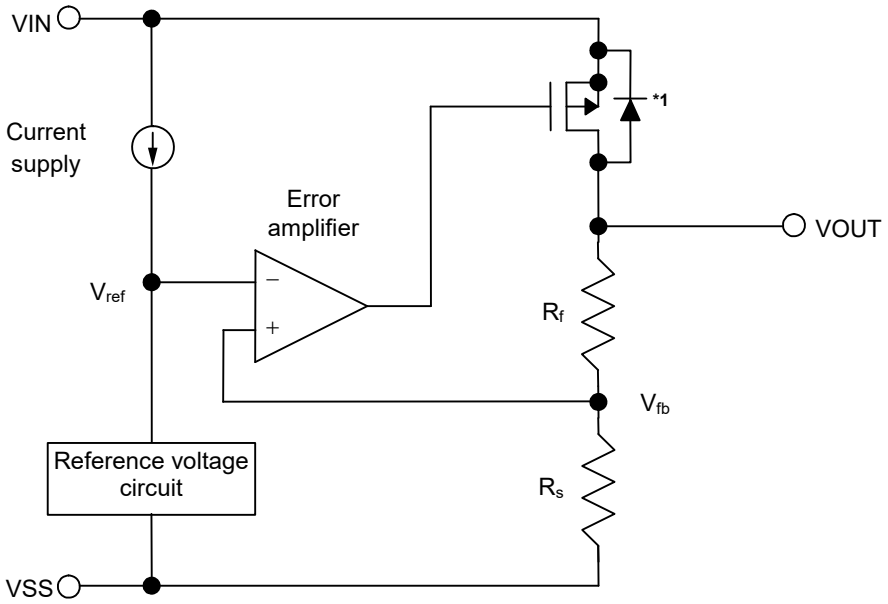

***1.** Parasitic diode

Figure 17

2. Output transistor

In the S-1313 Series, a low on-resistance P-channel MOS FET is used as the output transistor.
Be sure that V_{OUT} does not exceed V_{IN} + 0.3 V to prevent the voltage regulator from being damaged due to reverse current flowing from the VOUT pin through a parasitic diode to the VIN pin, when the potential of V_{OUT} became higher than V_{IN}.

3. ON / OFF pin

This pin starts and stops the regulator.

When the ON / OFF pin is set to OFF level, the entire internal circuit stops operating, and the built-in P-channel MOS FET output transistor between the VIN pin and the VOUT pin is turned off, reducing current consumption significantly. Note that the current consumption increases when a voltage of 0.25 V to V_{IN} − 0.3 V is applied to the ON / OFF pin. The ON / OFF pin is configured as shown in **Figure 18** and **Figure 19**.

3. 1 S-1313 Series A / C type

The ON / OFF pin is internally pulled down to the VSS pin in the floating status, so the VOUT pin is set to the V_{SS} level.

3. 2 S-1313 Series B / D type

The ON / OFF pin is not internally pulled down to the VSS pin, so do not use this pin in the floating status. When not using the ON / OFF pin, connect the pin to the VIN pin.

Table 14

Product Type	ON / OFF Pin	Internal Circuit	VOUT Pin Voltage	Current Consumption
A / B / C / D	"H": ON	Operate	Set value	I_{SS1}*1
A / B / C / D	"L": OFF	Stop	V_{SS} level	I_{SS2}

***1.** Note that the IC's current consumption increases as much as current flows into the constant current of 0.1 μA typ. when the ON / OFF pin is connected to the VIN pin and the S-1313 Series A / C type is operating (refer to **Figure 18**).

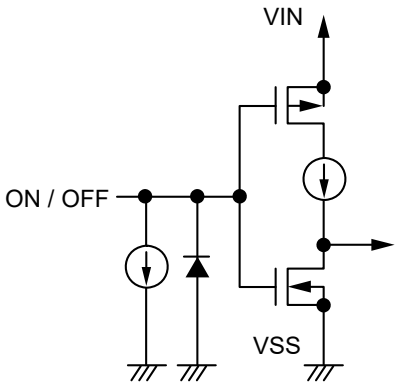

Figure 18 S-1313 Series A / C type

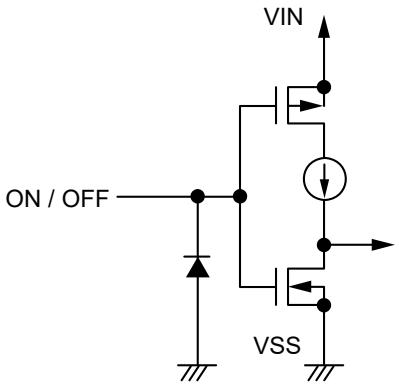

Figure 19 S-1313 Series B / D type

4. Discharge shunt function (S-1313 Series A / B type)

The S-1313 Series A / B type has a built-in discharge shunt circuit to discharge the output capacitance.
The output capacitance is discharged as follows so that the VOUT pin reaches the V_{SS} level.

(1) The ON / OFF pin is set to OFF level.
(2) The output transistor is turned off.
(3) The discharge shunt circuit is turned on.
(4) The output capacitor discharges.

Since the S-1313 Series C / D type does not have a discharge shunt circuit, the VOUT pin is set to V_{SS} level through several MΩ internal divided resistors between the VOUT pin and the VSS pin. The S-1313 Series A / B type allows the VOUT pin to reach the V_{SS} level rapidly due to the discharge shunt circuit.

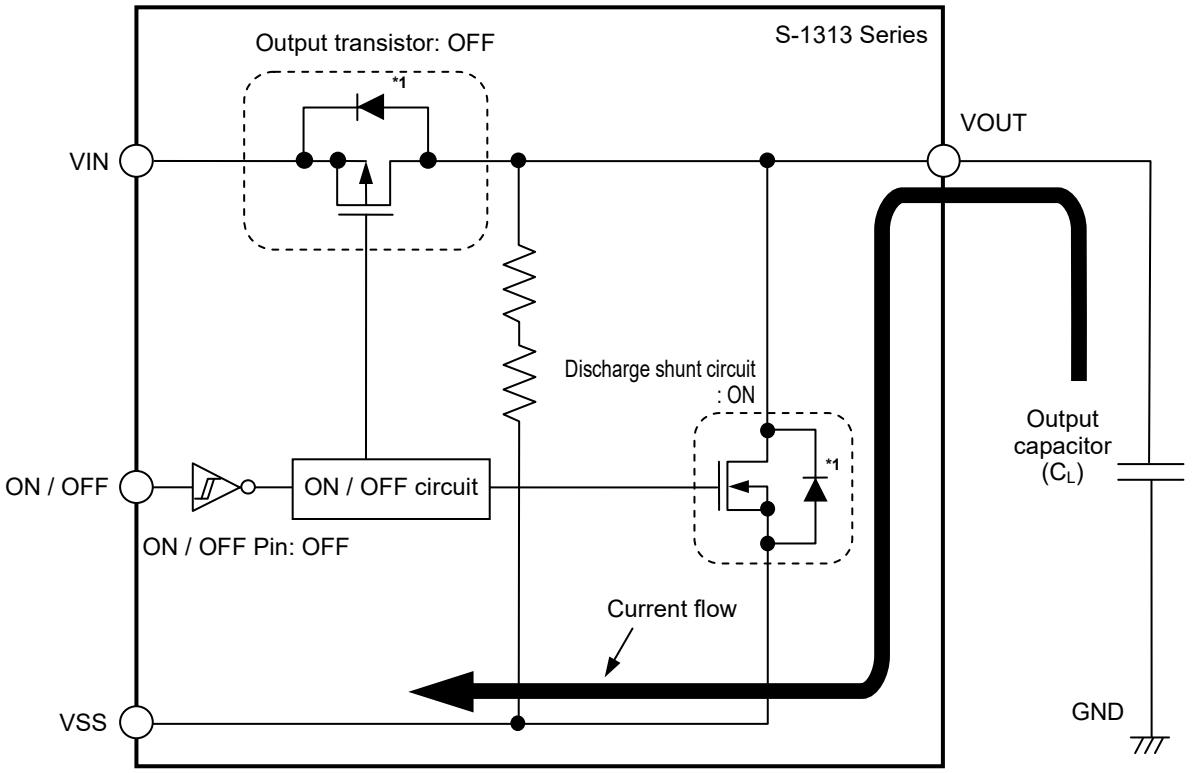

***1.** Parasitic diode

Figure 20

5. Constant current source pull-down (S-1313 Series A / C type)

The ON / OFF pin is internally pulled down to the VSS pin in the floating status, so the VOUT pin is set to the V_{SS} level.

Note that the IC's current consumption increases as much as current flows into the constant current of 0.1 μA typ. when the ON / OFF pin is connected to the VIN pin and the S-1313 Series A / C type is operating.

6. Overcurrent protection circuit

The S-1313 Series includes an overcurrent protection circuit which has the characteristics shown in "**1. Output voltage vs. Output current (When load current increases) (Ta = +25°C)**" in "**■ Characteristics (Typical Data)**", in order to protect the output transistor against an excessive output current and short circuiting between the VOUT pin and the VSS pin. The current when the output pin is short-circuited (I_{short}) is internally set at approx. 50 mA typ., and the normal value is restored for the output voltage, if releasing a short circuit once.

Caution This overcurrent protection circuit does not work as for thermal protection. If this IC long keeps short circuiting inside, pay attention to the conditions of input voltage and load current so that, under the usage conditions including short circuit, the loss of the IC will not exceed power dissipation of the package.

7. Thermal shutdown circuit

The S-1313 Series has a thermal shutdown circuit to protect the device from damage due to overheat. When the junction temperature rises to 150°C typ., the thermal shutdown circuit operates to stop regulating. When the junction temperature drops to 120°C typ., the thermal shutdown circuit is released to restart regulating.
Due to self-heating of the S-1313 Series, if the thermal shutdown circuit starts operating, it stops regulating so that the output voltage drops. When regulation stops, the S-1313 Series does not itself generate heat and the IC's temperature drops. When the temperature drops, the thermal shutdown circuit is released to restart regulating, thus this IC generates heat again. Repeating this procedure makes the waveform of the output voltage into a pulse-like form. Stop or restart of regulation continues unless decreasing either or both of the input voltage and the output current in order to reduce the internal power consumption, or decreasing the ambient temperature.

Table 15

Thermal Shutdown Circuit	VOUT Pin Voltage
Operate: 150°C typ.*1	V_{SS} level
Release: 120°C typ.*1	Set value

***1.** Junction temperature

8. Thermal shutdown circuit stop function

The S-1313 Series has a thermal shutdown circuit stop function during low load current.
When the load current is approx. 0.2 mA or less, the current that flows in the thermal shutdown circuit is stopped and the thermal shutdown circuit stops operating. This makes the super low current consumption operation possible.
When the load current is approx. 0.5 mA or more, a current is applied to the thermal shutdown circuit, thus making the protection operation possible.

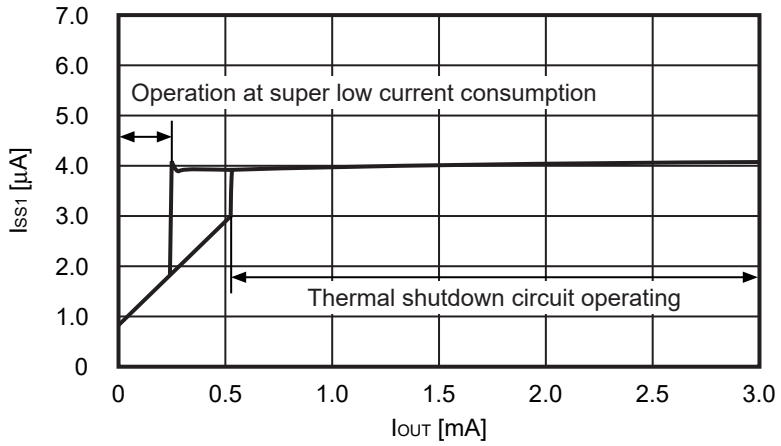

Figure 21

■ Precautions

- Wiring patterns for the VIN pin, the VOUT pin and GND should be designed so that the impedance is low. When mounting an output capacitor between the VOUT pin and the VSS pin (C_L) and a capacitor for stabilizing the input between the VIN pin and the VSS pin (C_{IN}), the distance from the capacitors to these pins should be as short as possible.
- Note that generally the output voltage may increase when a series regulator is used at low load current (10 μA or less).
- Note that generally the output voltage may increase due to the leakage current from an output driver when a series regulator is used at high temperature.
- Note that the output voltage may increase due to the leakage current from an output driver even if the ON / OFF pin is at OFF level when a series regulator is used at high temperature.
- Generally a series regulator may cause oscillation, depending on the selection of external parts. The following conditions are recommended for the S-1313 Series. However, be sure to perform sufficient evaluation under the actual usage conditions for selection, including evaluation of temperature characteristics. Refer to "**6. Example of equivalent series resistance vs. Output current characteristics (Ta = +25°C)**" in "**■ Reference Data**" for the equivalent series resistance (R_{ESR}) of the output capacitor.

  Input capacitor (C_{IN}): 0.1 μF or more
  Output capacitor (C_L): 0.1 μF or more

- The voltage regulator may oscillate when the impedance of the power supply is high and the input capacitance is small or an input capacitor is not connected.
- Ringing may occur when these three conditions below are satisfied. Before selecting an input capacitor, be sure to evaluate sufficiently under the actual usage conditions, including the temperature characteristics.

  The power supply inductance is high.
  The load current is 100 mA or more.
  The difference between the input voltage and the output voltage is close to the value of dropout voltage.

- If the output capacitance is small, power supply's fluctuation and the characteristics of load fluctuation become worse. Sufficiently evaluate the output voltage's fluctuation with the actual device.
- Overshoot may occur in the output voltage momentarily if the voltage is rapidly raised at power-on or when the power supply fluctuates. Sufficiently evaluate the output voltage at power-on with the actual device.
- The application conditions for the input voltage, the output voltage, and the load current should not exceed the package power dissipation.
- Do not apply an electrostatic discharge to this IC that exceeds the performance ratings of the built-in electrostatic protection circuit.
- In determining the output current, attention should be paid to the output current value specified in **Table 13** in "**■ Electrical Characteristics**" and footnote ***5** of the table.
- ABLIC Inc. claims no responsibility for any disputes arising out of or in connection with any infringement by products including this IC of patents owned by a third party.

■ Characteristics (Typical Data)

1. Output voltage vs. Output current (When load current increases) (Ta = +25°C)

1. 1 V_{OUT} = 1.0 V

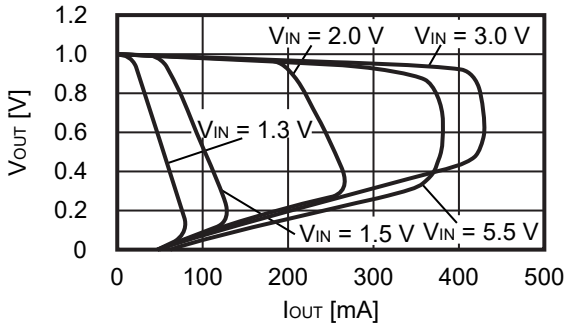

1. 2 V_{OUT} = 2.5 V

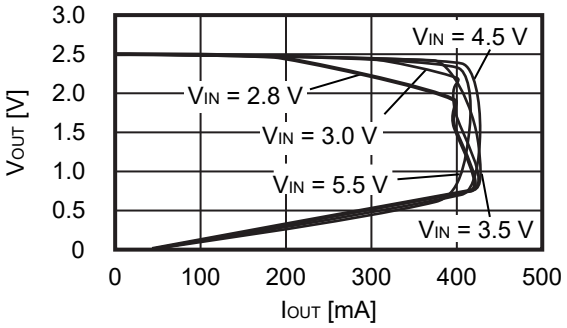

1. 3 V_{OUT} = 3.5 V

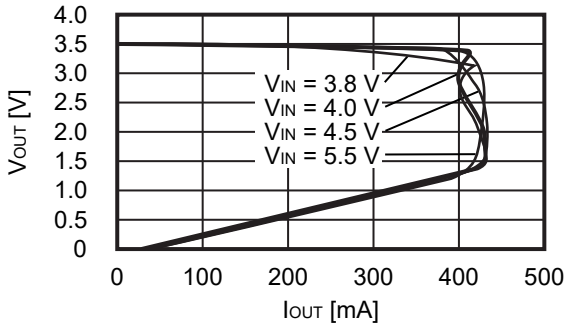

Remark In determining the output current, attention should be paid to the following.

1. The minimum output current value and footnote ***5** in **Table 13** in "■ **Electrical Characteristics**"
2. The package power dissipation

2. Output voltage vs. Input voltage (Ta = +25°C)

2. 1 V_{OUT} = 1.0 V

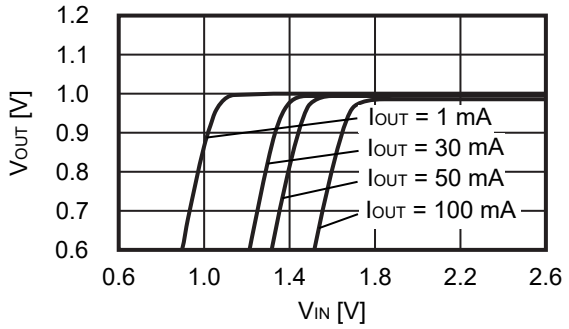

2. 2 V_{OUT} = 2.5 V

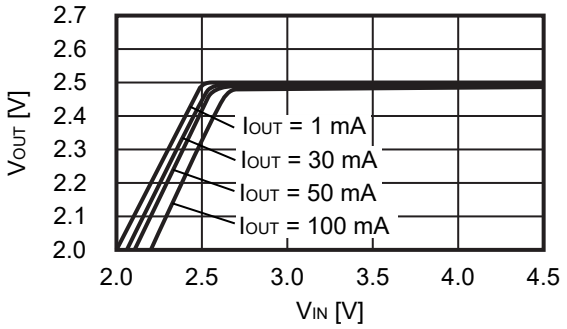

2. 3 V_{OUT} = 3.5 V

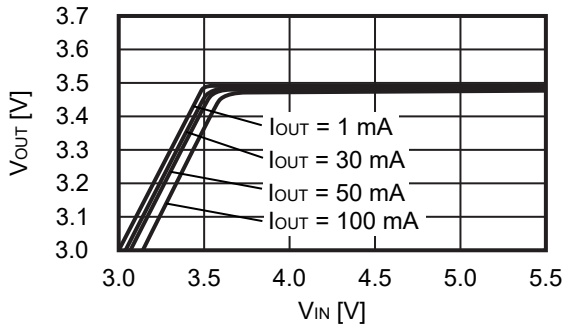

3. Dropout voltage vs. Output current

3. 1 V_{OUT} = 1.0 V

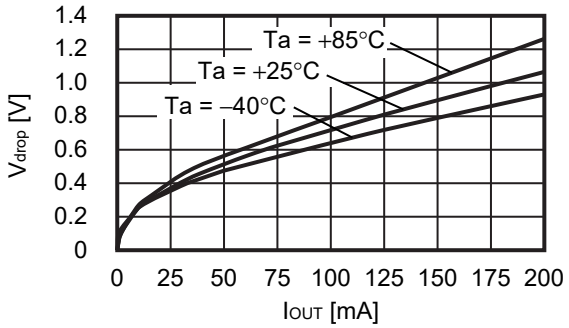

3. 2 V_{OUT} = 2.5 V

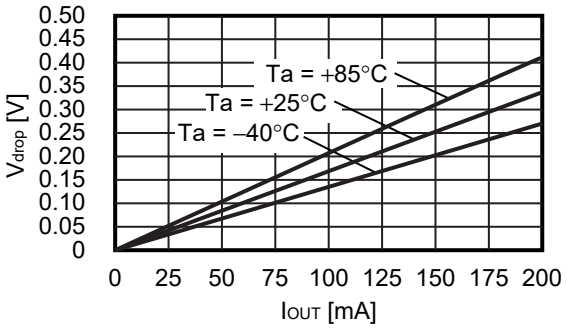

3. 3 V_{OUT} = 3.5 V

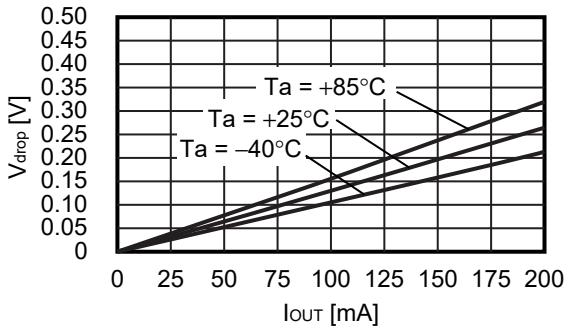

4. Dropout voltage vs. Set output voltage

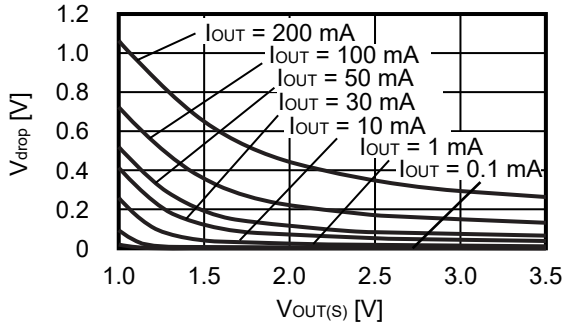

5. Output voltage vs. Ambient temperature

5. 1 V_{OUT} = 1.0 V

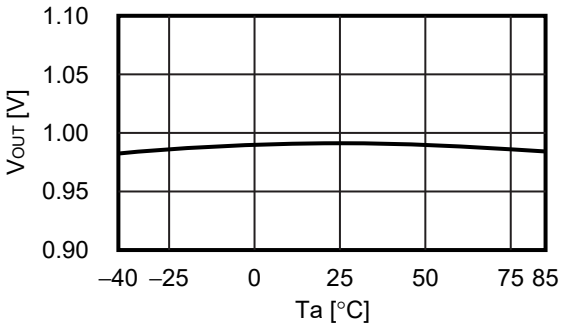

5. 2 V_{OUT} = 2.5 V

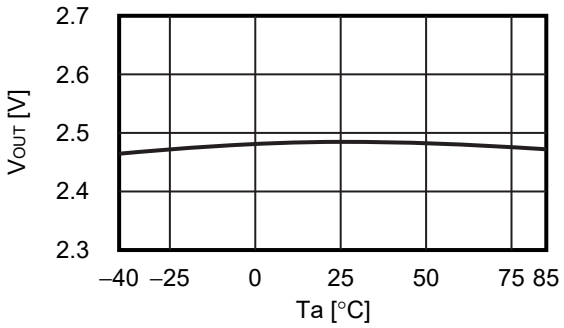

5. 3 V_{OUT} = 3.5 V

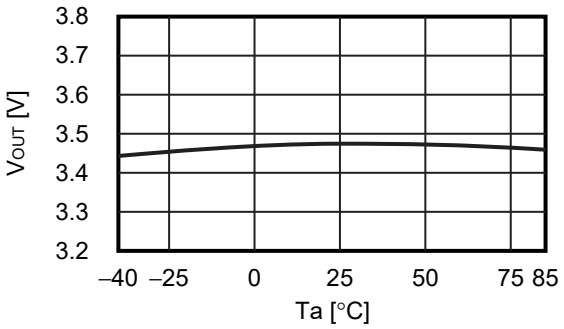

6. Current consumption vs. Input voltage

6. 1 V_{OUT} = 1.0 V

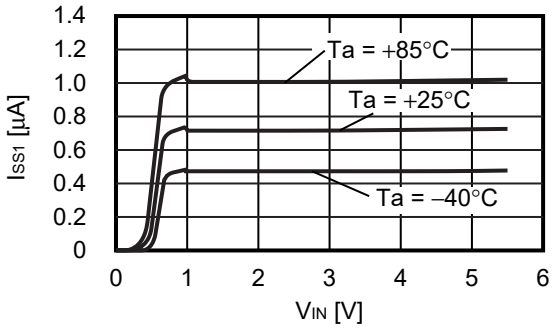

6. 2 V_{OUT} = 2.5 V

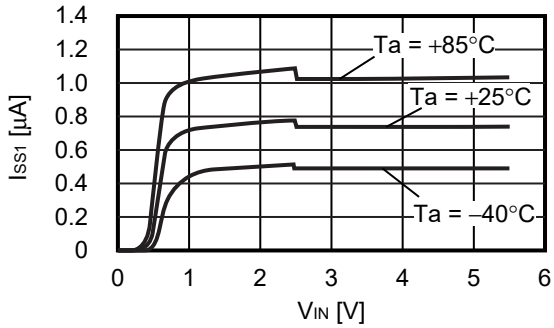

6. 3 V_{OUT} = 3.5 V

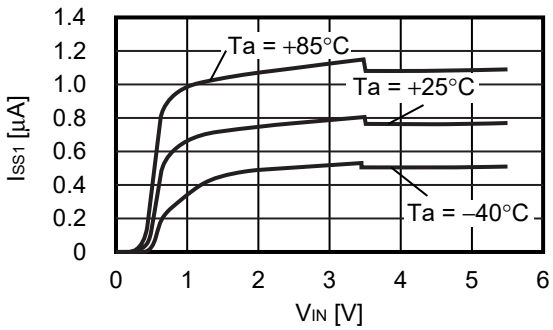

7. Current consumption vs. Ambient temperature

7. 1 V_{OUT} = 1.0 V

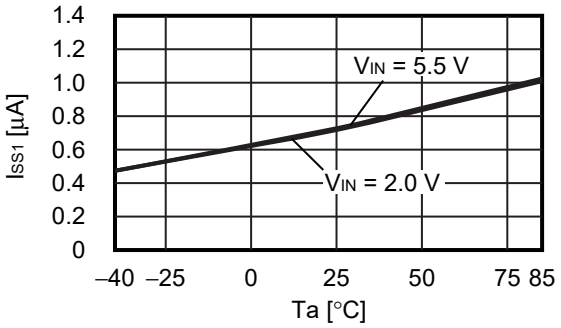

7. 2 V_{OUT} = 2.5 V

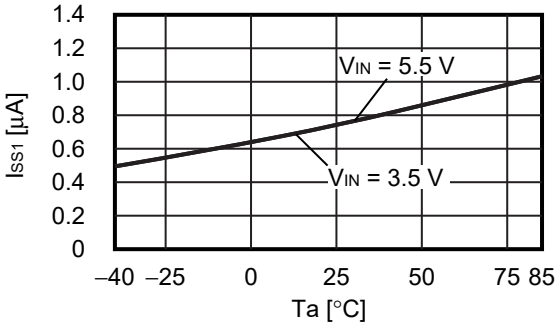

7. 3 V_{OUT} = 3.5 V

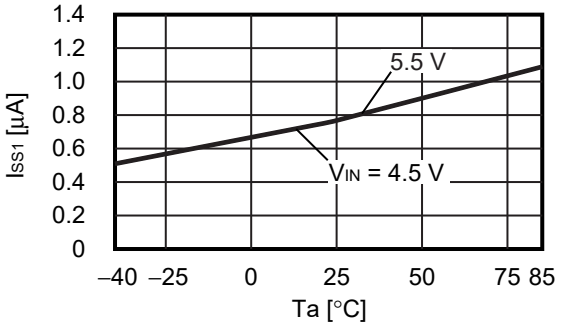

8. Current consumption vs. Output current

8. 1 V_{OUT} = 1.0 V

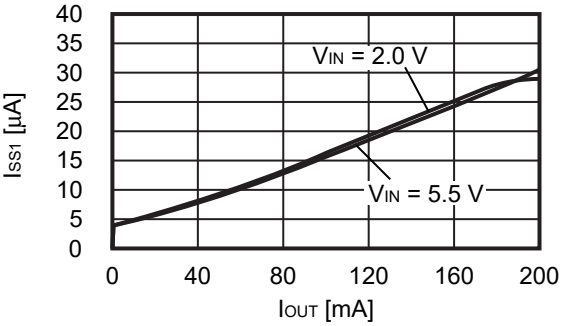

8. 2 V_{OUT} = 2.5 V

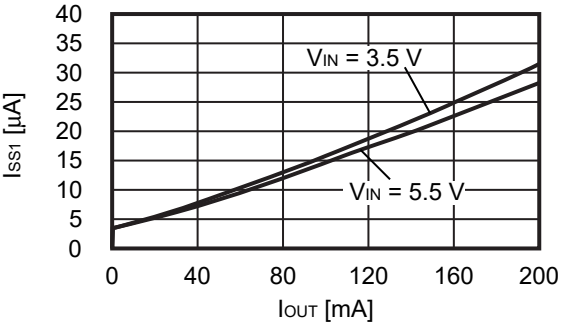

8. 3 V_{OUT} = 3.5 V

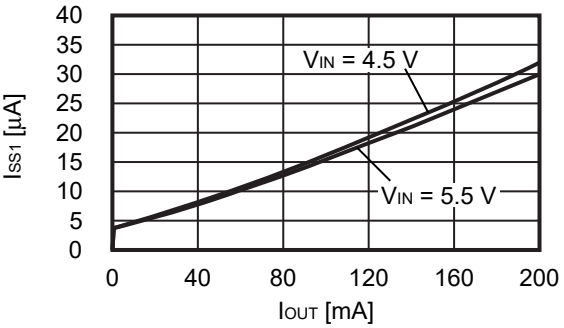

■ Reference Data

1. Transient response characteristics when input (Ta = +25°C)

1. 1 V_{OUT} = 1.0 V

I_{OUT} = 1 mA, C_{IN} = C_L = 0.1 µF, V_{IN} = 2.0 V ↔ 3.0 V, t_r = t_f = 5.0 µs

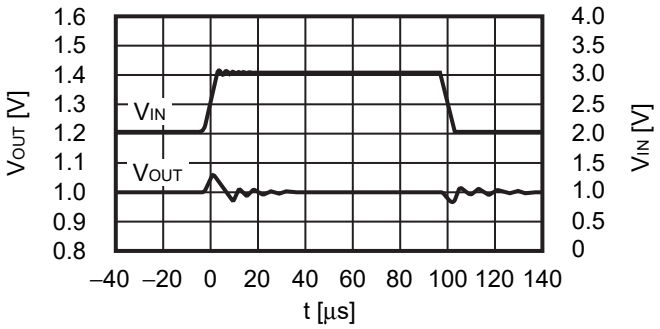

I_{OUT} = 100 mA, C_{IN} = C_L = 0.1 µF, V_{IN} = 2.0 V ↔ 3.0 V, t_r = t_f = 5.0 µs

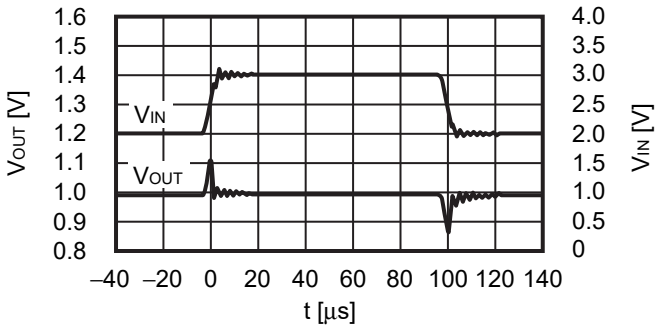

1. 2 V_{OUT} = 2.5 V

I_{OUT} = 1 mA, C_{IN} = C_L = 0.1 µF, V_{IN} = 3.5 V ↔ 4.5 V, t_r = t_f = 5.0 µs

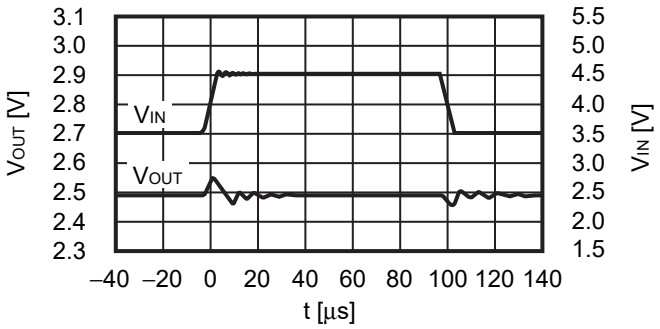

I_{OUT} = 100 mA, C_{IN} = C_L = 0.1 µF, V_{IN} = 3.5 V ↔ 4.5 V, t_r = t_f = 5.0 µs

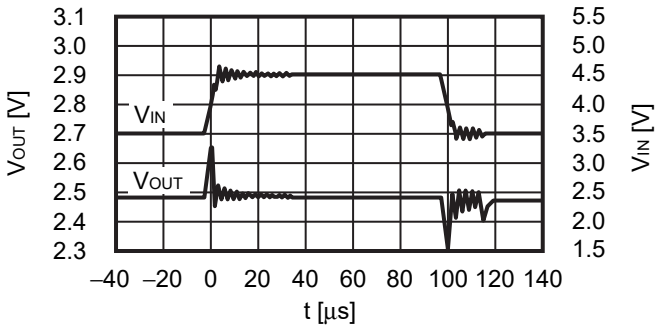

1. 3 V_{OUT} = 3.5 V

I_{OUT} = 1 mA, C_{IN} = C_L = 0.1 µF, V_{IN} = 4.5 V ↔ 5.5 V, t_r = t_f = 5.0 µs

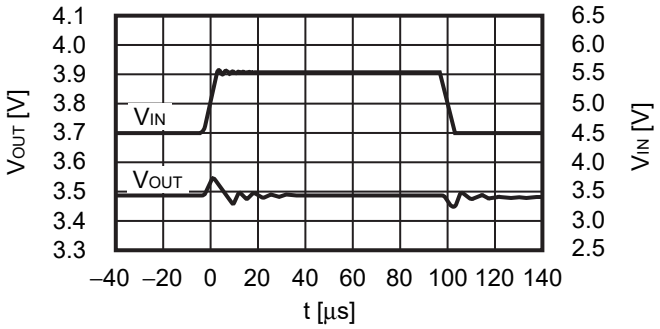

I_{OUT} = 100 mA, C_{IN} = C_L = 0.1 µF, V_{IN} = 4.5 V ↔ 5.5 V, t_r = t_f = 5.0 µs

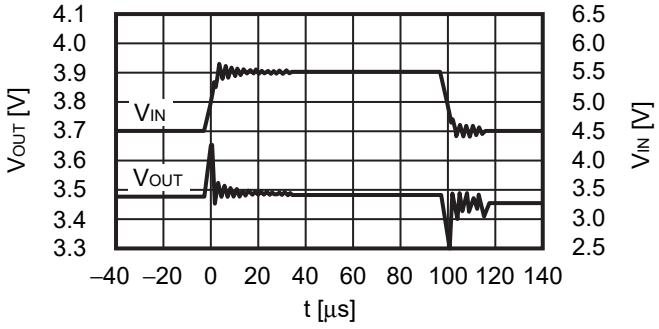

2. Transient response characteristics of load (Ta = +25°C)

2. 1 V_{OUT} = 1.0 V

V_{IN} = 2.0 V, C_{IN} = C_L = 0.1 μF, I_{OUT} = 1 mA ↔ 50 mA

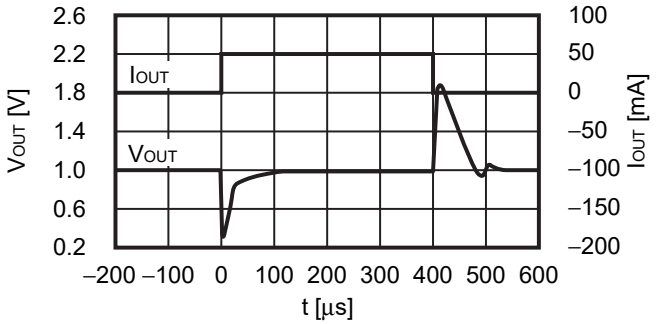

V_{IN} = 2.0 V, C_{IN} = C_L = 0.1 μF, I_{OUT} = 50 mA ↔ 100 mA

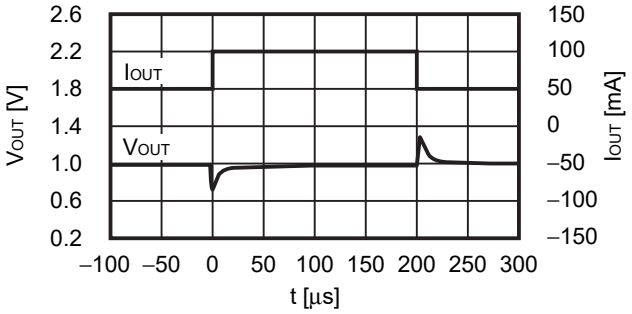

2. 2 V_{OUT} = 2.5 V

V_{IN} = 3.5 V, C_{IN} = C_L = 0.1 μF, I_{OUT} = 1 mA ↔ 50 mA

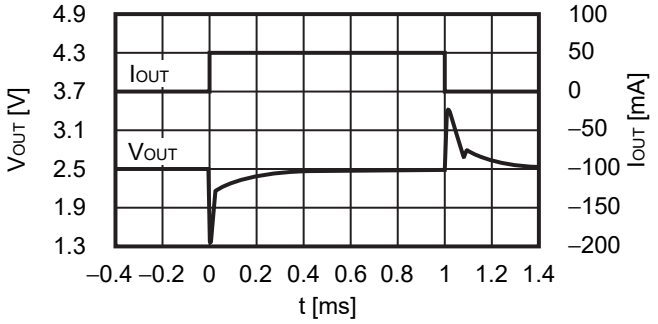

V_{IN} = 3.5 V, C_{IN} = C_L = 0.1 μF, I_{OUT} = 50 mA ↔ 100 mA

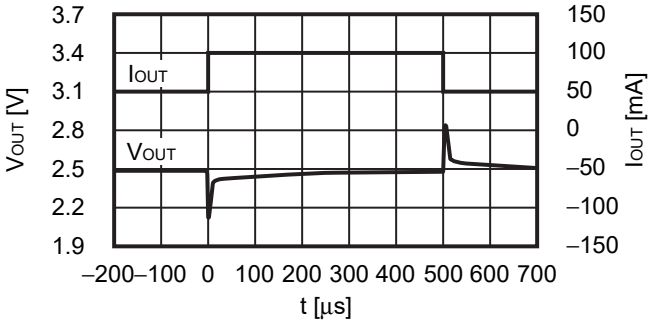

2. 3 V_{OUT} = 3.5 V

V_{IN} = 4.5 V, C_{IN} = C_L = 0.1 μF, I_{OUT} = 1 mA ↔ 50 mA

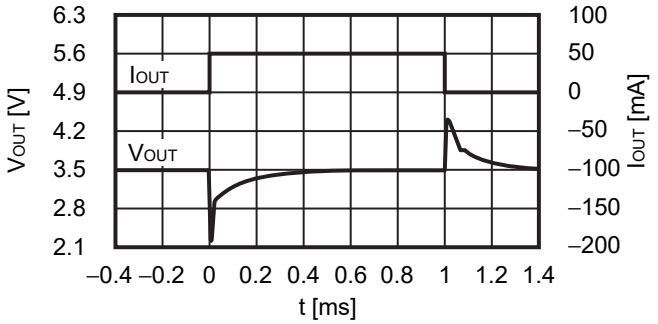

V_{IN} = 4.5 V, C_{IN} = C_L = 0.1 μF, I_{OUT} = 50 mA ↔ 100 mA

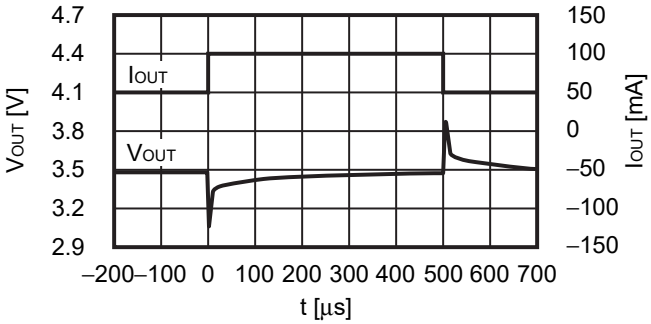

3. Transient response characteristics of ON / OFF pin (Ta = +25°C)

3. 1 V_{OUT} = 1.0 V

V_{IN} = 2.0 V, C_{IN} = C_L = 0.1 µF, I_{OUT} = 1 mA, $V_{ON / OFF}$ = 0 V → 2 V, t_r = 1.0 µs

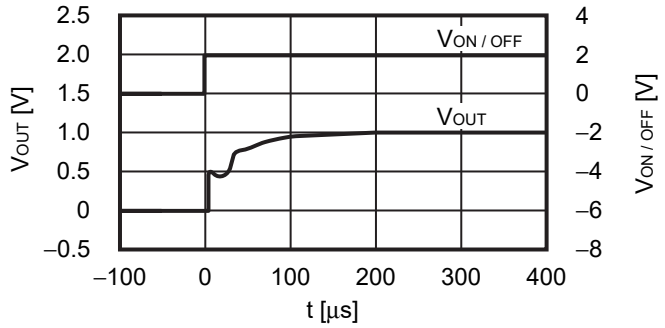

V_{IN} = 2.0 V, C_{IN} = C_L = 0.1 µF, I_{OUT} = 100 mA, $V_{ON / OFF}$ = 0 V → 2 V, t_r = 1.0 µs

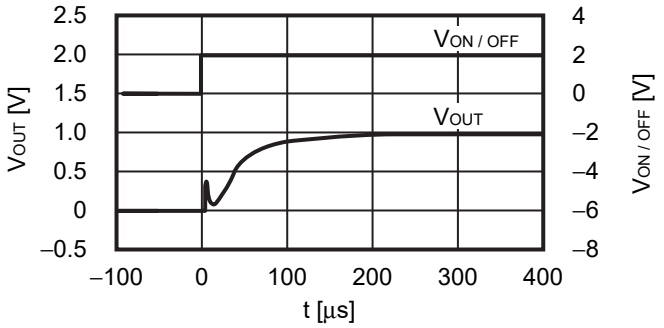

3. 2 V_{OUT} = 2.5 V

V_{IN} = 3.5 V, C_{IN} = C_L = 0.1 µF, I_{OUT} = 1 mA, $V_{ON / OFF}$ = 0 V → 3.5 V, t_r = 1.0 µs

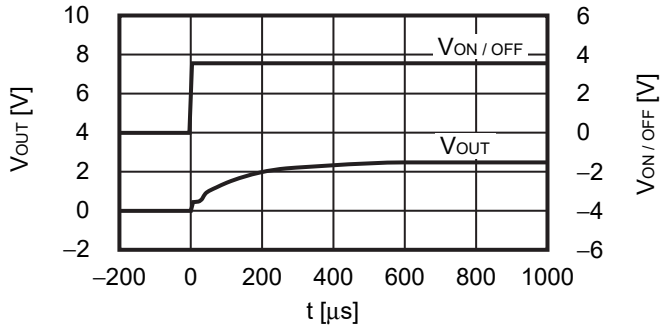

V_{IN} = 3.5 V, C_{IN} = C_L = 0.1 µF, I_{OUT} = 100 mA, $V_{ON / OFF}$ = 0 V → 3.5 V, t_r = 1.0 µs

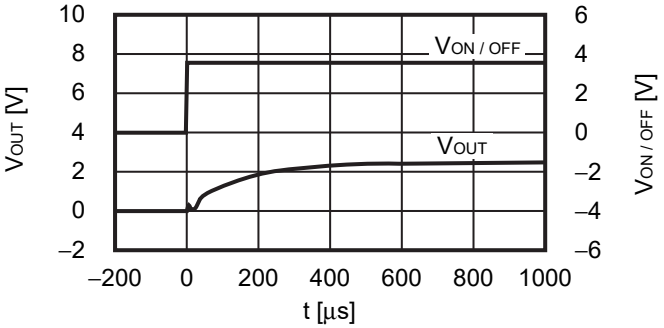

3. 3 V_{OUT} = 3.5 V

V_{IN} = 4.5 V, C_{IN} = C_L = 0.1 µF, I_{OUT} = 1 mA, $V_{ON / OFF}$ = 0 V → 4.5 V, t_r = 1.0 µs

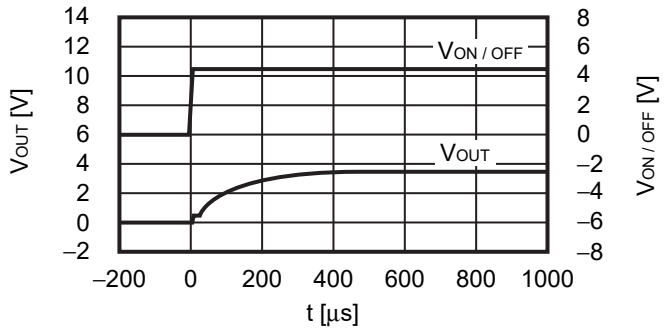

V_{IN} = 4.5 V, C_{IN} = C_L = 0.1 µF, I_{OUT} = 100 mA, $V_{ON / OFF}$ = 0 V → 4.5 V, t_r = 1.0 µs

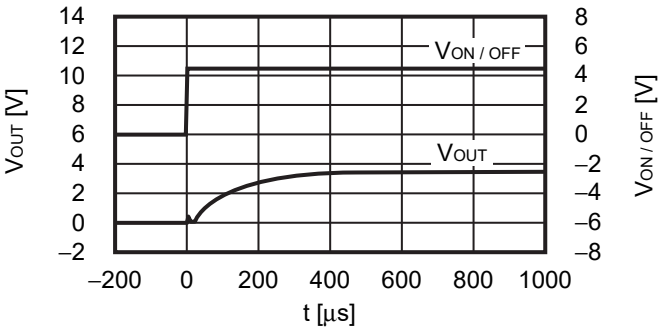

4. Output capacitance vs. Characteristics of discharge time (Ta = +25°C)

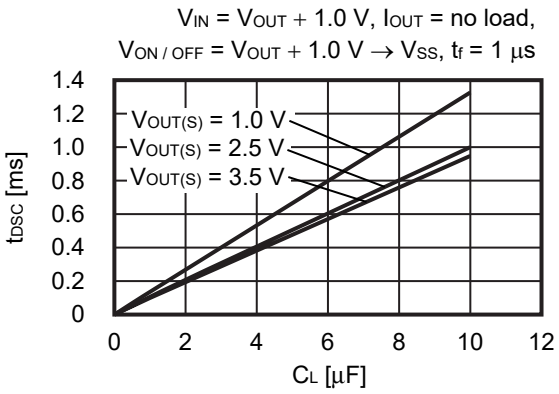

Figure 22 S-1313 Series A / B type (with discharge shunt function)

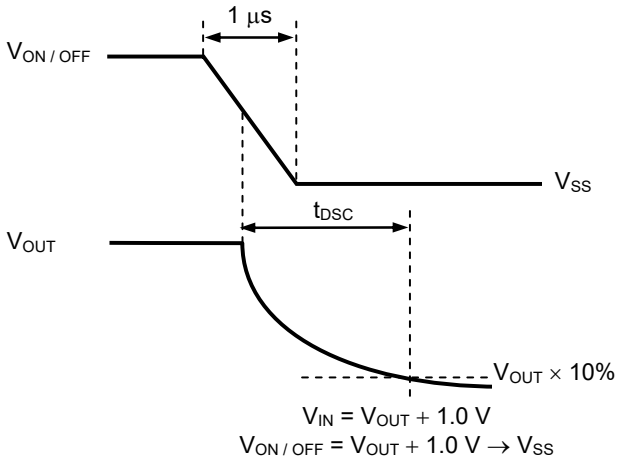

Figure 23 Measurement Condition of Discharge Time

5. Ripple rejection (Ta = +25°C)

5. 1 V_{OUT} = 1.0 V

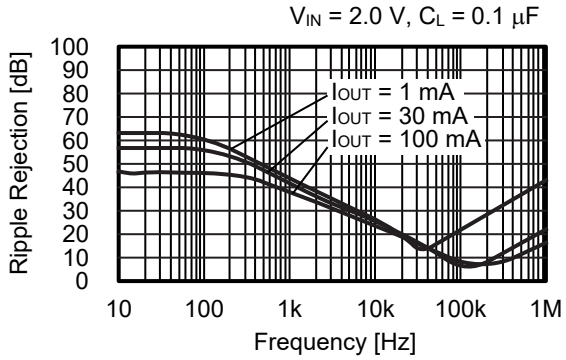

5. 2 V_{OUT} = 2.5 V

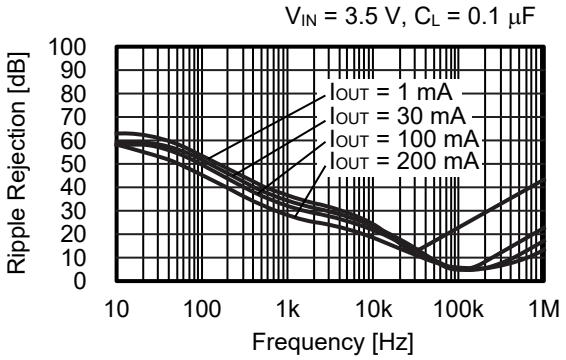

5. 3 V_{OUT} = 3.5 V

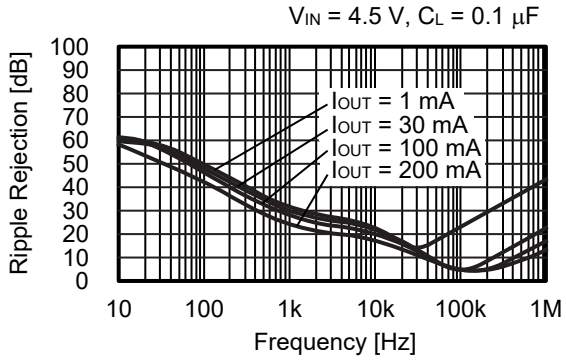

6. Example of equivalent series resistance vs. Output current characteristics (Ta = +25°C)

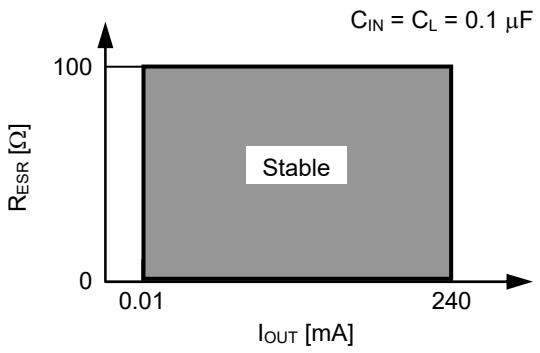

Figure 24

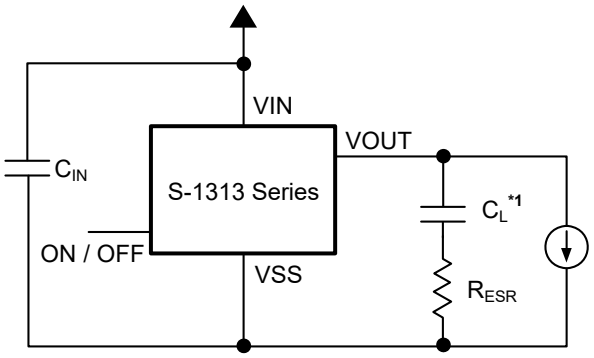

***1.** C_L: Murata Manufacturing Co., Ltd. GRM31CR72E104K (0.1 μF)

Figure 25

■ Marking Specifications

1. SOT-23-5

Top view

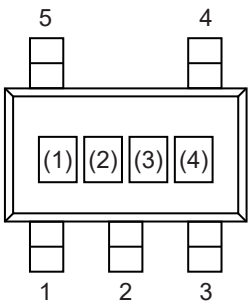

(1) to (3): Product code (Refer to **Product name vs. Product code**)
(4): Lot number

Product name vs. Product code

1. 1 S-1313 Series A type

Product Name	Product Code		
	(1)	(2)	(3)
S-1313A12-M5T1U3	1	L	C
S-1313A18-M5T1U3	1	L	J
S-1313A25-M5T1U3	1	L	S
S-1313A33-M5T1U3	1	L	3

1. 2 S-1313 Series B type

Product Name	Product Code		
	(1)	(2)	(3)
S-1313B12-M5T1U3	1	N	C
S-1313B18-M5T1U3	1	N	J
S-1313B25-M5T1U3	1	N	S
S-1313B33-M5T1U3	1	N	3

1. 3 S-1313 Series C type

Product Name	Product Code		
	(1)	(2)	(3)
S-1313C12-M5T1U3	1	O	C
S-1313C18-M5T1U3	1	O	J
S-1313C25-M5T1U3	1	O	S
S-1313C33-M5T1U3	1	O	3

1. 4 S-1313 Series D type

Product Name	Product Code		
	(1)	(2)	(3)
S-1313D12-M5T1U3	1	P	C
S-1313D18-M5T1U3	1	P	J
S-1313D25-M5T1U3	1	P	S
S-1313D33-M5T1U3	1	P	3

2. SC-82AB

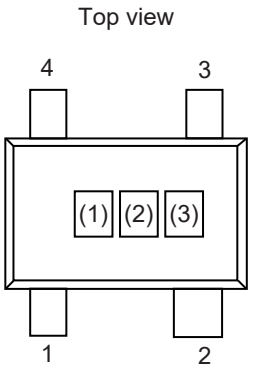

(1) to (3): Product code (Refer to **Product name vs. Product code**)

Product name vs. Product code

2. 1 S-1313 Series A type

Product Name	Product Code		
	(1)	(2)	(3)
S-1313A12-N4T1U3	1	L	C
S-1313A18-N4T1U3	1	L	J
S-1313A25-N4T1U3	1	L	S
S-1313A33-N4T1U3	1	L	3

2. 2 S-1313 Series B type

Product Name	Product Code		
	(1)	(2)	(3)
S-1313B12-N4T1U3	1	N	C
S-1313B18-N4T1U3	1	N	J
S-1313B25-N4T1U3	1	N	S
S-1313B33-N4T1U3	1	N	3

2. 3 S-1313 Series C type

Product Name	Product Code		
	(1)	(2)	(3)
S-1313C12-N4T1U3	1	O	C
S-1313C18-N4T1U3	1	O	J
S-1313C25-N4T1U3	1	O	S
S-1313C33-N4T1U3	1	O	3

2. 4 S-1313 Series D type

Product Name	Product Code		
	(1)	(2)	(3)
S-1313D12-N4T1U3	1	P	C
S-1313D18-N4T1U3	1	P	J
S-1313D25-N4T1U3	1	P	S
S-1313D33-N4T1U3	1	P	3

3. HSNT-4 (1010)

Top view

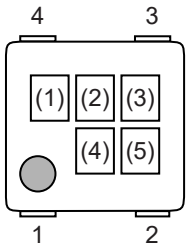

(1) to (3): Product code (Refer to **Product name vs. Product code**)
(4), (5): Lot number

Product name vs. Product code

3. 1 S-1313 Series A type

Product Name	Product Code		
	(1)	(2)	(3)
S-1313A12-A4T2U3	1	L	C
S-1313A18-A4T2U3	1	L	J
S-1313A25-A4T2U3	1	L	S
S-1313A33-A4T2U3	1	L	3

3. 2 S-1313 Series B type

Product Name	Product Code		
	(1)	(2)	(3)
S-1313B12-A4T2U3	1	N	C
S-1313B18-A4T2U3	1	N	J
S-1313B25-A4T2U3	1	N	S
S-1313B33-A4T2U3	1	N	3

3. 3 S-1313 Series C type

Product Name	Product Code		
	(1)	(2)	(3)
S-1313C12-A4T2U3	1	O	C
S-1313C18-A4T2U3	1	O	J
S-1313C25-A4T2U3	1	O	S
S-1313C33-A4T2U3	1	O	3

3. 4 S-1313 Series D type

Product Name	Product Code		
	(1)	(2)	(3)
S-1313D12-A4T2U3	1	P	C
S-1313D18-A4T2U3	1	P	J
S-1313D25-A4T2U3	1	P	S
S-1313D33-A4T2U3	1	P	3

4. HSNT-4 (0808)

Top view

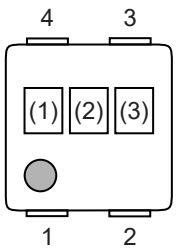

(1) to (3): Product code (Refer to **Product name vs. Product code**)

Product name vs. Product code

4. 1 S-1313 Series A type

Product Name	Product Code		
	(1)	(2)	(3)
S-1313A12-A4T1U3	1	L	C
S-1313A18-A4T1U3	1	L	J
S-1313A25-A4T1U3	1	L	S
S-1313A33-A4T1U3	1	L	3

4. 2 S-1313 Series B type

Product Name	Product Code		
	(1)	(2)	(3)
S-1313B12-A4T1U3	1	N	C
S-1313B18-A4T1U3	1	N	J
S-1313B25-A4T1U3	1	N	S
S-1313B33-A4T1U3	1	N	3

4. 3 S-1313 Series C type

Product Name	Product Code		
	(1)	(2)	(3)
S-1313C12-A4T1U3	1	O	C
S-1313C18-A4T1U3	1	O	J
S-1313C25-A4T1U3	1	O	S
S-1313C33-A4T1U3	1	O	3

4. 4 S-1313 Series D type

Product Name	Product Code		
	(1)	(2)	(3)
S-1313D12-A4T1U3	1	P	C
S-1313D18-A4T1U3	1	P	J
S-1313D25-A4T1U3	1	P	S
S-1313D33-A4T1U3	1	P	3

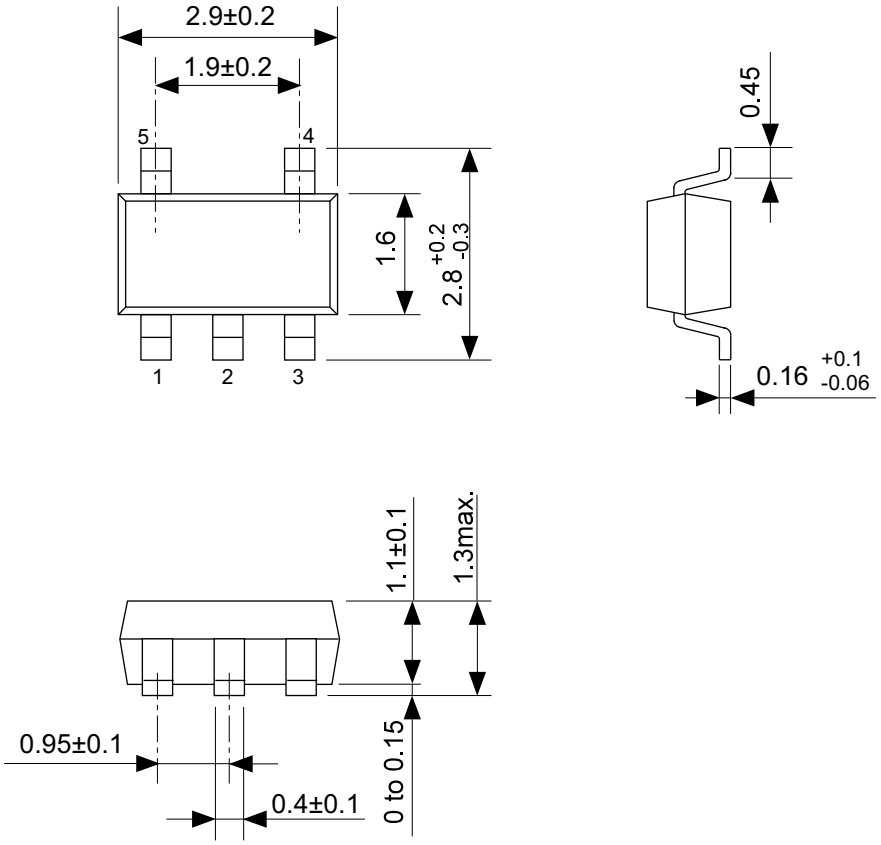

No. MP005-A-P-SD-1.3

TITLE	SOT235-A-PKG Dimensions
No.	MP005-A-P-SD-1.3
ANGLE	
UNIT	mm

ABLIC Inc.

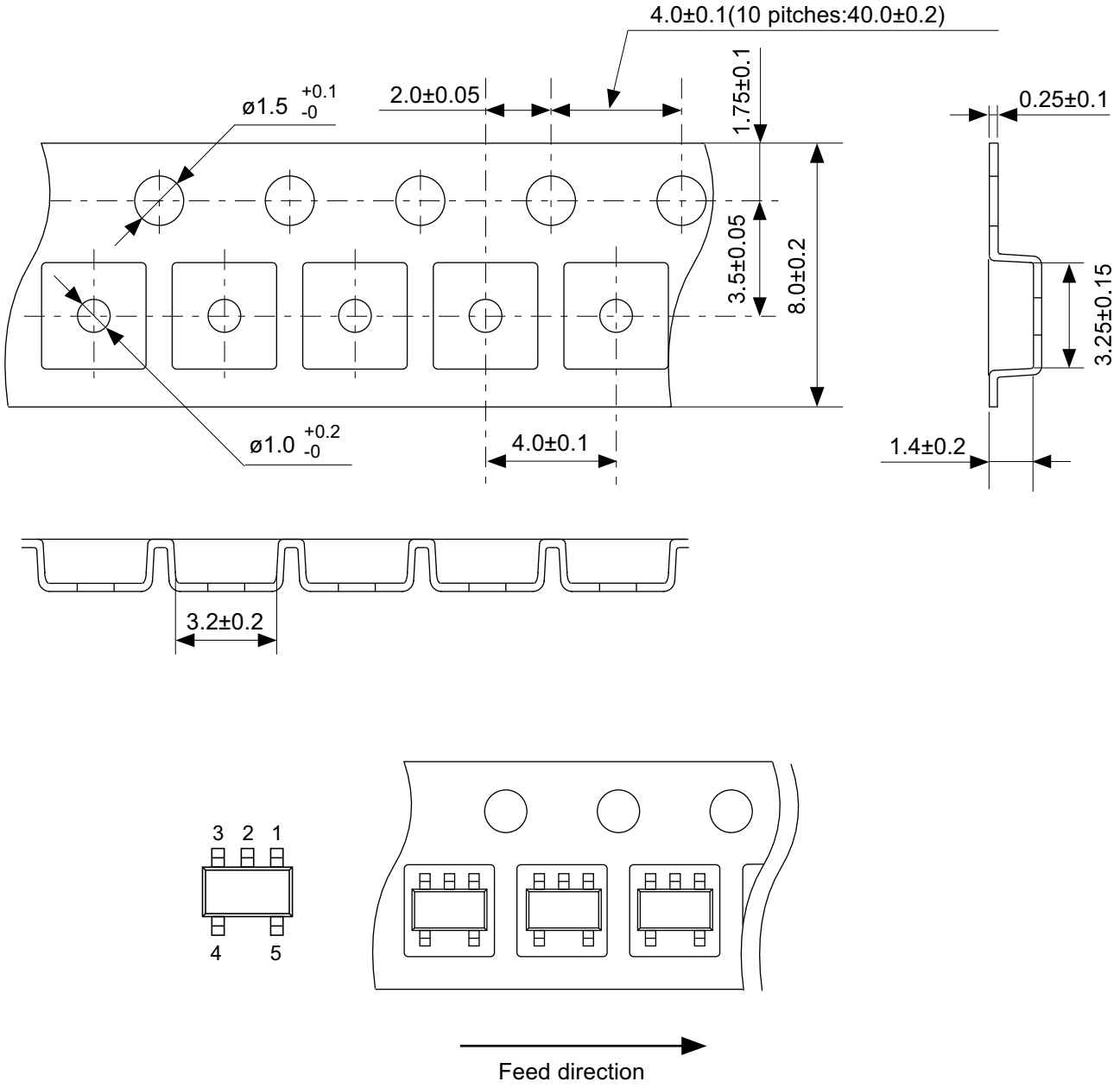

No. MP005-A-C-SD-2.1

TITLE	SOT235-A-Carrier Tape
No.	MP005-A-C-SD-2.1
ANGLE	
UNIT	mm
ABLIC Inc.	

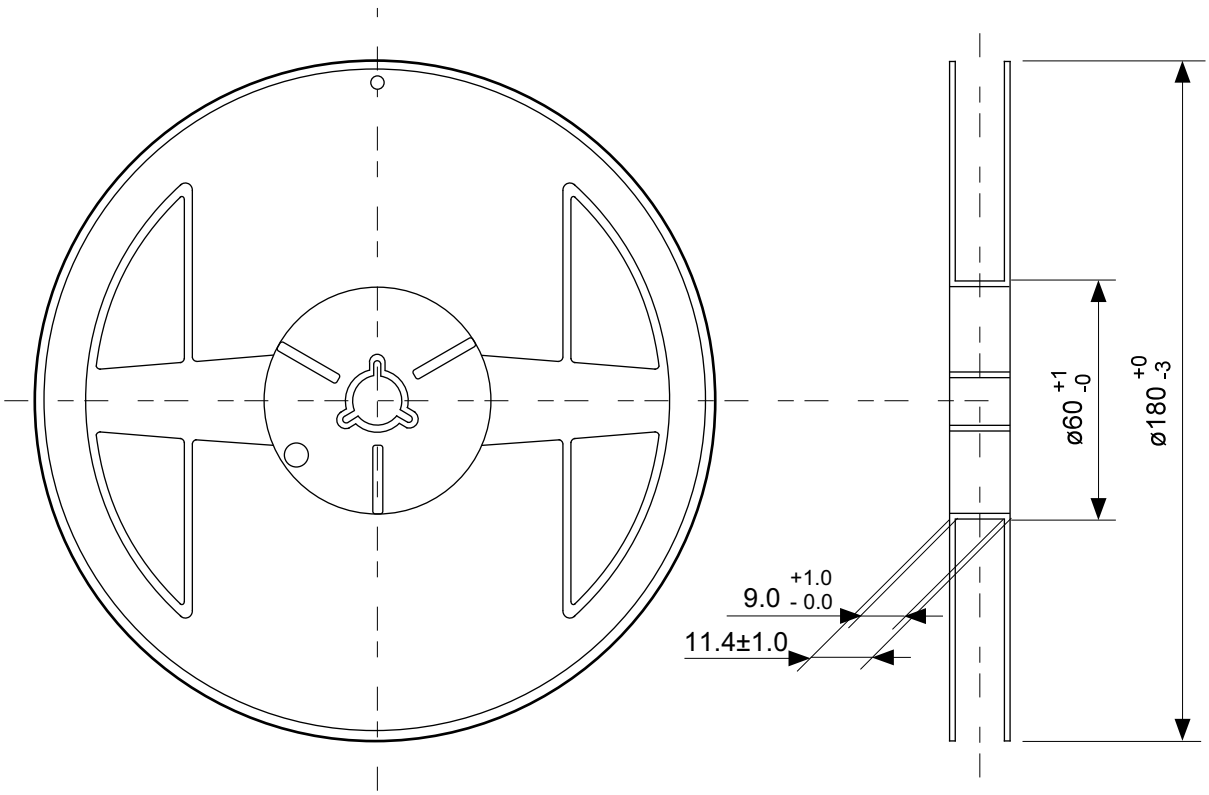

Enlarged drawing in the central part

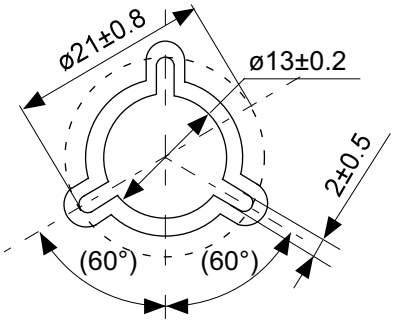

No. MP005-A-R-SD-2.0

TITLE	SOT235-A-Reel		
No.	MP005-A-R-SD-2.0		
ANGLE		QTY.	3,000
UNIT	mm		
ABLIC Inc.			

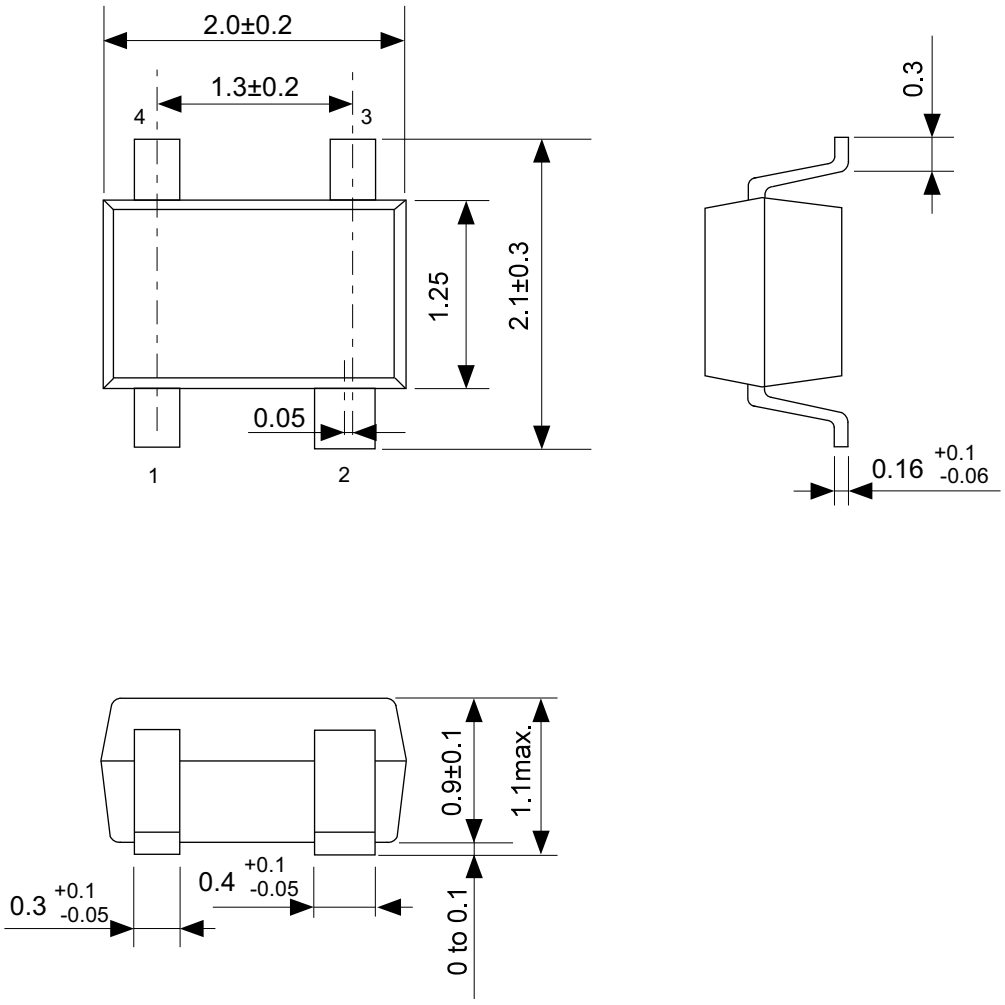

No. NP004-A-P-SD-2.0

TITLE	SC82AB-A-PKG Dimensions
No.	NP004-A-P-SD-2.0
ANGLE	
UNIT	mm

ABLIC Inc.

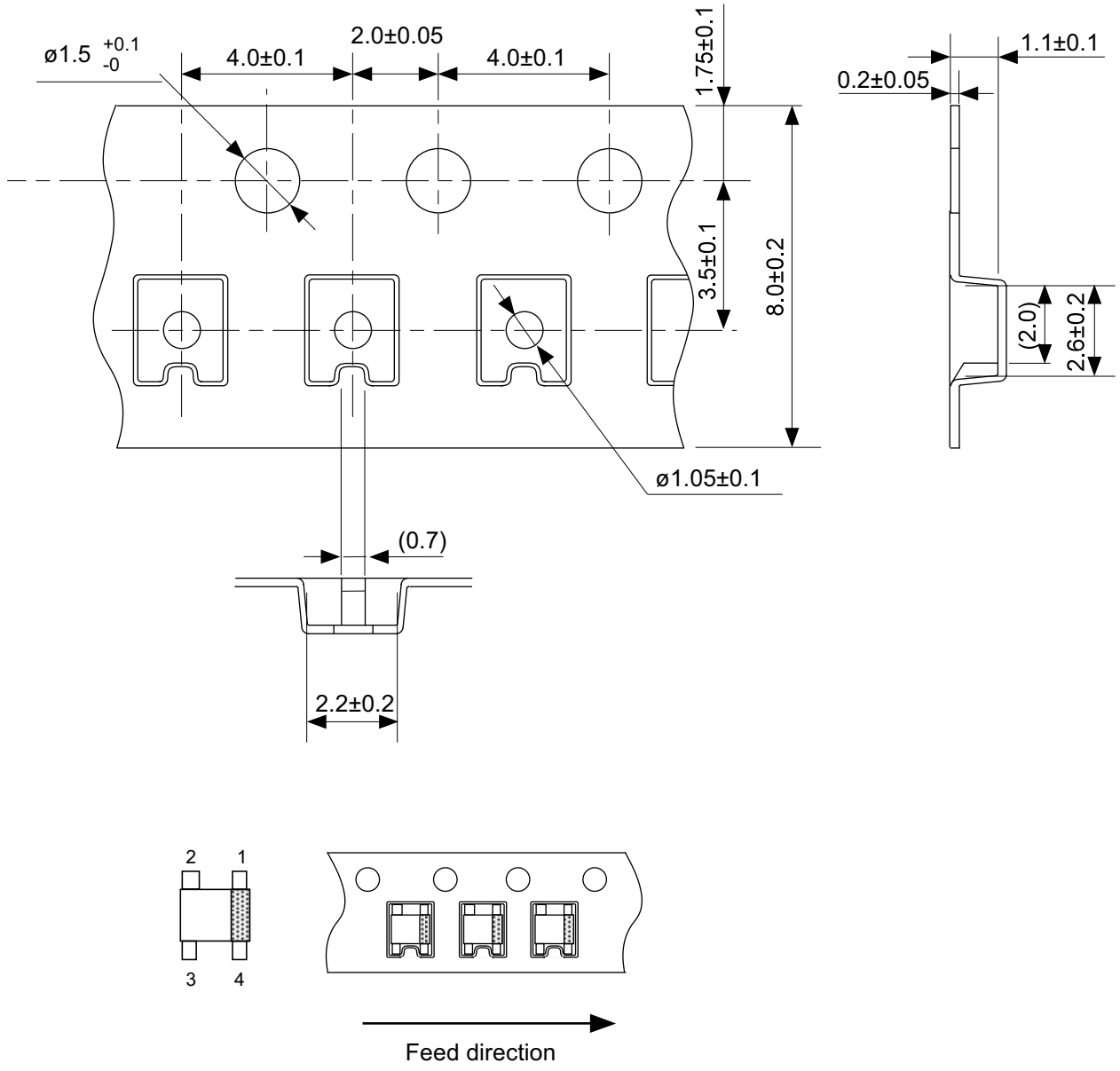

No. NP004-A-C-SD-3.0

TITLE	SC82AB-A-Carrier Tape
No.	NP004-A-C-SD-3.0
ANGLE	
UNIT	mm
	ABLIC Inc.

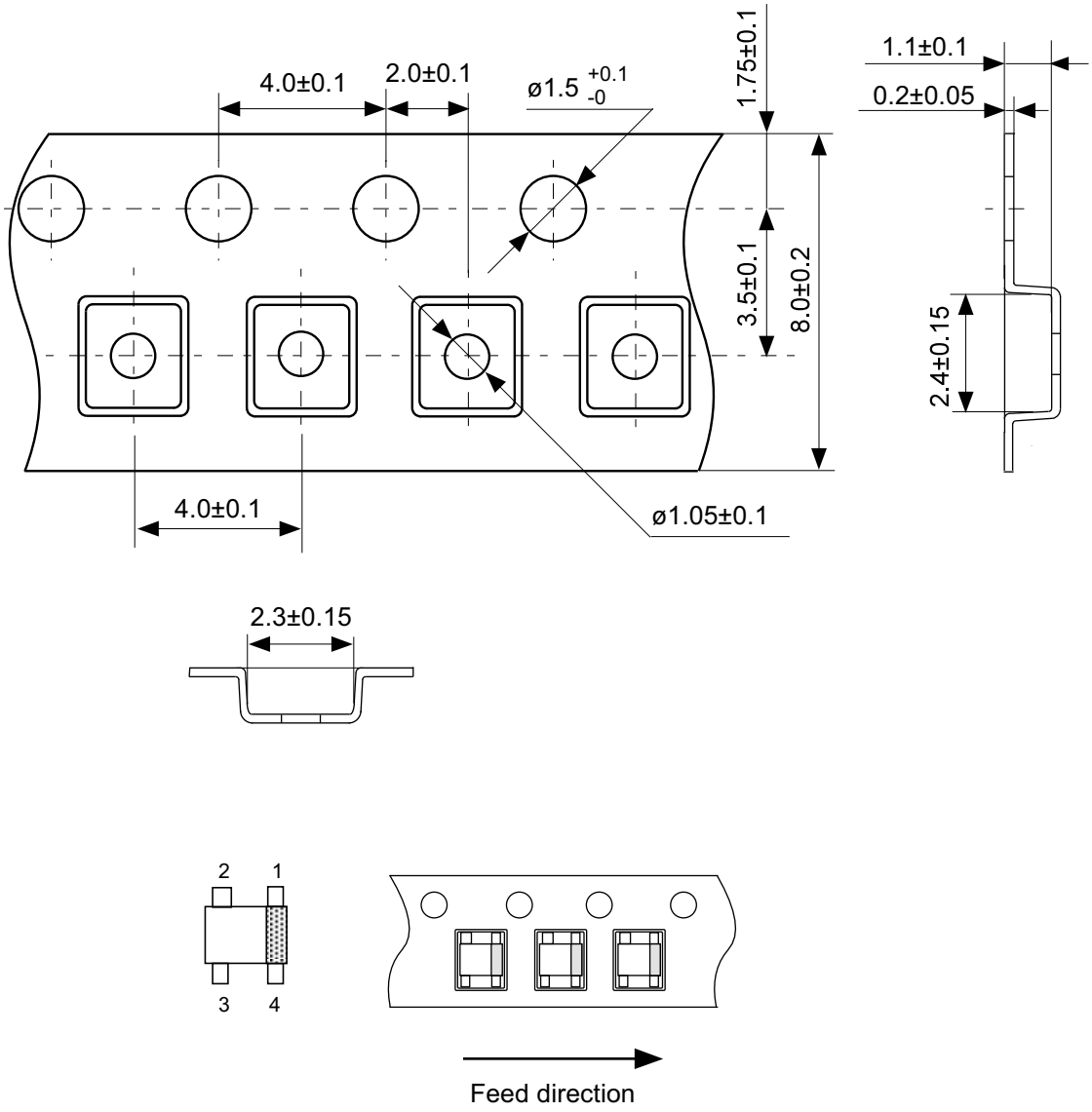

No. NP004-A-C-S1-2.0

TITLE	SC82AB-A-Carrier Tape
No.	NP004-A-C-S1-2.0
ANGLE	
UNIT	mm
	ABLIC Inc.

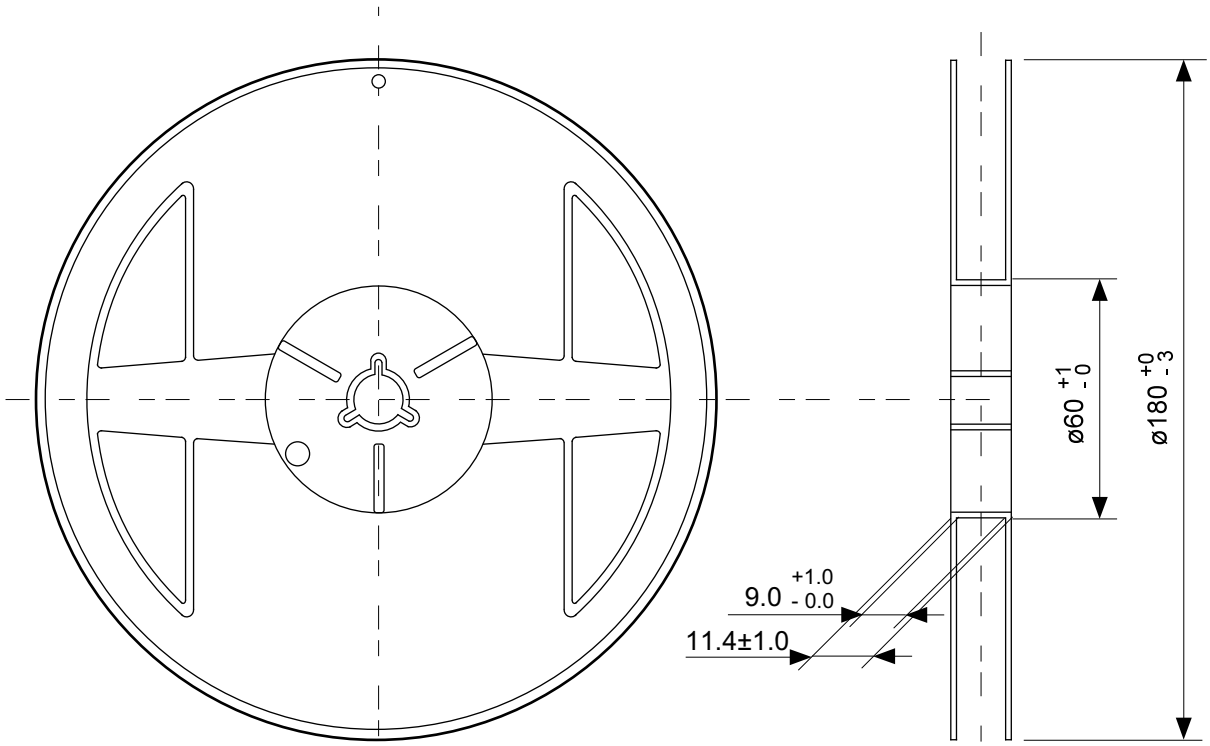

Enlarged drawing in the central part

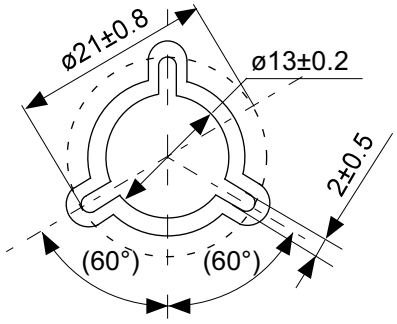

No. NP004-A-R-SD-2.0

TITLE	SC82AB-A-Reel		
No.	NP004-A-R-SD-2.0		
ANGLE		QTY.	3,000
UNIT	mm		
	ABLIC Inc.		

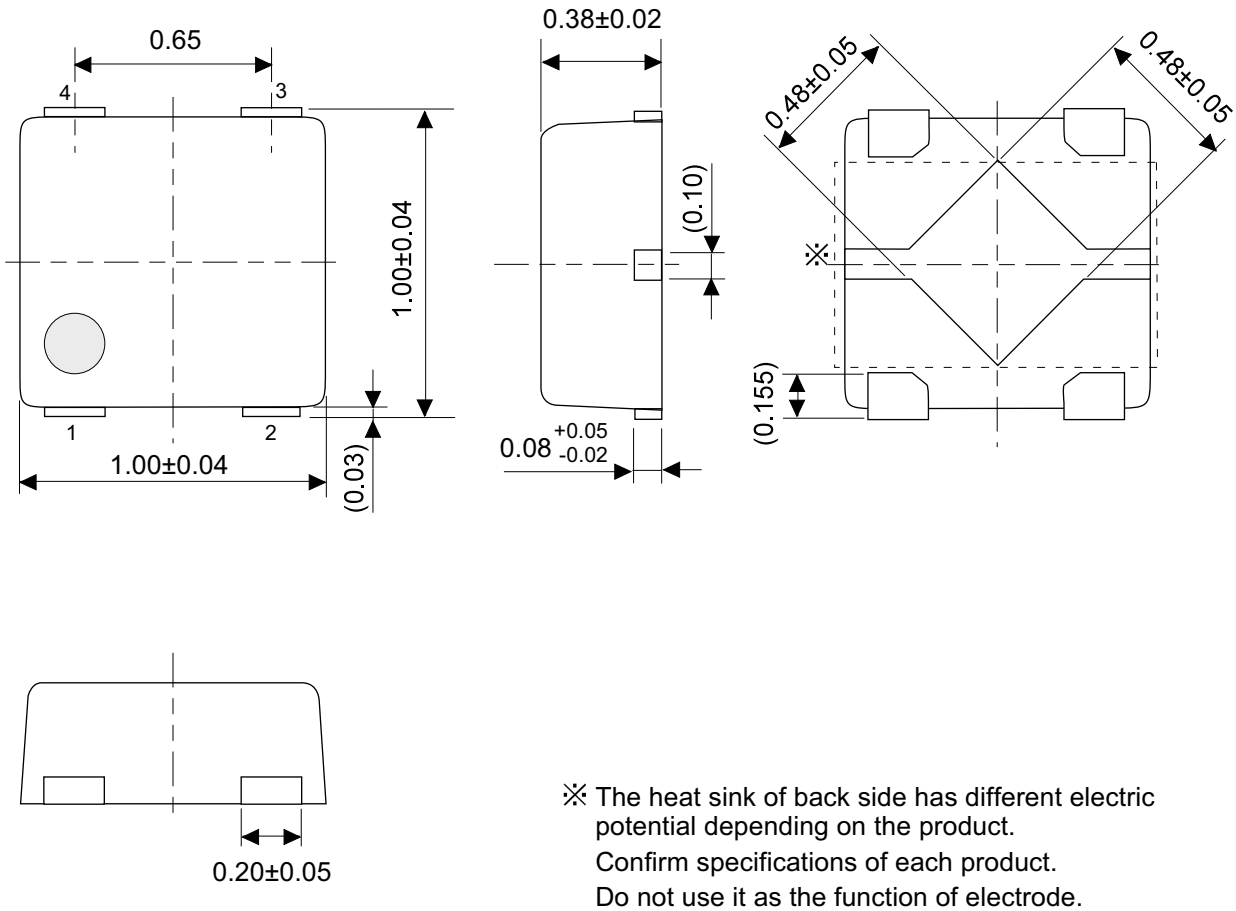

※ The heat sink of back side has different electric potential depending on the product.
Confirm specifications of each product.
Do not use it as the function of electrode.

No. PL004-A-P-SD-1.1

TITLE	HSNT-4-B-PKG Dimensions
No.	PL004-A-P-SD-1.1
ANGLE	
UNIT	mm
ABLIC Inc.	

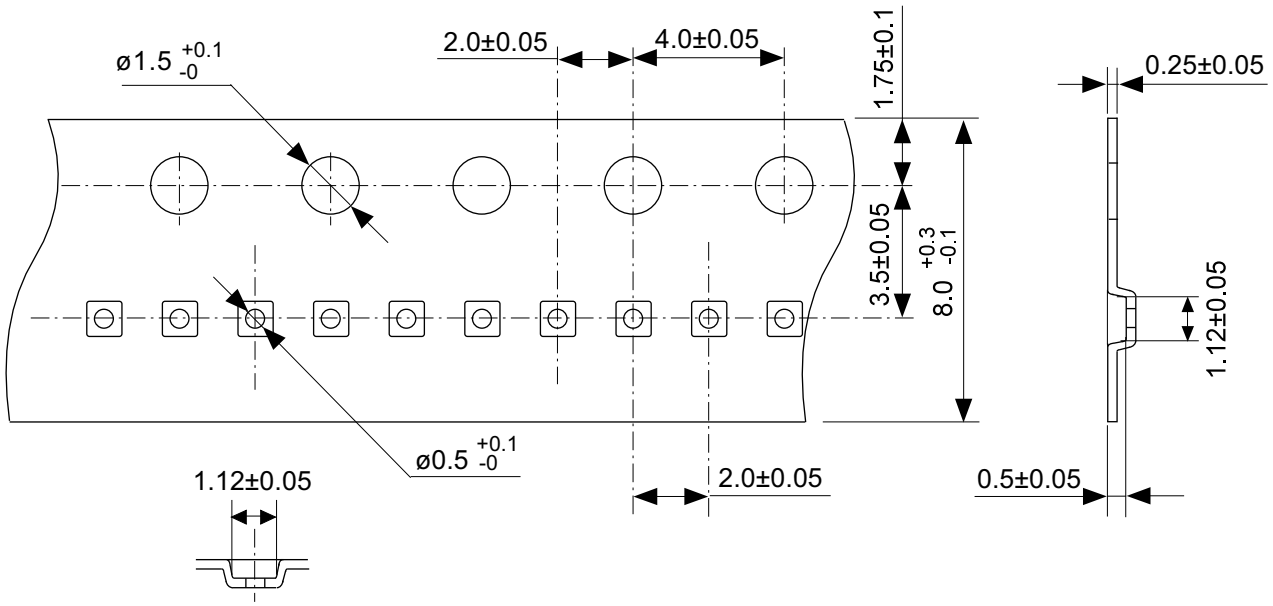

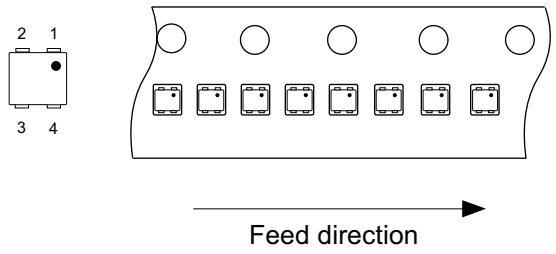

No. PL004-A-C-SD-2.0

TITLE	HSNT-4-B-Carrier Tape
No.	PL004-A-C-SD-2.0
ANGLE	
UNIT	mm
ABLIC Inc.	

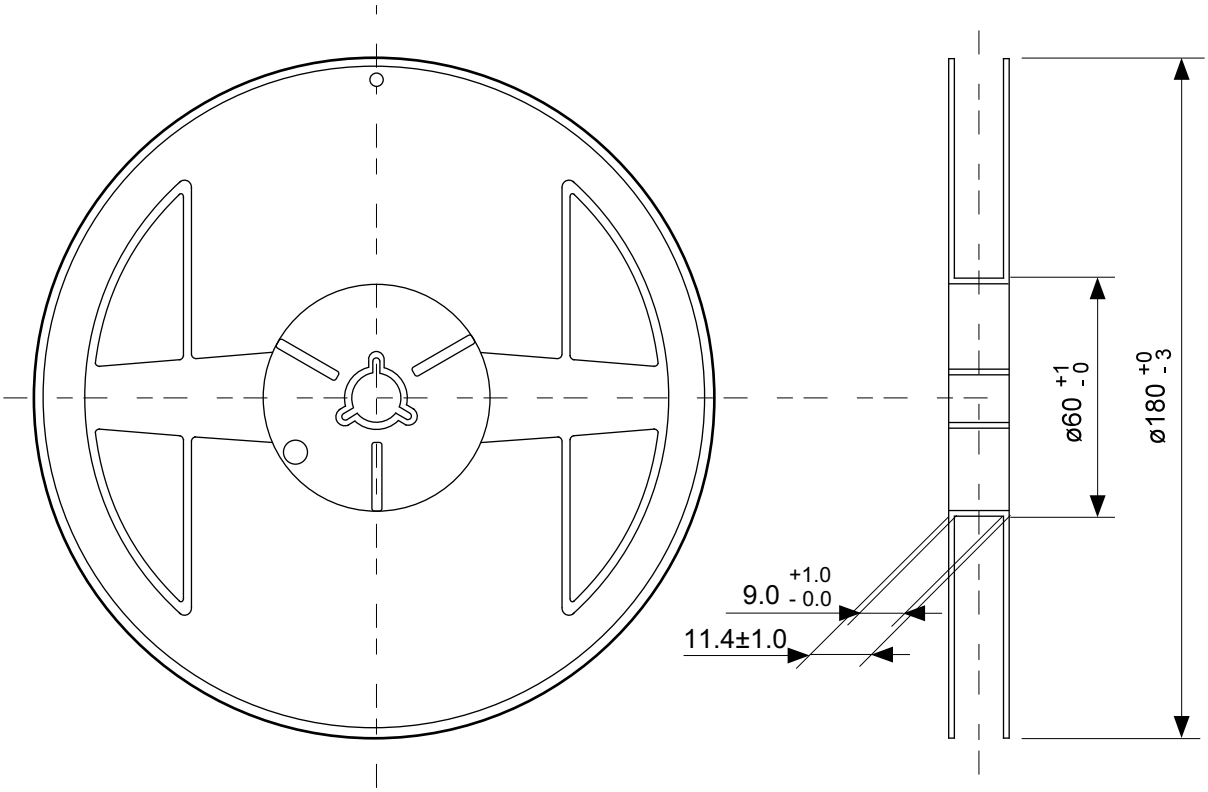

Enlarged drawing in the central part

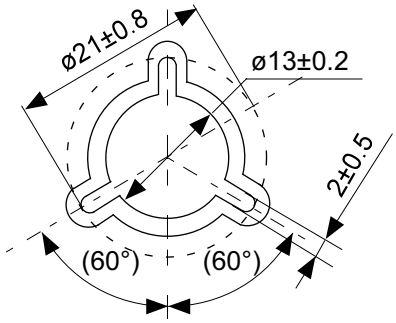

No. PL004-A-R-SD-2.0

TITLE	HSNT-4-B-Reel		
No.	PL004-A-R-SD-2.0		
ANGLE		QTY.	10,000
UNIT	mm		
ABLIC Inc.			

Land Pattern

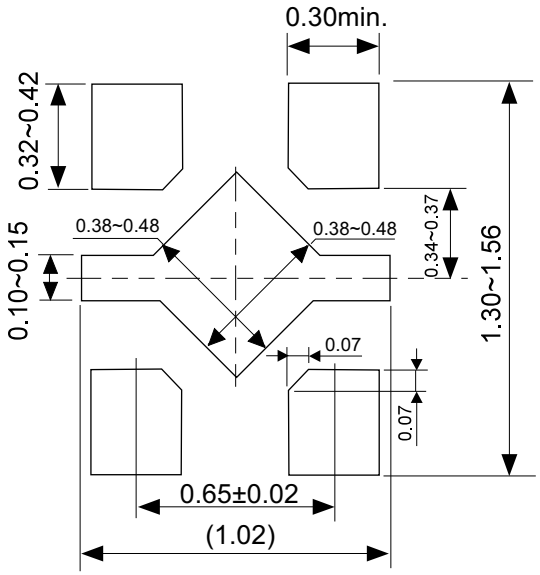

Caution It is recommended to solder the heat sink to a board in order to ensure the heat radiation.

注意　放熱性を確保する為に、PKGの裏面放熱板（ヒートシンク）を基板に半田付けする事を推奨いたします。

Metal Mask Pattern

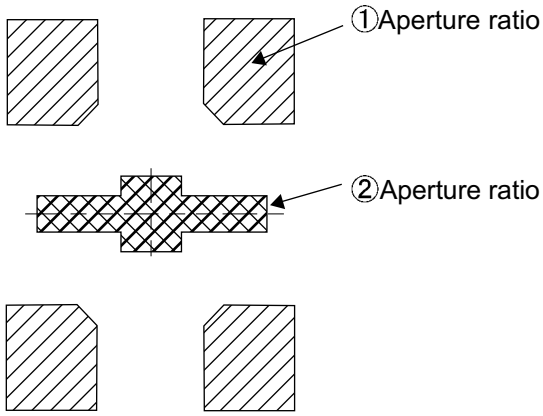

Caution ① Mask aperture ratio of the lead mounting part is 100%.
② Mask aperture ratio of the heat sink mounting part is 40%.
③ Mask thickness: t0.10mm to 0.12 mm

注意　①リード実装部のマスク開口率は100%です。
②放熱板実装のマスク開口率は40%です。
③マスク厚み：t0.10mm ~ 0.12 mm

No. PL004-A-L-SD-2.0

TITLE	HSNT-4-B -Land Recommendation
No.	PL004-A-L-SD-2.0
ANGLE	
UNIT	mm
	ABLIC Inc.

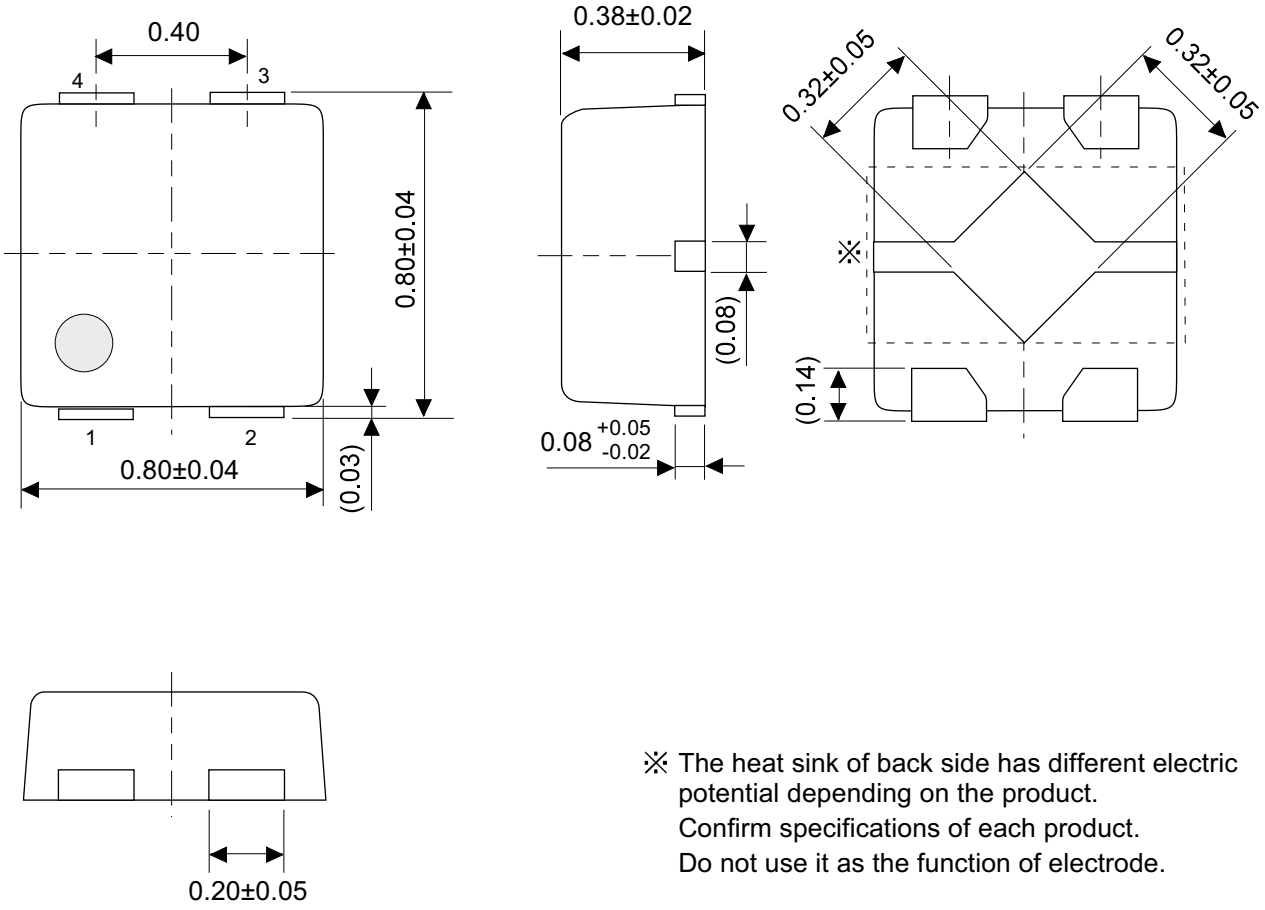

※ The heat sink of back side has different electric potential depending on the product.
Confirm specifications of each product.
Do not use it as the function of electrode.

No. PK004-A-P-SD-2.1

TITLE	HSNT-4-A-PKG Dimensions
No.	PK004-A-P-SD-2.1
ANGLE	
UNIT	mm
ABLIC Inc.	

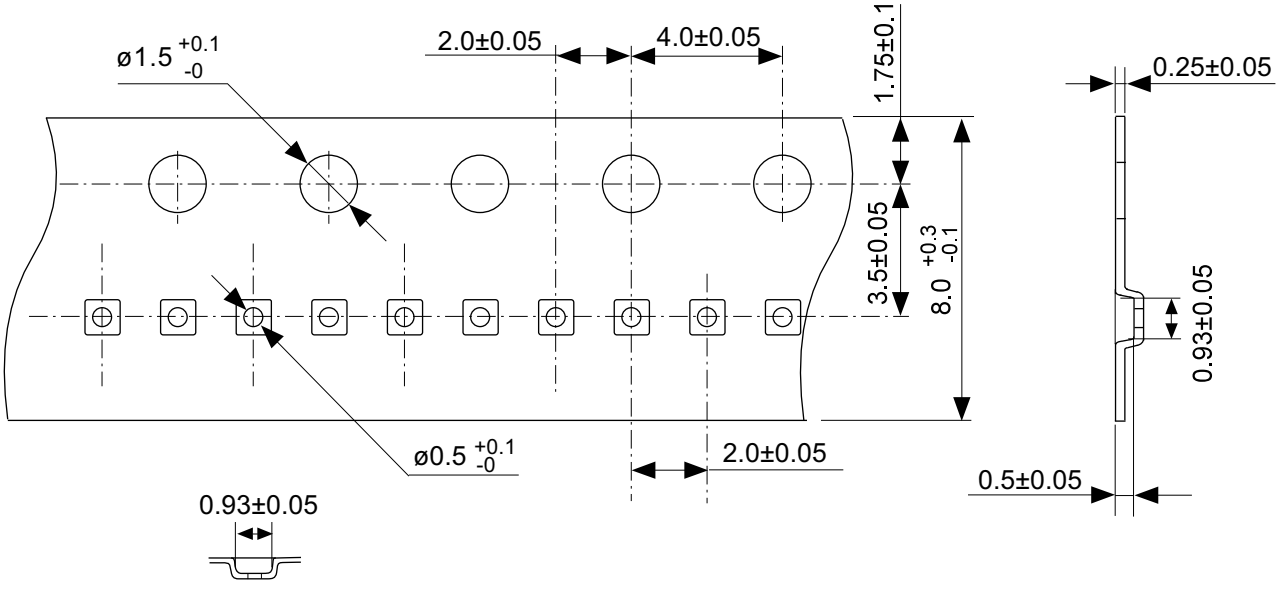

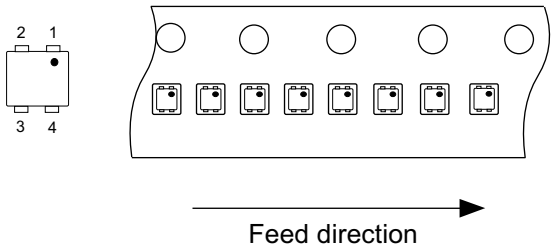

No. PK004-A-C-SD-3.0

TITLE	HSNT-4-A-Carrier Tape
No.	PK004-A-C-SD-3.0
ANGLE	
UNIT	mm
ABLIC Inc.	

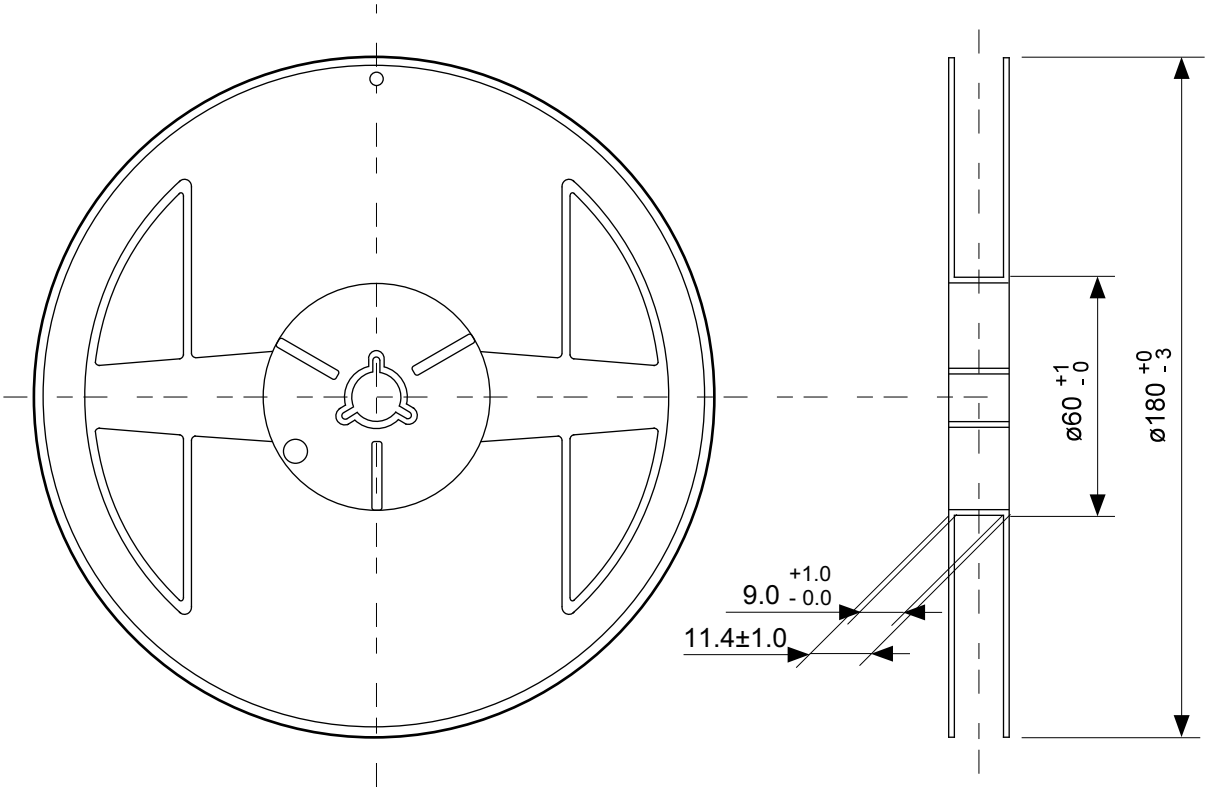

Enlarged drawing in the central part

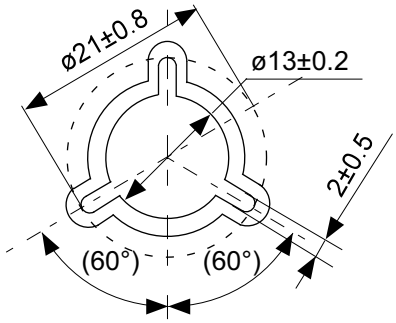

No. PK004-A-R-SD-3.0

TITLE	HSNT-4-A-Reel		
No.	PK004-A-R-SD-3.0		
ANGLE		QTY.	10,000
UNIT	mm		
ABLIC Inc.			

Land Pattern

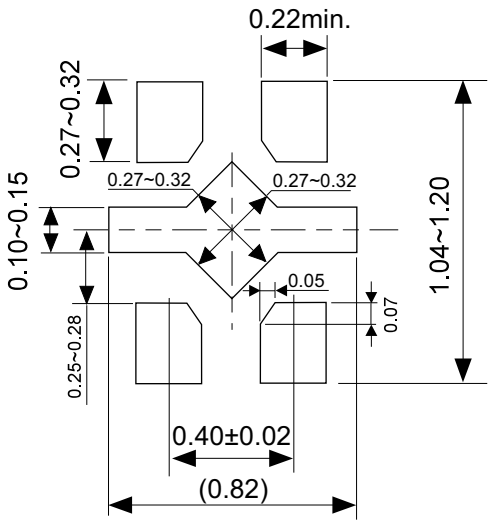

Caution It is recommended to solder the heat sink to a board in order to ensure the heat radiation.

注意 放熱性を確保する為に、PKGの裏面放熱板（ヒートシンク）を基板に半田付けする事を推奨いたします。

Metal Mask Pattern

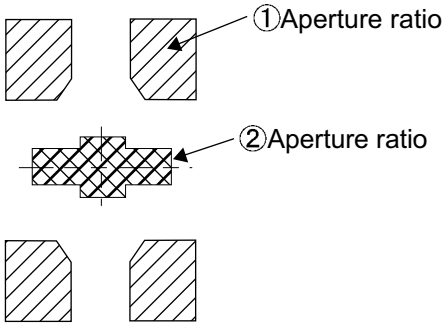

Caution ① Mask aperture ratio of the lead mounting part is 100%.
② Mask aperture ratio of the heat sink mounting part is 40%.
③ Mask thickness: t0.10mm to 0.12 mm

注意 ①リード実装部のマスク開口率は100%です。
②放熱板実装のマスク開口率は40%です。
③マスク厚み：t0.10mm ~ 0.12 mm

No. PK004-A-L-SD-3.0

TITLE	HSNT-4-A -Land Recommendation
No.	PK004-A-L-SD-3.0
ANGLE	
UNIT	mm
ABLIC Inc.	

Disclaimers (Handling Precautions)

1. All the information described herein (product data, specifications, figures, tables, programs, algorithms and application circuit examples, etc.) is current as of publishing date of this document and is subject to change without notice.
2. The circuit examples and the usages described herein are for reference only, and do not guarantee the success of any specific mass-production design.
   ABLIC Inc. is not liable for any losses, damages, claims or demands caused by the reasons other than the products described herein (hereinafter "the products") or infringement of third-party intellectual property right and any other right due to the use of the information described herein.
3. ABLIC Inc. is not liable for any losses, damages, claims or demands caused by the incorrect information described herein.
4. Be careful to use the products within their ranges described herein. Pay special attention for use to the absolute maximum ratings, operation voltage range and electrical characteristics, etc.
   ABLIC Inc. is not liable for any losses, damages, claims or demands caused by failures and / or accidents, etc. due to the use of the products outside their specified ranges.
5. Before using the products, confirm their applications, and the laws and regulations of the region or country where they are used and verify suitability, safety and other factors for the intended use.
6. When exporting the products, comply with the Foreign Exchange and Foreign Trade Act and all other export-related laws, and follow the required procedures.
7. The products are strictly prohibited from using, providing or exporting for the purposes of the development of weapons of mass destruction or military use. ABLIC Inc. is not liable for any losses, damages, claims or demands caused by any provision or export to the person or entity who intends to develop, manufacture, use or store nuclear, biological or chemical weapons or missiles, or use any other military purposes.
8. The products are not designed to be used as part of any device or equipment that may affect the human body, human life, or assets (such as medical equipment, disaster prevention systems, security systems, combustion control systems, infrastructure control systems, vehicle equipment, traffic systems, in-vehicle equipment, aviation equipment, aerospace equipment, and nuclear-related equipment), excluding when specified for in-vehicle use or other uses by ABLIC, Inc. Do not apply the products to the above listed devices and equipments.
   ABLIC Inc. is not liable for any losses, damages, claims or demands caused by unauthorized or unspecified use of the products.
9. In general, semiconductor products may fail or malfunction with some probability. The user of the products should therefore take responsibility to give thorough consideration to safety design including redundancy, fire spread prevention measures, and malfunction prevention to prevent accidents causing injury or death, fires and social damage, etc. that may ensue from the products' failure or malfunction.
   The entire system in which the products are used must be sufficiently evaluated and judged whether the products are allowed to apply for the system on customer's own responsibility.
10. The products are not designed to be radiation-proof. The necessary radiation measures should be taken in the product design by the customer depending on the intended use.
11. The products do not affect human health under normal use. However, they contain chemical substances and heavy metals and should therefore not be put in the mouth. The fracture surfaces of wafers and chips may be sharp. Be careful when handling these with the bare hands to prevent injuries, etc.
12. When disposing of the products, comply with the laws and ordinances of the country or region where they are used.
13. The information described herein contains copyright information and know-how of ABLIC Inc. The information described herein does not convey any license under any intellectual property rights or any other rights belonging to ABLIC Inc. or a third party. Reproduction or copying of the information from this document or any part of this document described herein for the purpose of disclosing it to a third-party is strictly prohibited without the express permission of ABLIC Inc.
14. For more details on the information described herein or any other questions, please contact ABLIC Inc.'s sales representative.
15. This Disclaimers have been delivered in a text using the Japanese language, which text, despite any translations into the English language and the Chinese language, shall be controlling.

2.4-2019.07

ENTEGRECİ

Bu belge www.entegreci.com üzerinden sunulmaktadır.

Elektronik komponent tedarikinde Entegreci

Entegreci, Eskişehir merkezli, Türkiye geneline satış yapan bir elektronik komponent mağazasıdır. Entegreler (IC), mikrodenetleyiciler, transistörler, diyotlar, pasif elemanlar, konnektörler, modüller ve geliştirme kartları tek adetten seri üretim adetlerine kadar satılır. Ürün sayfalarında güncel stok durumunu, fiyatı ve datasheet bağlantısını bulabilirsiniz.

Parça koduyla arama

Üretici parça numarasını yazın; stok ve fiyatı hemen görün.

www.entegreci.com

Ürün kategorileri

Entegreden kapasitöre tüm elektronik komponent kategorileri.

Kategorilere göz atın

Üreticiler

Aradığınız üreticinin ürünlerini tek sayfada inceleyin.

Üreticileri görün

Toplu alım ve teklif

Listede olmayan ya da yüksek adetli parçalar için teklif isteyin.

Teklif isteyin

www.entegreci.com | **destek@entegreci.com** | **0850 305 90 34**

Entegreci is an online electronic components store based in Türkiye. Search by manufacturer part number to see stock, prices and datasheets for integrated circuits, microcontrollers, transistors, passive components and connectors, or request a quote for parts that are not listed.

Bu sayfa Entegreci tarafından eklenmiştir. Belgenin önceki sayfaları asıl yayıncısına aittir ve içeriği değiştirilmemiştir; en güncel sürüm için belgenin yayıncısına başvurun.