www.ablic.com

5.5 V INPUT, 1000 mA VOLTAGE REGULATOR

© ABLIC Inc., 2011-2023

Rev.3.0_00

The S-13A1 Series is a positive voltage regulator with a low dropout voltage, high-accuracy output voltage, and low current consumption developed based on CMOS technology.
A 2.2 μF small ceramic capacitor can be used, and the very small dropout voltage and the large output current due to the built-in transistor with low on-resistance are provided. The S-13A1 Series includes a load current protection circuit that prevents the output current from exceeding the current capacity of the output transistor and a thermal shutdown circuit that prevents damage due to overheating. In addition to the types in which output voltage is set inside the IC, a type for which output voltage can be set via an external resistor is added to a lineup. Also, the S-13A1 Series includes an inrush current limit circuit to limit the excess inrush current generated at power-on or at the time when the ON / OFF pin is set to ON. High heat radiation HSOP-8A and HSOP-6 or small SOT-89-5 packages realize high-density mounting.

■ Features

- Output voltage (internally set): 1.0 V to 3.5 V, selectable in 0.05 V step
- Output voltage (externally set): 1.05 V to 5.0 V, settable via external resistor
- Input voltage: 1.5 V to 5.5 V
- Output voltage accuracy: ±1.0% (internally set, 1.0 V to 1.45 V output product: ±15 mV)
- Dropout voltage: 70 mV typ. (3.0 V output product, I_{OUT} = 300 mA)
- Current consumption: During operation: 60 μA typ., 90 μA max.
  During power-off: 0.1 μA typ., 1.0 μA max.
- Output current: Possible to output 1000 mA ($V_{IN} \geq V_{OUT(S)}$ + 1.0 V)*1
- Input and output capacitors: A ceramic capacitor of 2.2 μF or more can be used.
- Ripple rejection: 70 dB typ. (f = 1.0 kHz)
- Built-in overcurrent protection circuit: Limits overcurrent of output transistor.
- Built-in thermal shutdown circuit: Prevents damage caused by heat.
- Built-in inrush current limit circuit: Limits excessive inrush current generated at power-on or at the time when the ON / OFF pin is set to ON.
  For types in which output voltage is internally set, the inrush current limit time can be changed via an external capacitor (C_{SS}).
  Inrush current limit time 0.7 ms typ.
  (Types in which output voltage is internally set, C_{SS} = 1.0 nF)
  Inrush current limit time 0.4 ms typ.
  (Types in which output voltage is internally set, SSC pin = open)
  Inrush current limit time 0.4 ms typ.
  (Types in which output voltage is externally set)
- Built-in ON / OFF circuit: Ensures long battery life.
  Discharge shunt function "available" / "unavailable" is selectable.
  Pull-down function "available" / "unavailable" is selectable.
- Operation temperature range: Ta = −40°C to +85°C
- Lead-free (Sn 100%), halogen-free

***1.** Please make sure that the loss of the IC will not exceed the power dissipation when the output current is large.

■ Applications

- Constant-voltage power supply for battery-powered device
- Constant-voltage power supply for TV, notebook PC and home electric appliance
- Constant-voltage power supply for portable equipment

■ Packages

- HSOP-8A
- HSOP-6
- SOT-89-5

■ Block Diagrams

1. Types in which output voltage is internally set

1. 1 S-13A1 Series A type (S-13A1Axx)

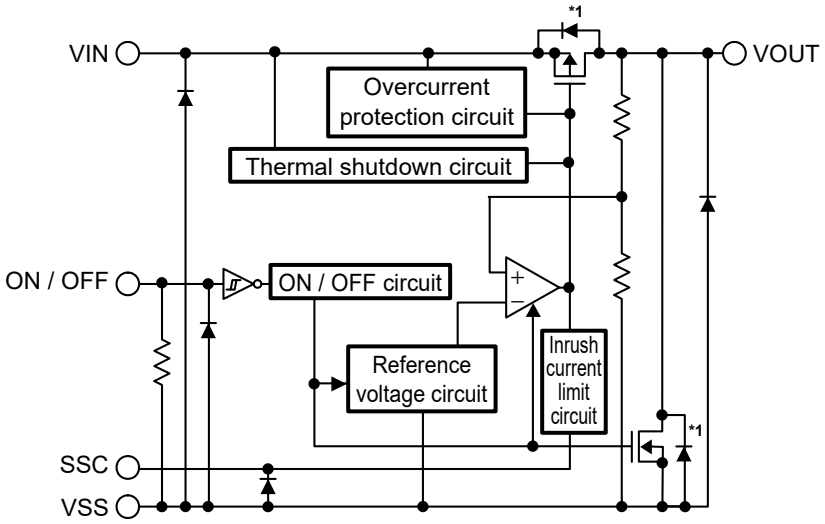

Function	Status
ON / OFF logic	Active "H"
Discharge shunt function	Available
Pull-down resistor	Available

***1.** Parasitic diode

Figure 1

1. 2 S-13A1 Series B type (S-13A1Bxx)

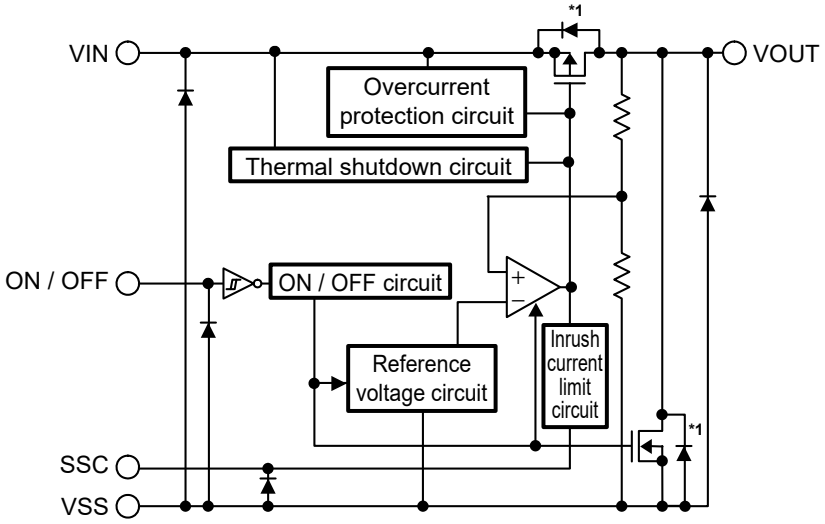

Function	Status
ON / OFF logic	Active "H"
Discharge shunt function	Available
Pull-down resistor	Unavailable

***1.** Parasitic diode

Figure 2

1. 3 S-13A1 Series C type (S-13A1Cxx)

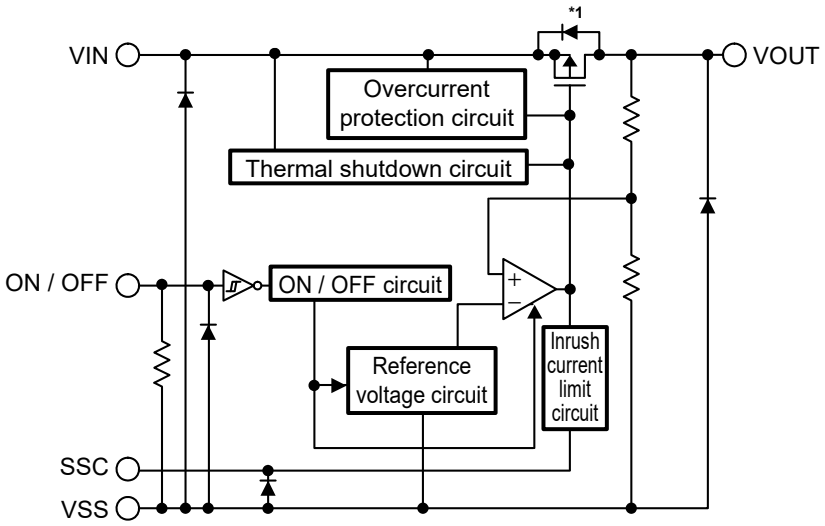

Function	Status
ON / OFF logic	Active "H"
Discharge shunt function	Unavailable
Pull-down resistor	Available

***1.** Parasitic diode

Figure 3

1. 4 S-13A1 Series D type (S-13A1Dxx)

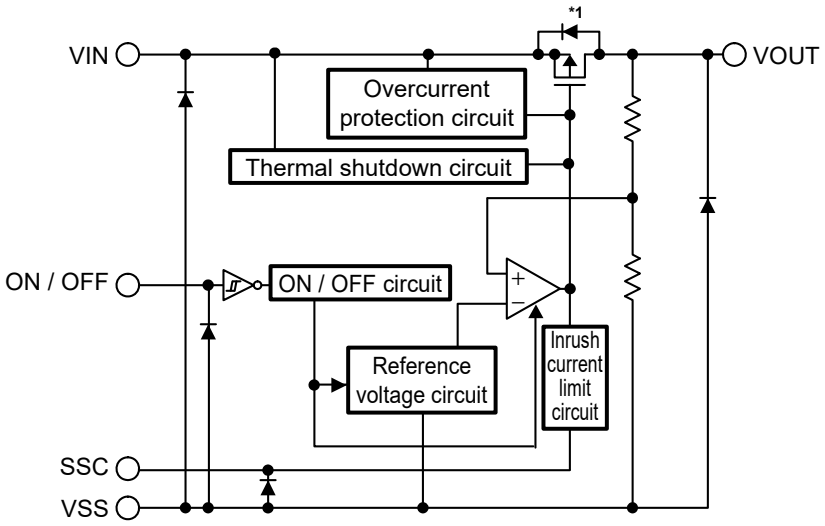

Function	Status
ON / OFF logic	Active "H"
Discharge shunt function	Unavailable
Pull-down resistor	Unavailable

***1.** Parasitic diode

Figure 4

2. Types in which output voltage is externally set

2. 1 S-13A1 Series A type (S-13A1A00)

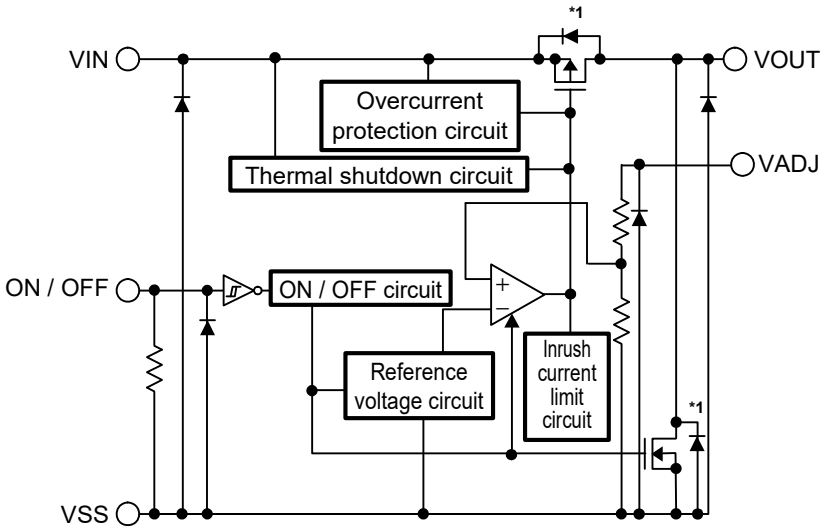

Function	Status
ON / OFF logic	Active "H"
Discharge shunt function	Available
Pull-down resistor	Available

***1.** Parasitic diode

Figure 5

2. 2 S-13A1 Series B type (S-13A1B00)

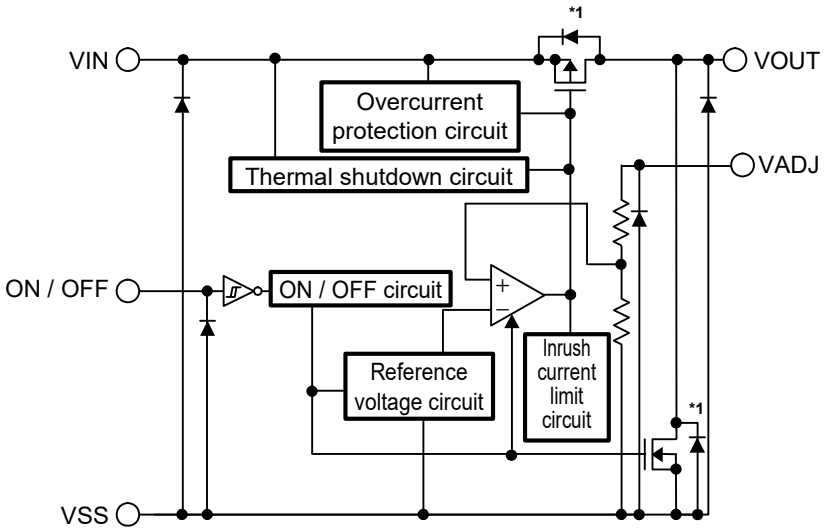

Function	Status
ON / OFF logic	Active "H"
Discharge shunt function	Available
Pull-down resistor	Unavailable

***1.** Parasitic diode

Figure 6

2. 3 S-13A1 Series C type (S-13A1C00)

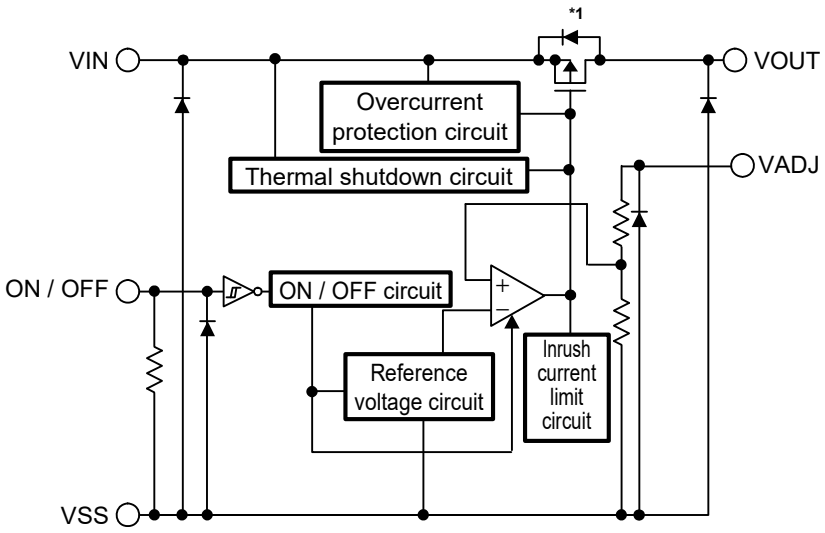

Function	Status
ON / OFF logic	Active "H"
Discharge shunt function	Unavailable
Pull-down resistor	Available

***1.** Parasitic diode

Figure 7

2. 4 S-13A1 Series D type (S-13A1D00)

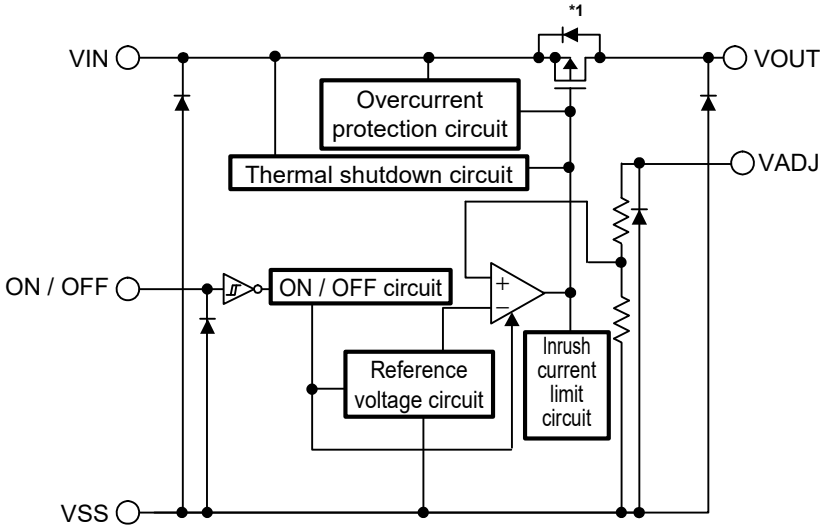

Function	Status
ON / OFF logic	Active "H"
Discharge shunt function	Unavailable
Pull-down resistor	Unavailable

***1.** Parasitic diode

Figure 8

■ Product Name Structure

Users can select the product type, output voltage, and package type for the S-13A1 Series. Refer to "**1. Product name**" regarding the contents of product name, "**2. Function list of product type**" regarding the product type, "**3. Packages**" regarding the package drawings, "**4. Product name list**" regarding details of the product name.

1. Product name

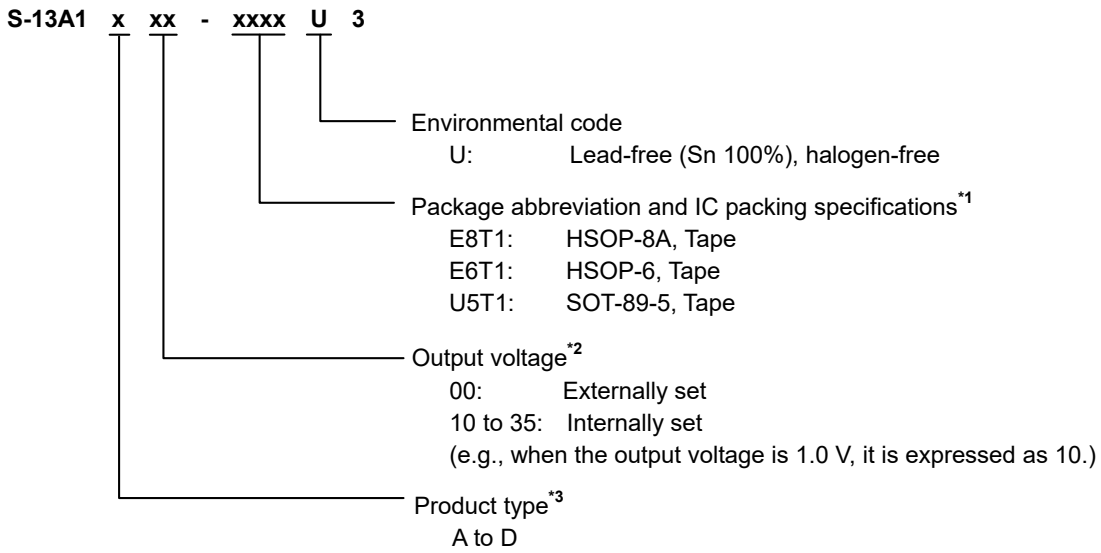

***1.** Refer to the tape drawing.
***2.** If you request the product which has 0.05 V step, contact our sales representatives.
***3.** Refer to "**2. Function list of product type**".

2. Function list of product type

Table 1

Product Type	ON / OFF Logic	Discharge Shunt Function	Pull-down Resistor	Output Voltage	Inrush Current Limit Time
A	Active "H"	Available	Available	Internally set	Adjustable via an external capacitor (C_{SS})
				Externally set	Fixed to 0.4 ms typ.*1
B	Active "H"	Available	Unavailable	Internally set	Adjustable via an external capacitor (C_{SS})
				Externally set	Fixed to 0.4 ms typ.*1
C	Active "H"	Unavailable	Available	Internally set	Adjustable via an external capacitor (C_{SS})
				Externally set	Fixed to 0.4 ms typ.*1
D	Active "H"	Unavailable	Unavailable	Internally set	Adjustable via an external capacitor (C_{SS})
				Externally set	Fixed to 0.4 ms typ.*1

***1.** Inrush current limit time is fixed to 0.4 ms typ. that can not be changed.

3. Packages

Table 2 Package Drawing Codes

Package Name	Dimension	Tape	Reel	Land
HSOP-8A	FH008-Z-P-SD FH008-Z-P-S1	FH008-Z-C-SD FH008-Z-C-S1	FH008-Z-R-SD	FH008-Z-L-SD
HSOP-6	FH006-A-P-SD	FH006-A-C-SD	FH006-A-R-S1	FH006-A-L-SD
SOT-89-5	UP005-A-P-SD	UP005-A-C-SD	UP005-A-R-SD	–

4. Product name list

4. 1 S-13A1 Series A type

ON / OFF logic: Active "H"
Discharge shunt function: Available Pull-down resistor: Available

Table 3

Output Voltage	HSOP-8A	HSOP-6	SOT-89-5
Externally set	S-13A1A00-E8T1U3	S-13A1A00-E6T1U3	S-13A1A00-U5T1U3
1.2 V ± 15 mV	S-13A1A12-E8T1U3	S-13A1A12-E6T1U3	S-13A1A12-U5T1U3
1.8 V ± 1.0%	S-13A1A18-E8T1U3	S-13A1A18-E6T1U3	S-13A1A18-U5T1U3
2.5 V ± 1.0%	S-13A1A25-E8T1U3	S-13A1A25-E6T1U3	S-13A1A25-U5T1U3
3.3 V ± 1.0%	S-13A1A33-E8T1U3	S-13A1A33-E6T1U3	S-13A1A33-U5T1U3

Remark Please contact our sales representatives for products other than the above.

4. 2 S-13A1 Series B type

ON / OFF logic: Active "H"
Discharge shunt function: Available Pull-down resistor: Unavailable

Table 4

Output Voltage	HSOP-8A	HSOP-6	SOT-89-5
Externally set	S-13A1B00-E8T1U3	S-13A1B00-E6T1U3	S-13A1B00-U5T1U3
1.2 V ± 15 mV	S-13A1B12-E8T1U3	S-13A1B12-E6T1U3	S-13A1B12-U5T1U3
1.8 V ± 1.0%	S-13A1B18-E8T1U3	S-13A1B18-E6T1U3	S-13A1B18-U5T1U3
2.5 V ± 1.0%	S-13A1B25-E8T1U3	S-13A1B25-E6T1U3	S-13A1B25-U5T1U3
3.3 V ± 1.0%	S-13A1B33-E8T1U3	S-13A1B33-E6T1U3	S-13A1B33-U5T1U3

Remark Please contact our sales representatives for products other than the above.

4. 3 S-13A1 Series C type

ON / OFF logic: Active "H"
Discharge shunt function: Unavailable Pull-down resistor: Available

Table 5

Output Voltage	HSOP-8A	HSOP-6	SOT-89-5
Externally set	S-13A1C00-E8T1U3	S-13A1C00-E6T1U3	S-13A1C00-U5T1U3
1.2 V ± 15 mV	S-13A1C12-E8T1U3	S-13A1C12-E6T1U3	S-13A1C12-U5T1U3
1.8 V ± 1.0%	S-13A1C18-E8T1U3	S-13A1C18-E6T1U3	S-13A1C18-U5T1U3
2.5 V ± 1.0%	S-13A1C25-E8T1U3	S-13A1C25-E6T1U3	S-13A1C25-U5T1U3
3.3 V ± 1.0%	S-13A1C33-E8T1U3	S-13A1C33-E6T1U3	S-13A1C33-U5T1U3

Remark Please contact our sales representatives for products other than the above.

4. 4 S-13A1 Series D type

ON / OFF logic: Active "H"
Discharge shunt function: Unavailable Pull-down resistor: Unavailable

Table 6

Output Voltage	HSOP-8A	HSOP-6	SOT-89-5
Externally set	S-13A1D00-E8T1U3	S-13A1D00-E6T1U3	S-13A1D00-U5T1U3
1.2 V ± 15 mV	S-13A1D12-E8T1U3	S-13A1D12-E6T1U3	S-13A1D12-U5T1U3
1.8 V ± 1.0%	S-13A1D18-E8T1U3	S-13A1D18-E6T1U3	S-13A1D18-U5T1U3
2.5 V ± 1.0%	S-13A1D25-E8T1U3	S-13A1D25-E6T1U3	S-13A1D25-U5T1U3
3.3 V ± 1.0%	S-13A1D33-E8T1U3	S-13A1D33-E6T1U3	S-13A1D33-U5T1U3

Remark Please contact our sales representatives for products other than the above.

■ Pin Configurations

1. HSOP-8A

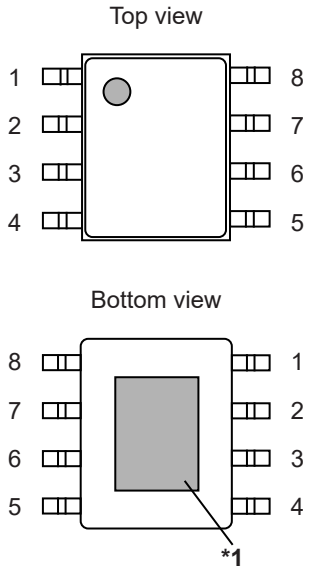

Figure 9

Table 7 Types in Which Output Voltage is Internally Set

Pin No.	Symbol	Description
1	VOUT	Output voltage pin
2	ON / OFF	ON / OFF pin
3	NC*2	No connection
4	VSS	GND pin
5	SSC*3	Inrush current limit pin
6	NC*2	No connection
7	NC*2	No connection
8	VIN	Input voltage pin

.

Table 8 Types in Which Output Voltage is Externally Set

Pin No.	Symbol	Description
1	VOUT	Output voltage pin
2	VADJ	Output voltage adjustment pin
3	NC*2	No connection
4	VSS	GND pin
5	ON / OFF	ON / OFF pin
6	NC*2	No connection
7	NC*2	No connection
8	VIN	Input voltage pin

***1.** Connect the heat sink of backside at shadowed area to the board, and set electric potential GND.
However, do not use it as the function of electrode.

***2.** The NC pin is electrically open. The NC pin can be connected to the VIN pin or the VSS pin.

***3.** Connect a capacitor between the SSC pin and the VSS pin.
The inrush current limit time of the VOUT pin at power-on or at the time when the ON / OFF pin is set to ON can be adjusted according to the capacitance.
Moreover, the SSC pin is available even when it is open.
For details, refer to "**■ Selection of Capacitor for Inrush Current Limit (C_{SS}) (Types in Which Output Voltage is Internally Set)**".

2. HSOP-6

Top view

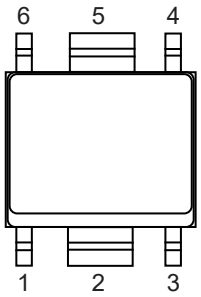

Figure 10

Table 9 Types in Which Output Voltage is Internally Set

Pin No.	Symbol	Description
1	VOUT	Output voltage pin
2	VSS	GND pin
3	ON / OFF	ON / OFF pin
4	SSC*1	Inrush current limit pin
5	VSS	GND pin
6	VIN	Input voltage pin

Table 10 Types in Which Output Voltage is Externally Set

Pin No.	Symbol	Description
1	VOUT	Output voltage pin
2	VSS	GND pin
3	VADJ	Output voltage adjustment pin
4	ON / OFF	ON / OFF pin
5	VSS	GND pin
6	VIN	Input voltage pin

***1.** Connect a capacitor between the SSC pin and the VSS pin.
The inrush current limit time of the VOUT pin at power-on or at the time when the ON / OFF pin is set to ON can be adjusted according to the capacitance.
Moreover, the SSC pin is available even when it is open.
For details, refer to "**■ Selection of Capacitor for Inrush Current Limit (C_{SS}) (Types in Which Output Voltage is Internally Set)**".

3. SOT-89-5

Top view

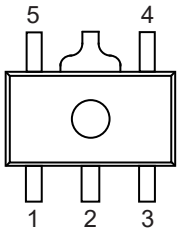

Figure 11

Table 11 Types in Which Output Voltage is Internally Set

Pin No.	Symbol	Description
1	ON / OFF	ON / OFF pin
2	VSS	GND pin
3	SSC*1	Inrush current limit pin
4	VIN	Input voltage pin
5	VOUT	Output voltage pin

Table 12 Types in Which Output Voltage is Externally Set

Pin No.	Symbol	Description
1	VADJ	Output voltage adjustment pin
2	VSS	GND pin
3	ON / OFF	ON / OFF pin
4	VIN	Input voltage pin
5	VOUT	Output voltage pin

***1.** Connect a capacitor between the SSC pin and the VSS pin.
The inrush current limit time of the VOUT pin at power-on or at the time when the ON / OFF pin is set to ON can be adjusted according to the capacitance.
Moreover, the SSC pin is available even when it is open.
For details, refer to "**■ Selection of Capacitor for Inrush Current Limit (C_{SS}) (Types in Which Output Voltage is Internally Set)**".

■ Absolute Maximum Ratings

Table 13

(Ta = +25°C unless otherwise specified)

Item	Symbol	Absolute Maximum Rating	Unit
Input voltage	V_{IN}	V_{SS} – 0.3 to V_{SS} + 6.0	V
	$V_{ON / OFF}$	V_{SS} – 0.3 to V_{SS} + 6.0	V
	V_{SSC}	V_{SS} – 0.3 to V_{IN} + 0.3	V
	V_{VADJ}	V_{SS} – 0.3 to V_{SS} + 6.0	V
Output voltage	V_{OUT}	V_{SS} – 0.3 to V_{IN} + 0.3	V
Output current	I_{OUT}	1000	mA
Operation ambient temperature	T_{opr}	−40 to +85	°C
Storage temperature	T_{stg}	−40 to +125	°C

Caution The absolute maximum ratings are rated values exceeding which the product could suffer physical damage. These values must therefore not be exceeded under any conditions.

■ Thermal Resistance Value

Table 14

Item	Symbol	Condition		Min.	Typ.	Max.	Unit
Junction-to-ambient thermal resistance*1	θ_{JA}	HSOP-8A	Board A	–	104	–	°C/W
			Board B	–	74	–	°C/W
			Board C	–	39	–	°C/W
			Board D	–	37	–	°C/W
			Board E	–	31	–	°C/W
		HSOP-6	Board A	–	96	–	°C/W
			Board B	–	74	–	°C/W
			Board C	–	–	–	°C/W
			Board D	–	44	–	°C/W
			Board E	–	41	–	°C/W
		SOT-89-5	Board A	–	119	–	°C/W
			Board B	–	84	–	°C/W
			Board C	–	–	–	°C/W
			Board D	–	46	–	°C/W
			Board E	–	35	–	°C/W

***1.** Test environment: compliance with JEDEC STANDARD JESD51-2A

Remark Refer to "■ **Power Dissipation**" and "**Test Board**" for details.

■ Electrical Characteristics

1. Types in which output voltage is internally set (S-13A1x10 to S-13A1x35)

Table 15 (1 / 2)

(Ta = +25°C unless otherwise specified)

Item	Symbol	Condition		Min.	Typ.	Max.	Unit	Test Circuit
Output voltage*1	$V_{OUT(E)}$	V_{IN} = $V_{OUT(S)}$ + 1.0 V, I_{OUT} = 100 mA	1.0 V ≤ $V_{OUT(S)}$ < 1.5 V	$V_{OUT(S)}$ − 0.015	$V_{OUT(S)}$	$V_{OUT(S)}$ + 0.015	V	1
			1.5 V ≤ $V_{OUT(S)}$ ≤ 3.5 V	$V_{OUT(S)}$ × 0.99	$V_{OUT(S)}$	$V_{OUT(S)}$ × 1.01	V	1
Output current*2	I_{OUT}	V_{IN} ≥ $V_{OUT(S)}$ + 1.0 V		1000*5	–	–	mA	3
Dropout voltage*3	V_{drop}	I_{OUT} = 300 mA	1.0 V ≤ $V_{OUT(S)}$ < 1.1 V	0.50	0.54	0.58	V	1
			1.1 V ≤ $V_{OUT(S)}$ < 1.2 V	–	0.44	0.48	V	1
			1.2 V ≤ $V_{OUT(S)}$ < 1.3 V	–	0.34	0.38	V	1
			1.3 V ≤ $V_{OUT(S)}$ < 1.4 V	–	0.24	0.28	V	1
			1.4 V ≤ $V_{OUT(S)}$ < 1.5 V	–	0.14	0.18	V	1
			1.5 V ≤ $V_{OUT(S)}$ < 2.6 V	–	0.10	0.15	V	1
			2.6 V ≤ $V_{OUT(S)}$ ≤ 3.5 V	–	0.07	0.10	V	1
		I_{OUT} = 1000 mA	1.0 V ≤ $V_{OUT(S)}$ < 1.1 V	–	0.90	–	V	1
			1.1 V ≤ $V_{OUT(S)}$ < 1.2 V	–	0.80	–	V	1
			1.2 V ≤ $V_{OUT(S)}$ < 1.3 V	–	0.70	–	V	1
			1.3 V ≤ $V_{OUT(S)}$ < 1.4 V	–	0.60	–	V	1
			1.4 V ≤ $V_{OUT(S)}$ < 1.5 V	–	0.50	–	V	1
			1.5 V ≤ $V_{OUT(S)}$ < 2.0 V	–	0.40	–	V	1
			2.0 V ≤ $V_{OUT(S)}$ < 2.6 V	–	0.32	–	V	1
			2.6 V ≤ $V_{OUT(S)}$ ≤ 3.5 V	–	0.23	–	V	1
Line regulation	$\frac{\Delta V_{OUT1}}{\Delta V_{IN} \bullet V_{OUT}}$	$V_{OUT(S)}$ + 0.5 V ≤ V_{IN} ≤ 5.5 V, I_{OUT} = 100 mA		–	0.05	0.2	%/V	1
Load regulation	ΔV_{OUT2}	V_{IN} = $V_{OUT(S)}$ + 1.0 V, 1 mA ≤ I_{OUT} ≤ 300 mA		–20	–3	20	mV	1
Output voltage temperature coefficient*4	$\frac{\Delta V_{OUT}}{\Delta Ta \bullet V_{OUT}}$	V_{IN} = $V_{OUT(S)}$ + 1.0 V, I_{OUT} = 100 mA, −40°C ≤ Ta ≤ +85°C		–	±100	–	ppm/°C	1
Current consumption during operation	I_{SS1}	V_{IN} = $V_{OUT(S)}$ + 1.0 V, ON / OFF pin = ON, no load		–	60	90	µA	2
Current consumption during power-off	I_{SS2}	V_{IN} = $V_{OUT(S)}$ + 1.0 V, ON / OFF pin = OFF, no load		–	0.1	1.0	µA	2
Input voltage	V_{IN}	–		1.5	–	5.5	V	–
ON / OFF pin input voltage "H"	V_{SH}	V_{IN} = $V_{OUT(S)}$ + 1.0 V, R_L = 1.0 kΩ determined by V_{OUT} output level		1.0	–	–	V	4
ON / OFF pin input voltage "L"	V_{SL}	V_{IN} = $V_{OUT(S)}$ + 1.0 V, R_L = 1.0 kΩ determined by V_{OUT} output level		–	–	0.3	V	4
ON / OFF pin input current "H"	I_{SH}	V_{IN} = 5.5 V, $V_{ON / OFF}$ = 5.5 V	B / D type (without pull-down resistor)	–0.1	–	0.1	µA	4
			A / C type (with pull-down resistor)	1.0	2.5	5.0	µA	4
ON / OFF pin input current "L"	I_{SL}	V_{IN} = 5.5 V, $V_{ON / OFF}$ = 0 V		–0.1	–	0.1	µA	4
Ripple rejection	| RR |	V_{IN} = $V_{OUT(S)}$ + 1.0 V, f = 1.0 kHz, ΔV_{rip} = 0.5 Vrms, I_{OUT} = 100 mA	1.0 V ≤ $V_{OUT(S)}$ < 1.2 V	–	70	–	dB	5
			1.2 V ≤ $V_{OUT(S)}$ < 3.0 V	–	65	–	dB	5
			3.0 V ≤ $V_{OUT(S)}$ ≤ 3.5 V	–	60	–	dB	5
Short-circuit current	I_{short}	V_{IN} = $V_{OUT(S)}$ + 1.0 V, ON / OFF pin = ON, V_{OUT} = 0 V		–	200	–	mA	3
Thermal shutdown detection temperature	T_{SD}	Junction temperature		–	150	–	°C	–
Thermal shutdown release temperature	T_{SR}	Junction temperature		–	120	–	°C	–

Table 15 (2 / 2)

(Ta = +25°C unless otherwise specified)

Item	Symbol	Condition		Min.	Typ.	Max.	Unit	Test Circuit
Inrush current limit time	t_{RUSH}	V_{IN} = $V_{OUT(S)}$ + 1.0 V, ON / OFF pin = ON, I_{OUT} = 1000 mA, C_{SS} = 1.0 nF		–	0.7	–	ms	6
		V_{IN} = $V_{OUT(S)}$ + 1.0 V, ON / OFF pin = ON, I_{OUT} = 1000 mA, C_{SS} = 0 nF		–	0.4	–	ms	6
Discharge shunt resistance during power-off	R_{LOW}	V_{IN} = 5.5 V, V_{OUT} = 0.1 V	A / B type (with discharge shunt function)	–	35	–	Ω	3
Power-off pull-down resistance	R_{PD}	–	A / C type (with pull-down resistor)	1.1	2.2	5.5	MΩ	4

***1.** $V_{OUT(S)}$: Set output voltage
$V_{OUT(E)}$: Actual output voltage
Output voltage when fixing I_{OUT} (= 100 mA) and inputting $V_{OUT(S)}$ + 1.0 V

***2.** The output current at which the output voltage becomes 95% of $V_{OUT(E)}$ after gradually increasing the output current.

***3.** $V_{drop} = V_{IN1} - (V_{OUT3} \times 0.98)$
V_{OUT3} is the output voltage when V_{IN} = $V_{OUT(S)}$ + 1.0 V and I_{OUT} = 300 mA, 1000 mA.
V_{IN1} is the input voltage at which the output voltage becomes 98% of V_{OUT3} after gradually decreasing the input voltage.

***4.** The change in temperature [mV/°C] is calculated using the following equation.

$$\frac{\Delta V_{OUT}}{\Delta Ta}\ [\text{mV/°C}]^{*1} = V_{OUT(S)}\ [\text{V}]^{*2} \times \frac{\Delta V_{OUT}}{\Delta Ta \bullet V_{OUT}}\ [\text{ppm/°C}]^{*3} \div 1000$$

***1.** Change in temperature of the output voltage
***2.** Set output voltage
***3.** Output voltage temperature coefficient

***5.** The output current can be at least this value.
Due to limitation of the package power dissipation, this value may not be satisfied. Attention should be paid to the power dissipation when the output current is large.
This specification is guaranteed by design.

2. Types in which output voltage is externally set (S-13A1x00)

Table 16

(Ta = +25°C unless otherwise specified)

Item	Symbol	Condition	Min.	Typ.	Max.	Unit	Test Circuit
Output voltage of adjust pin*1	V_{VADJ}	$V_{VADJ} = V_{OUT}$, $V_{IN} = V_{OUT(S)} + 1.0$ V, I_{OUT} = 100 mA	0.985	1.0	1.015	V	7
Output voltage range	V_{ROUT}	–	1.05	–	5.00	V	13
Internal resistance value of adjust pin	R_{VADJ}	–	–	400	–	kΩ	–
Output current*2	I_{OUT}	$V_{IN} \geq V_{OUT(S)} + 1.0$ V	1000*5	–	–	mA	9
Dropout voltage*3	V_{drop}	$V_{VADJ} = V_{OUT}$, I_{OUT} = 300 mA, $V_{OUT(S)}$ = 1.0 V	0.50	0.54	0.58	V	7
		$V_{VADJ} = V_{OUT}$, I_{OUT} = 1000 mA, $V_{OUT(S)}$ = 1.0 V	–	0.90	–	V	7
Line regulation	$\frac{\Delta V_{OUT1}}{\Delta V_{IN} \bullet V_{OUT}}$	$V_{VADJ} = V_{OUT}$, $V_{OUT(S)} + 0.5$ V ≤ V_{IN} ≤ 5.5 V, I_{OUT} = 100 mA	–	0.05	0.2	%/V	7
Load regulation	ΔV_{OUT2}	$V_{VADJ} = V_{OUT}$, $V_{IN} = V_{OUT(S)} + 1.0$ V, 1 mA ≤ I_{OUT} ≤ 300 mA	–20	–3	20	mV	7
Output voltage temperature coefficient*4	$\frac{\Delta V_{OUT}}{\Delta Ta \bullet V_{OUT}}$	$V_{IN} = V_{OUT(S)} + 1.0$ V, I_{OUT} = 100 mA, –40°C ≤ Ta ≤ +85°C	–	±100	–	ppm/°C	7
Current consumption during operation	I_{SS1}	$V_{VADJ} = V_{OUT}$, $V_{IN} = V_{OUT(S)} + 1.0$ V, ON / OFF pin = ON, no load	–	60	90	µA	8
Current consumption during power-off	I_{SS2}	$V_{VADJ} = V_{OUT}$, $V_{IN} = V_{OUT(S)} + 1.0$ V, ON / OFF pin = OFF, no load	–	0.1	1.0	µA	8
Input voltage	V_{IN}	–	1.5	–	5.5	V	–
ON / OFF pin input voltage "H"	V_{SH}	$V_{IN} = V_{OUT(S)} + 1.0$ V, R_L = 1.0 kΩ determined by V_{OUT} output level	1.0	–	–	V	10
ON / OFF pin input voltage "L"	V_{SL}	$V_{IN} = V_{OUT(S)} + 1.0$ V, R_L = 1.0 kΩ determined by V_{OUT} output level	–	–	0.3	V	10
ON / OFF pin input current "H"	I_{SH}	V_{IN} = 5.5 V, $V_{ON / OFF}$ = 5.5 V — B / D type (without pull-down resistor)	–0.1	–	0.1	µA	10
		V_{IN} = 5.5 V, $V_{ON / OFF}$ = 5.5 V — A / C type (with pull-down resistor)	1.0	2.5	5.0	µA	10
ON / OFF pin input current "L"	I_{SL}	V_{IN} = 5.5 V, $V_{ON / OFF}$ = 0 V	–0.1	–	0.1	µA	10
Ripple rejection	| RR |	$V_{VADJ} = V_{OUT}$, $V_{IN} = V_{OUT(S)} + 1.0$ V, f = 1.0 kHz, ΔV_{rip} = 0.5 Vrms, I_{OUT} = 100 mA, V_{OUT} = 1.0 V	–	70	–	dB	11
Short-circuit current	I_{short}	$V_{IN} = V_{OUT(S)} + 1.0$ V, ON / OFF pin = ON, V_{OUT} = 0 V	–	200	–	mA	9
Thermal shutdown detection temperature	T_{SD}	Junction temperature	–	150	–	°C	–
Thermal shutdown release temperature	T_{SR}	Junction temperature	–	120	–	°C	–
Inrush current limit time	t_{RUSH}	$V_{IN} = V_{OUT(S)} + 1.0$ V, ON / OFF pin = ON, I_{OUT} = 1000 mA	–	0.4	–	ms	12
Discharge shunt resistance during power-off	R_{LOW}	V_{IN} = 5.5 V, V_{OUT} = 0.1 V — A / B type (with discharge shunt function)	–	35	–	Ω	9
Power-off pull-down resistor	R_{PD}	– — A / C type (with pull-down resistor)	1.1	2.2	5.5	MΩ	10

***1.** $V_{OUT(S)}$: Set output voltage (= 1.0 V)

***2.** The output current at which the output voltage becomes 95% of V_{VADJ} after gradually increasing the output current.

***3.** $V_{drop} = V_{IN1} - (V_{OUT3} \times 0.98)$

V_{OUT3} is the output voltage when $V_{IN} = V_{OUT(S)} + 1.0$ V and $I_{OUT} = 300$ mA, 1000 mA.

V_{IN1} is the input voltage at which the output voltage becomes 98% of V_{OUT3} after gradually decreasing the input voltage.

***4.** The change in temperature [mV/°C] is calculated using the following equation.

$$\frac{\Delta V_{OUT}}{\Delta Ta}\ [\text{mV/°C}]^{*1} = V_{OUT(S)}\ [\text{V}]^{*2} \times \frac{\Delta V_{OUT}}{\Delta Ta \bullet V_{OUT}}\ [\text{ppm/°C}]^{*3} \div 1000$$

***1.** Change in temperature of the output voltage

***2.** Set output voltage

***3.** Output voltage temperature coefficient

***5.** The output current can be at least this value.

Due to limitation of the package power dissipation, this value may not be satisfied. Attention should be paid to the power dissipation when the output current is large.

This specification is guaranteed by design.

■ Test Circuits

1. Types in which output voltage is internally set (S-13A1x10 to S-13A1x35)

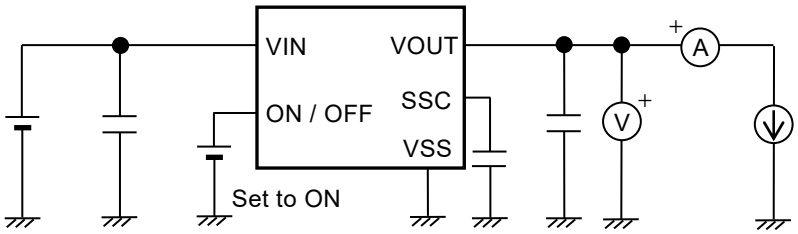

Figure 12 Test Circuit 1

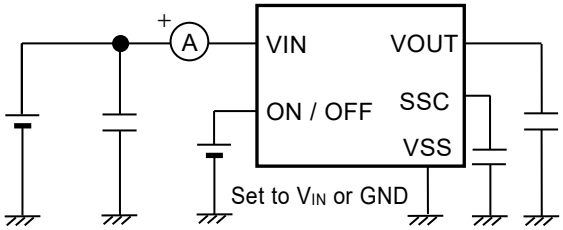

Figure 13 Test Circuit 2

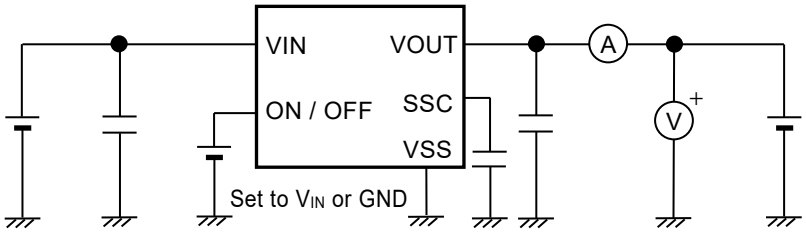

Figure 14 Test Circuit 3

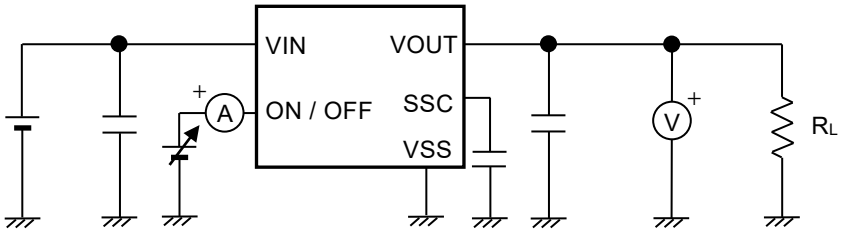

Figure 15 Test Circuit 4

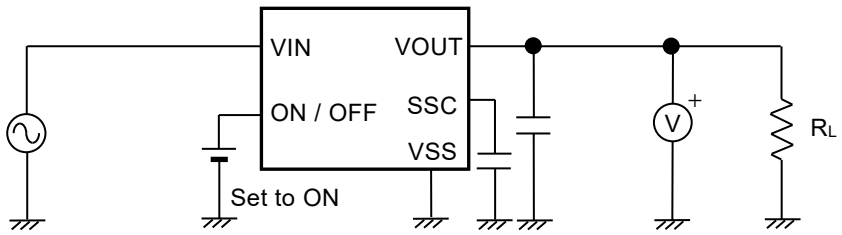

Figure 16 Test Circuit 5

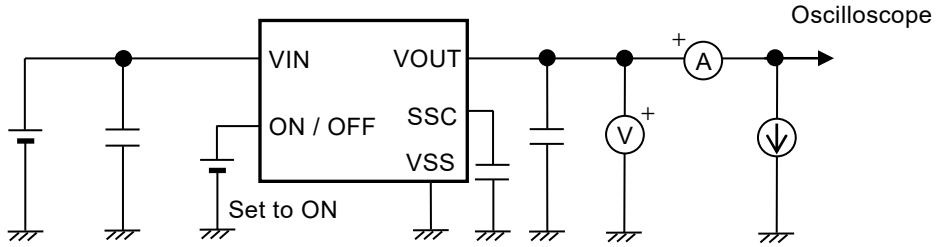

Figure 17 Test Circuit 6

2. Types in which output voltage is externally set (S-13A1x00)

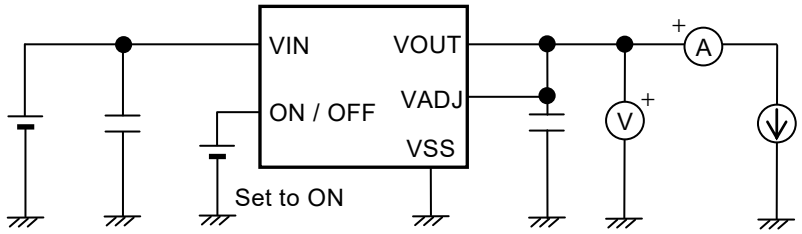

Figure 18 Test Circuit 7

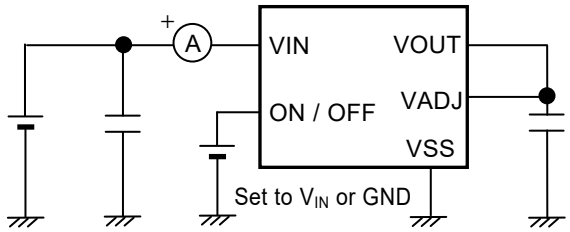

Figure 19 Test Circuit 8

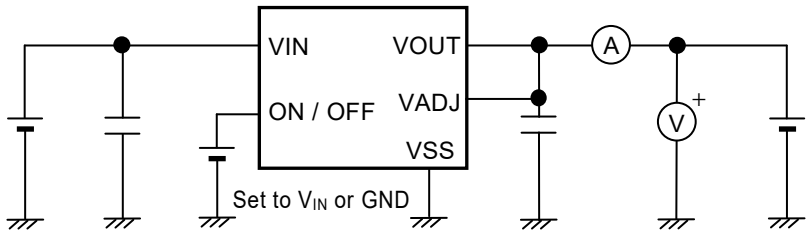

Figure 20 Test Circuit 9

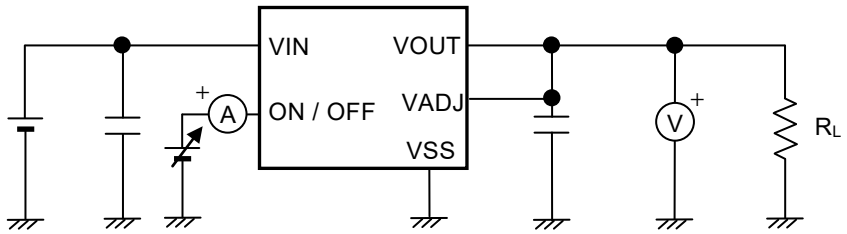

Figure 21 Test Circuit 10

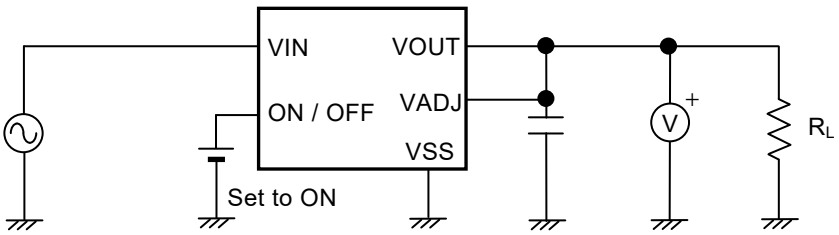

Figure 22 Test Circuit 11

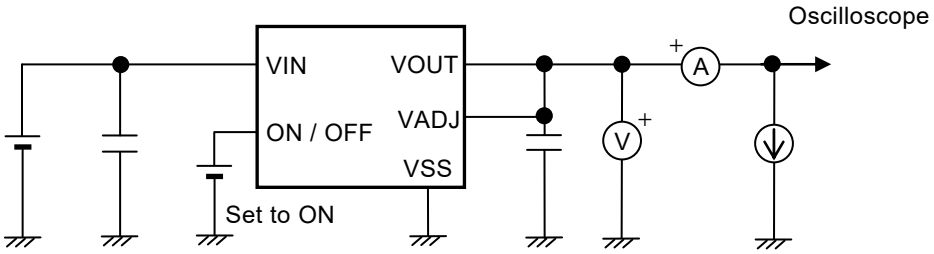

Figure 23 Test Circuit 12

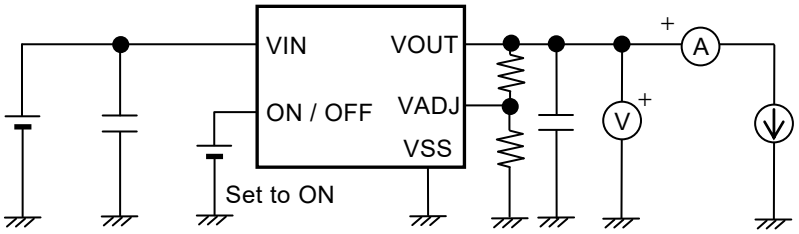

Figure 24 Test Circuit 13

■ Standard Circuits

1. Types in which output voltage is internally set (S-13A1x10 to S-13A1x35)

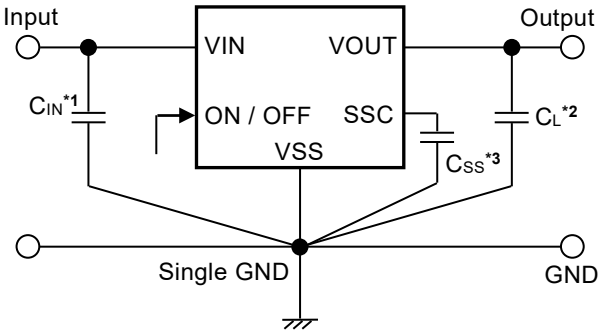

***1.** C_{IN} is a capacitor for stabilizing the input.
***2.** A ceramic capacitor of 2.2 µF or more can be used as C_L.
***3.** A ceramic capacitor of 22 nF or less can be used as C_{SS}.

Figure 25

2. Types in which output voltage is externally set (S-13A1x00)

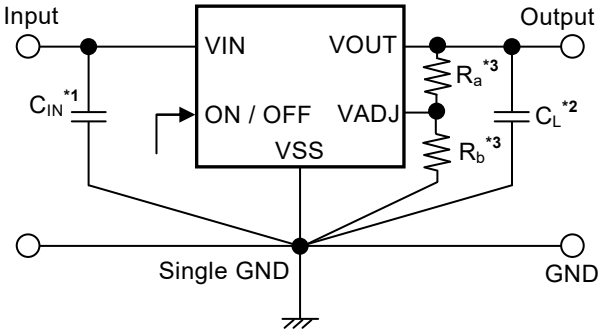

***1.** C_{IN} is a capacitor for stabilizing the input.
***2.** A ceramic capacitor of 2.2 µF or more can be used as C_L.
***3.** Resistor of 0.1 kΩ to 606 kΩ as R_a, 2 kΩ to 200 kΩ as R_b can be used.

Figure 26

Caution The above connection diagram and constant will not guarantee successful operation. Perform thorough evaluation using the actual application to set the constant.

■ Condition of Application

Input capacitor (C_{IN}): 2.2 μF or more
Output capacitor (C_L): 2.2 μF or more

Caution 1. Set input capacitor (C_{IN}) and output capacitor (C_L) as $C_{IN} = C_L$.
2. Generally a series regulator may cause oscillation, depending on the selection of external parts. Confirm that no oscillation occurs in the application for which the above capacitors are used.

■ Selection of Input and Output Capacitors (C_{IN}, C_L)

The S-13A1 Series requires an output capacitor between the VOUT pin and the VSS pin for phase compensation. Operation is stabilized by a ceramic capacitor with an output capacitance of 2.2 μF or more over the entire temperature range. When using an OS capacitor, a tantalum capacitor, or an aluminum electrolytic capacitor, the capacitance must be 2.2 μF or more.
The values of output overshoot and undershoot, which are transient response characteristics, vary depending on the value of the output capacitor.
The required capacitance for the input capacitor differs depending on the application.
Set the capacitance for input capacitor (C_{IN}) and output capacitor (C_L) as follows.

- $C_{IN} \geq 2.2$ μF
- $C_L \geq 2.2$ μF
- $C_{IN} = C_L$

Caution The S-13A1 Series may oscillate if setting the capacitance as $C_{IN} \geq 2.2$ μF, $C_L \geq 2.2$ μF, $C_{IN} < C_L$. Define the values by sufficient evaluation including the temperature characteristics under the usage condition.

■ Selection of Capacitor for Inrush Current Limit (C_{SS}) (Types in Which Output Voltage is Internally Set)

In the S-13A1 Series, the inrush current limit time (t_{RUSH}) is adjustable by connecting a capacitor for inrush current limit (C_{SS}) between the SSC pin and the VSS pin. The time that the output voltage rises to 99% is 0.7 ms typ. when C_{SS} = 1.0 nF. The S-13A1 Series operates stably even with no C_{SS} connection (in the state the SSC pin is leaved open).
The recommended value for C_{SS} is 0 nF[*1] $\leq C_{SS} \leq$ 22 nF, however, define the values by sufficient evaluation including the temperature characteristics under the usage condition.

***1.** In case the S-13A1 Series is used without C_{SS} connection (C_{SS} = 0 nF), be sure to leave the SSC pin open and do not connect it to the VIN pin and the VSS pin.

■ Explanation of Terms

1. Low dropout voltage regulator

This voltage regulator has the low dropout voltage due to its built-in low on-resistance transistor.

2. Output voltage (V_{OUT})

The accuracy of the output voltage is ensured at ±1.0% or ±15 mV*1 under the specified conditions of fixed input voltage*2, fixed output current, and fixed temperature.

***1.** When V_{OUT} < 1.5 V: ±15 mV, when V_{OUT} ≥ 1.5 V: ±1.0%
***2.** Differs depending on the product.

Caution If the above conditions change, the output voltage value may vary and exceed the accuracy range of the output voltage. Refer to "■ Electrical Characteristics" and "■ Characteristics (Typical Data)" for details.

3. Line regulation $\left(\frac{\Delta V_{OUT1}}{\Delta V_{IN} \bullet V_{OUT}}\right)$

Indicates the dependency of the output voltage on the input voltage. That is, the values show how much the output voltage changes due to a change in the input voltage with the output current remaining unchanged.

4. Load regulation (ΔV_{OUT2})

Indicates the dependency of the output voltage on the output current. That is, the values show how much the output voltage changes due to a change in the output current with the input voltage remaining unchanged.

5. Dropout voltage (V_{drop})

Indicates the difference between input voltage (V_{IN1}) and the output voltage when; decreasing input voltage (V_{IN}) gradually until the output voltage has dropped out to the value of 98% of output voltage (V_{OUT3}), which is at $V_{IN} = V_{OUT(S)} + 1.0$ V.

$V_{drop} = V_{IN1} - (V_{OUT3} \times 0.98)$

6. Output voltage temperature coefficient $\left(\frac{\Delta V_{OUT}}{\Delta Ta \bullet V_{OUT}}\right)$

The shaded area in **Figure 27** is the range where V_{OUT} varies in the operation temperature range when the output voltage temperature coefficient is ±100 ppm/°C.

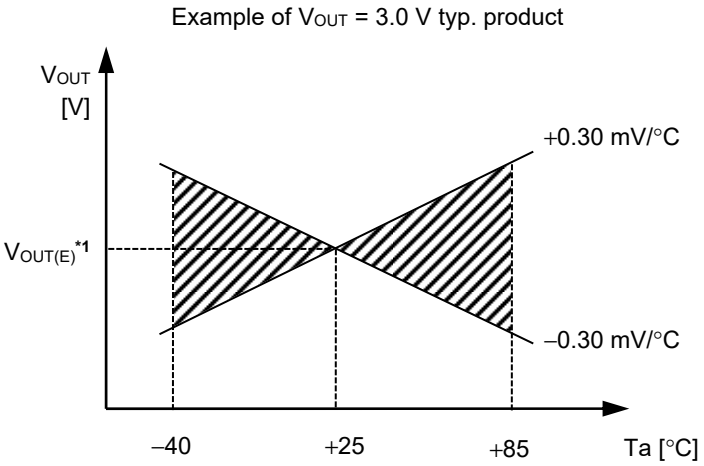

***1.** $V_{OUT(E)}$ is the value of the output voltage measured at Ta = +25°C.

Figure 27

A change in the temperature of the output voltage [mV/°C] is calculated using the following equation.

$$\frac{\Delta V_{OUT}}{\Delta Ta}\ [\text{mV/°C}]^{*1} = V_{OUT(S)}\ [\text{V}]^{*2} \times \frac{\Delta V_{OUT}}{\Delta Ta \bullet V_{OUT}}\ [\text{ppm/°C}]^{*3} \div 1000$$

***1.** Change in temperature of output voltage
***2.** Set output voltage
***3.** Output voltage temperature coefficient

■ Operation

1. Basic operation

Figure 28 shows the block diagram of the S-13A1 Series.
The error amplifier compares the reference voltage (V_{ref}) with feedback voltage (V_{fb}), which is the output voltage resistance-divided by feedback resistors (R_s and R_f). It supplies the gate voltage necessary to maintain the constant output voltage which is not influenced by the input voltage and temperature change, to the output transistor.

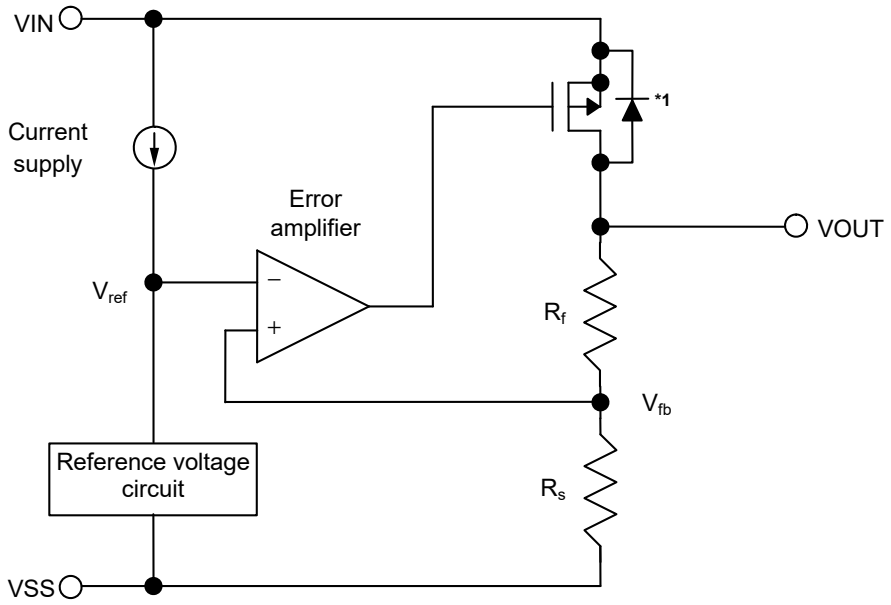

***1**. Parasitic diode

Figure 28

2. Output transistor

In the S-13A1 Series, a low on-resistance P-channel MOS FET is used as the output transistor.
Be sure that V_{OUT} does not exceed V_{IN} + 0.3 V to prevent the voltage regulator from being damaged due to reverse current flowing from the VOUT pin through a parasitic diode to the VIN pin, when the potential of V_{OUT} became higher than V_{IN}.

3. ON / OFF pin

This pin starts and stops the regulator.

When the ON / OFF pin is set to OFF level, the entire internal circuit stops operating, and the built-in P-channel MOS FET output transistor between the VIN pin and the VOUT pin is turned off, reducing current consumption significantly. Note that the current consumption increases when a voltage of 0.3 V to V_{IN} – 0.3 V is applied to the ON / OFF pin.
The ON / OFF pin is configured as shown in **Figure 29** and **Figure 30**.

3. 1 S-13A1 Series A / C type

The ON / OFF pin is internally pulled down to the VSS pin in the floating status, so the VOUT pin is set to the V_{SS} level.

3. 2 S-13A1 Series B / D type

The ON / OFF pin is not internally pulled down to the VSS pin, so do not use these types with the ON / OFF pin in the floating status. When not using the ON / OFF pin, connect the pin to the VIN pin.

Table 17

Product Type	ON / OFF Pin	Internal Circuit	VOUT Pin Voltage	Current Consumption
A / B / C / D	"H": ON	Operate	Set value	I_{SS1}*1
A / B / C / D	"L": OFF	Stop	V_{SS} level	I_{SS2}

***1**. Note that the IC's current consumption increases as much as current flows into the pull-down resistor of 2.5 MΩ typ. when the ON / OFF pin is connected to the VIN pin and the S-13A1 Series A / C type is operating (refer to **Figure 29**).

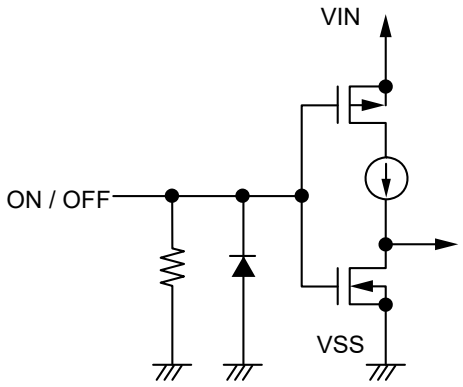

Figure 29 S-13A1 Series A / C type

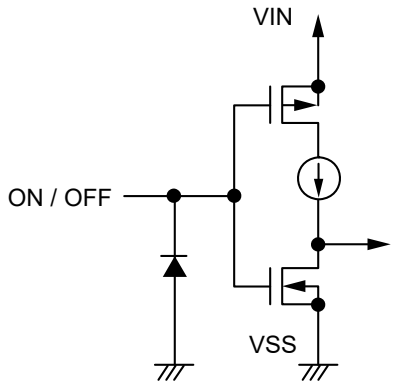

Figure 30 S-13A1 Series B / D type

4. Discharge shunt function (S-13A1 Series A / B type)

The S-13A1 Series A / B type has a built-in discharge shunt circuit to discharge the output capacitance. The output capacitance is discharged as follows so that the VOUT pin reaches the V_{SS} level.

(1) The ON / OFF pin is set to OFF level.
(2) The output transistor is turned off.
(3) The discharge shunt circuit is turned on.
(4) The output capacitor discharges.

Since the S-13A1 Series C / D type does not have a discharge shunt circuit, the VOUT pin is set to the V_{SS} level through several hundred kΩ internal divided resistors between the VOUT pin and the VSS pin. The S-13A1 Series A / B type allows the VOUT pin to reach the V_{SS} level rapidly due to the discharge shunt circuit.

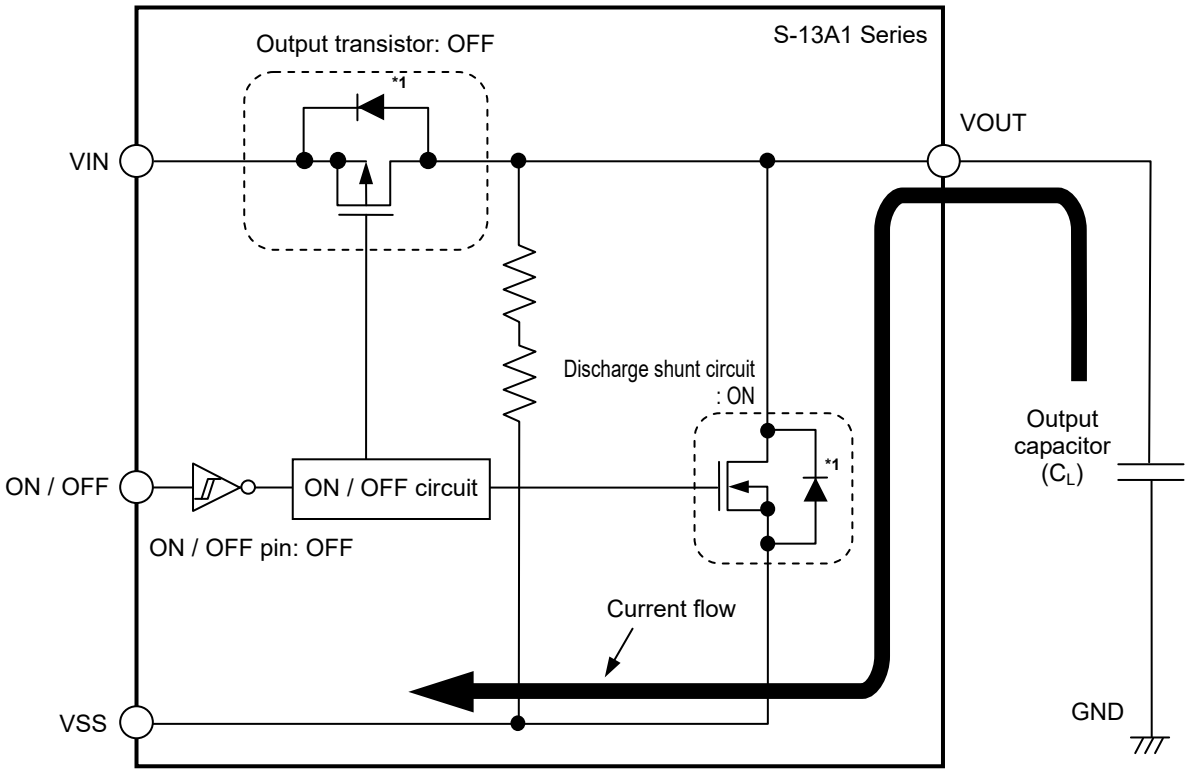

***1**. Parasitic diode

Figure 31

5. Pull-down resistor (S-13A1 Series A / C type)

The ON / OFF pin is internally pulled down to the VSS pin in the floating status, so the VOUT pin is set to the V_{SS} level.

Note that the IC's current consumption increases as much as current flows into the pull-down resistor of 2.5 MΩ typ. when the ON / OFF pin is connected to the VIN pin and the S-13A1 Series A / C type is operating.

6. Overcurrent protection circuit

The S-13A1 Series includes an overcurrent protection circuit having the characteristics shown in "**1. Output Voltage vs. Output Current (When load current increases) (Ta = +25°C)**" in "**■ Characteristics (Typical Data)**", in order to protect the output transistor against an excessive output current and short circuiting between the VOUT pin and the VSS pin. The current when the output pin is short-circuited (I_{short}) is internally set at approx. 200 mA typ., and the normal value is restored for the output voltage, if releasing a short circuit once.

Caution This overcurrent protection circuit does not work as for thermal protection. If this IC long keeps short circuiting inside, pay attention to the conditions of input voltage and load current so that, under the usage conditions including short circuit, the loss of the IC will not exceed power dissipation.

7. Thermal shutdown circuit

The S-13A1 Series has a thermal shutdown circuit to protect the device from damage due to overheat. When the junction temperature rises to 150°C typ., the thermal shutdown circuit operates to stop regulating. When the junction temperature drops to 120°C typ., the thermal shutdown circuit is released to restart regulating.
Due to self-heating of the S-13A1 Series, if the thermal shutdown circuit starts operating, it stops regulating so that the output voltage drops. When regulation stops, the S-13A1 does not itself generate heat so that the IC's temperature drops. When the temperature drops, the thermal shutdown circuit is released to restart regulating, thus the S-13A1 Series generates heat again. Repeating this procedure makes waveform of the output voltage pulse-like form. Stop or restart of regulation continues unless decreasing either or both of the input voltage and the output voltage in order to reduce the internal power consumption, or decreasing the ambient temperature.

Table 18

Thermal Shutdown Circuit	VOUT Pin Voltage
Operation: 150°C typ.*1	V_{SS} level
Release: 120°C typ.*1	Set value

***1.** Junction temperature

8. Inrush current limit circuit

The S-13A1 Series has a built-in inrush current limit circuit to limit the inrush current and the overshoot of the output voltage generated at power-on or at the time when the ON / OFF pin is set to ON. The inrush current is limited to 500 mA typ. The inrush current limit circuit starts to operate from the following times.

- Immediately after power-on
- At the time when the ON / OFF pin is set to ON

Figure 32 shows the relation between the inrush current limit time (t_{RUSH}) and the inrush current limit capacitor (C_{SS}).

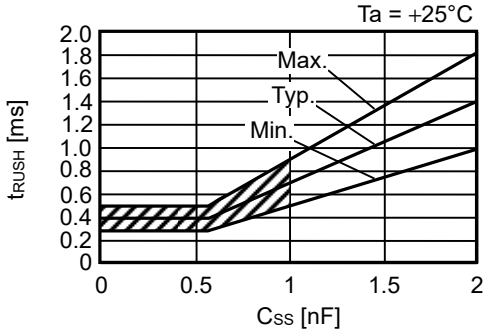

Figure 32

(1) C_{SS} = 0 nF

t_{RUSH} is determined by the internal capacitor (about 20 pF) and the time constant of the built-in constant current (about 0.04 μA). t_{RUSH} value is 0.28 ms min., 0.40 ms typ., 0.52 ms max.

(2) $C_{SS} \geq$ 1 nF

t_{RUSH} can be adjusted by the C_{SS} which is connected externally between the SSC pin and the VSS pin. It is calculated by the following formula depending on the built-in constant (about 1 μA) and the C_{SS} time constant.
The inrush current limit coefficient is 0.49 min., 0.7 typ., 0.91 max. at Ta = +25°C.

t_{RUSH} [ms] = the inrush current limit coefficient × C_{SS} [nF]

(3) 0 nF < C_{SS} < 1 nF

Since the internal capacitor, the built-in constant current and C_{SS} have a variation each, t_{RUSH} is the one of following (a) and (b) in which the time is longer.

(a) The time determined by the internal capacitor (about 20 pF) and the time constant of the built-in constant current (about 0.04 μA).
(b) The time determined by C_{SS} connected externally between the SSC pin and the VSS pin and the built-in constant current (about 1 μA).

When 0 nF < C_{SS}< 1 nF, t_{RUSH} is the range of the shaded area shown in **Figure 32**.

9. Externally setting output voltage

The S-13A1 Series provides the types in which output voltage can be set via the external resistor. The output voltage can be set by connecting a resistor (R_a) between the VOUT pin and the VADJ pin, and a resistor (R_b) between the VADJ pin and the VSS pin.
The output voltage is determined by the following formulas.

$V_{OUT} = 1.0 + R_a \times I_a$ ·····(1)
By substituting $I_a = I_{VADJ} + 1.0 / R_b$ to above formula (1),
$V_{OUT} = 1.0 + R_a \times (I_{VADJ} + 1.0 / R_b) = 1.0 \times (1.0 + R_a / R_b) + R_a \times I_{VADJ}$ ·····(2)

In above formula (2), $R_a \times I_{VADJ}$ is a factor for the output voltage error.
Whether the output voltage error is minute is judged depending on the following (3) formula.

By substituting $I_{VADJ} = 1.0 / R_{VADJ}$ to $R_a \times I_{VADJ}$
$V_{OUT} = 1.0 \times (1.0 + R_a / R_b) + 1.0 \times R_a / R_{VADJ}$ ·····(3)

If R_{VADJ} is sufficiently larger than R_a, the error is judged as minute.

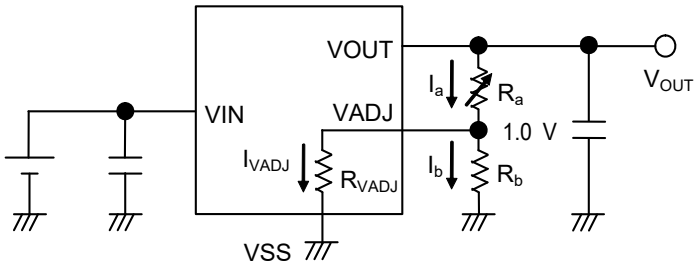

Figure 33

The following expression is in order to determine output voltage V_{OUT} = 3.0 V.
If resistance R_b = 2 kΩ, substitute R_{VADJ} = 400 kΩ typ. into (3),
Resistance $R_a = (3.0 / 1.0 - 1) \times ((2\text{ k} \times 400\text{ k}) / (2\text{ k} + 400\text{ k})) \cong 4.0$ kΩ

Caution The above connection diagrams and constants will not guarantee successful operation. Perform thorough evaluation using the actual application to set the constants.

■ Precautions

- Wiring patterns for the VIN pin, the VOUT pin and GND should be designed so that the impedance is low. When mounting an output capacitor between the VOUT pin and the VSS pin (C_L), a capacitor for stabilizing the input between the VIN pin and the VSS pin (C_{IN}), and a capacitor for limiting the inrush current between the SSC pin and the VSS pin (C_{SS}), the distance from the capacitors to these pins should be as short as possible.
- Note that generally the output voltage may increase when a series regulator is used at low load current (1.0 mA or less).
- Note that generally the output voltage may increase due to the leakage current from an output driver when a series regulator is used at high temperature.
- Note that the output voltage may increase due to the leakage current from an output driver even if the ON / OFF pin is at OFF level when a series regulator is used at high temperature.
- Generally a series regulator may cause oscillation, depending on the selection of external parts. The following conditions are recommended for the S-13A1 Series. However, be sure to perform sufficient evaluation under the actual usage conditions for selection, including evaluation of temperature characteristics. Refer to "**6. Example of equivalent series resistance vs. Output current characteristics (Ta = +25°C)**" in "**■ Reference Data**" for the equivalent series resistance (R_{ESR}) of the output capacitor.

  Input capacitor (C_{IN}): 2.2 μF or more
  Output capacitor (C_L): 2.2 μF or more

- The voltage regulator may oscillate when the impedance of the power supply is high and the input capacitance is small or an input capacitor is not connected.
- If the output capacitance is small, power supply's fluctuation and the characteristics of load fluctuation become worse. Sufficiently evaluate the output voltage's fluctuation with the actual device.
- Overshoot may occur in the output voltage momentarily if the voltage is rapidly raised at power-on or when the power supply fluctuates. Sufficiently evaluate the output voltage at power-on with the actual device.
- The application conditions for the input voltage, the output voltage, and the load current should not exceed the power dissipation.
- Do not apply an electrostatic discharge to this IC that exceeds the performance ratings of the built-in electrostatic protection circuit.
- In determining the output current, attention should be paid to the output current value specified in **Table 15** and **Table 16** in "**■ Electrical Characteristics**" and footnote ***5** of the table.
- ABLIC Inc. claims no responsibility for any disputes arising out of or in connection with any infringement by products including this IC of patents owned by a third party.

■ Characteristics (Typical Data)

1. Output voltage vs. Output current (When load current increases) (Ta = +25°C)

1. 1 V_{OUT} = 1.0 V

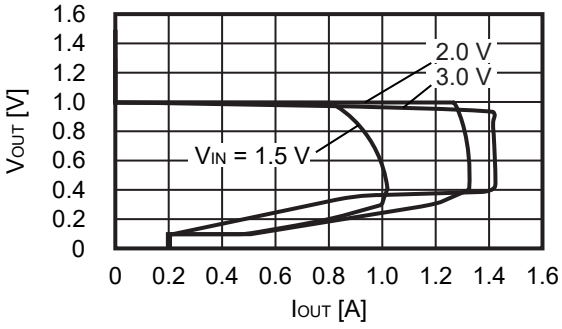

1. 2 V_{OUT} = 2.5 V

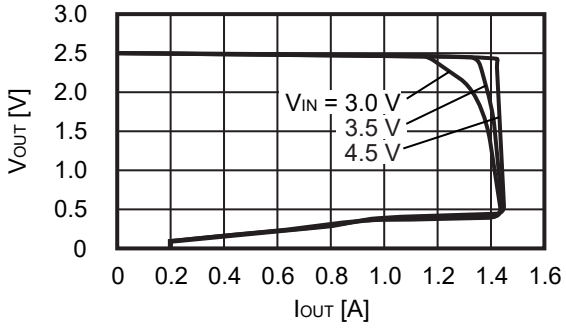

1. 3 V_{OUT} = 3.5 V

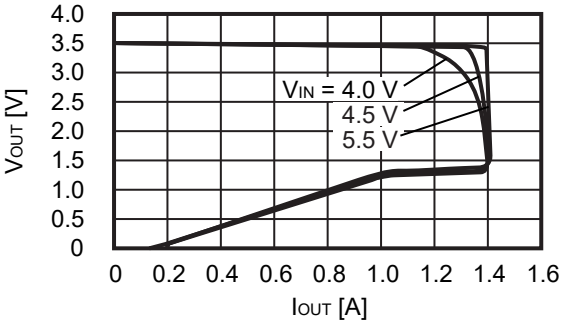

Remark In determining the output current, attention should be paid to the following.
1. The minimum output current value and footnote ***5** of **Table 15** and **Table 16** in "■ **Electrical Characteristics**"
2. The power dissipation

2. Output voltage vs. Input voltage (Ta = +25°C)

2. 1 V_{OUT} = 1.0 V

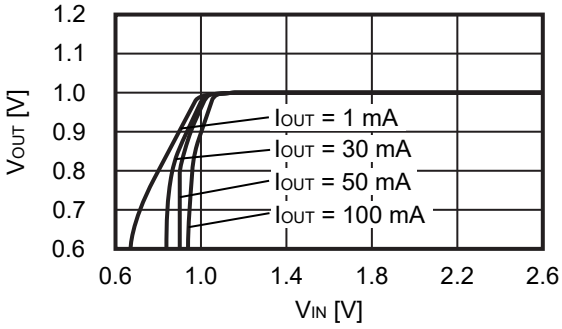

2. 2 V_{OUT} = 2.5 V

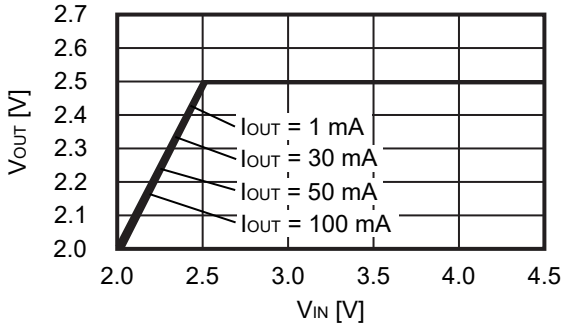

2. 3 V_{OUT} = 3.5 V

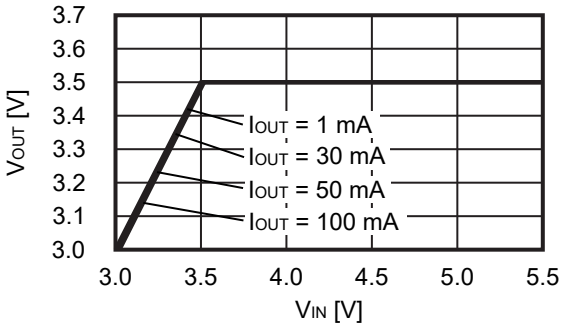

3. Dropout voltage vs. Output current

3. 1 V_{OUT} = 1.0 V

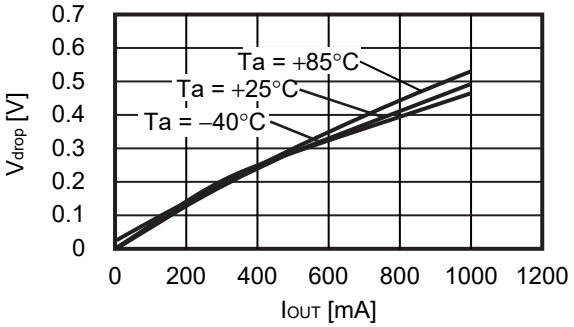

3. 2 V_{OUT} = 2.5 V

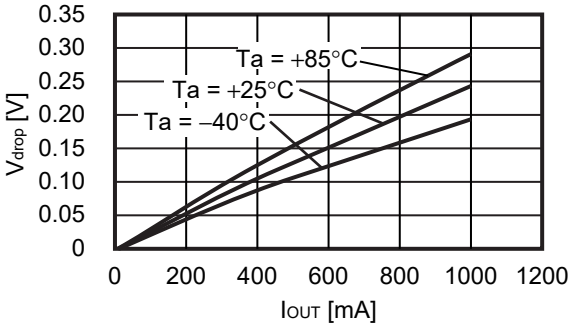

3. 3 V_{OUT} = 3.5 V

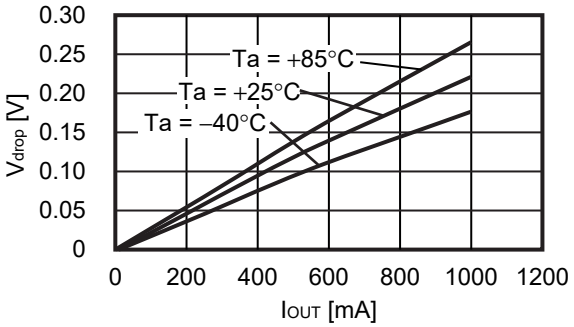

4. Dropout voltage vs. Set output voltage

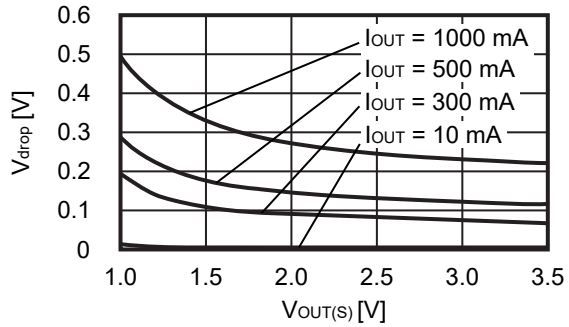

5. Output voltage vs. Ambient temperature

5. 1 V_{OUT} = 1.0 V

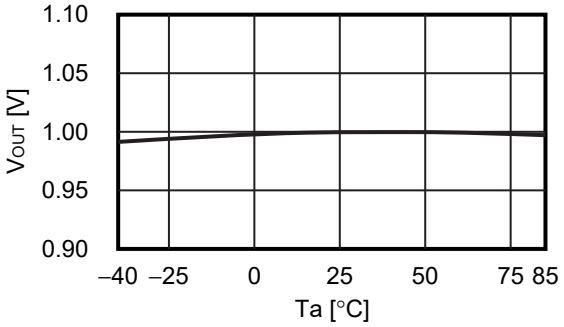

5. 2 V_{OUT} = 2.5 V

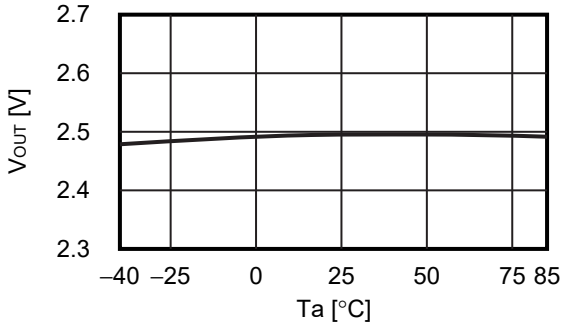

5. 3 V_{OUT} = 3.5 V

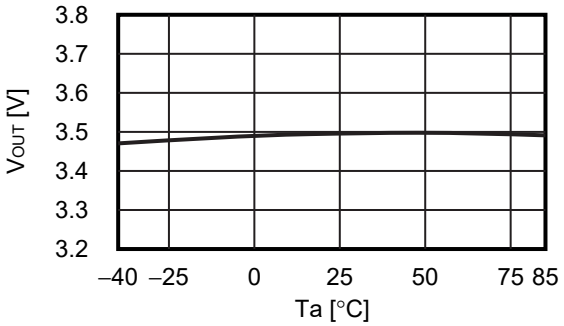

6. Current consumption vs. Input voltage

6. 1 V_{OUT} = 1.0 V

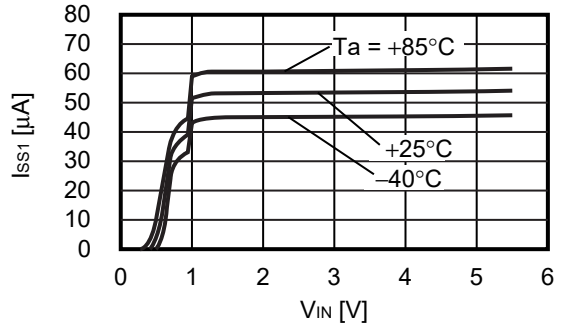

6. 2 V_{OUT} = 2.5 V

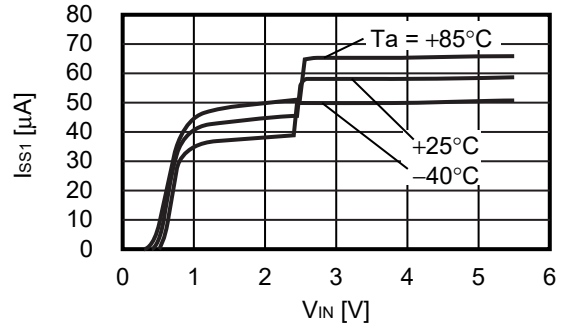

6. 3 V_{OUT} = 3.5 V

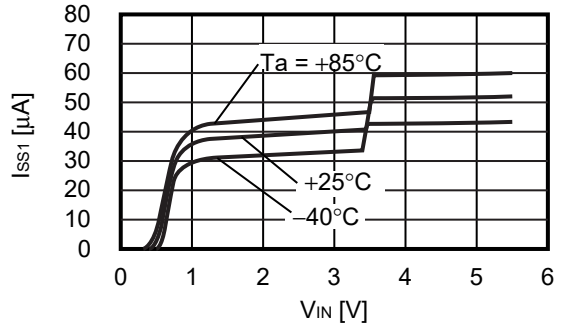

7. Ripple rejection (Ta = +25°C)

7. 1 V_{OUT} = 1.0 V

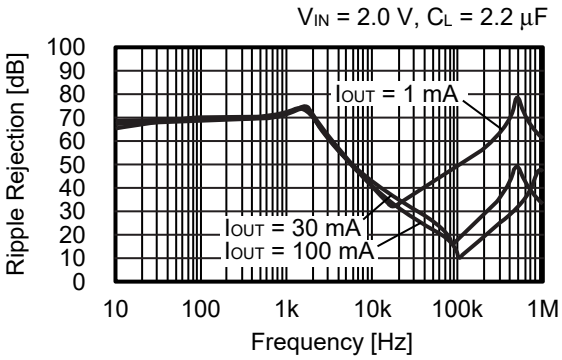

7. 2 V_{OUT} = 2.5 V

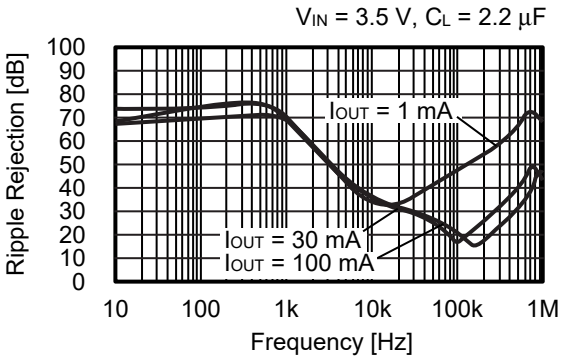

7. 3 V_{OUT} = 3.5 V

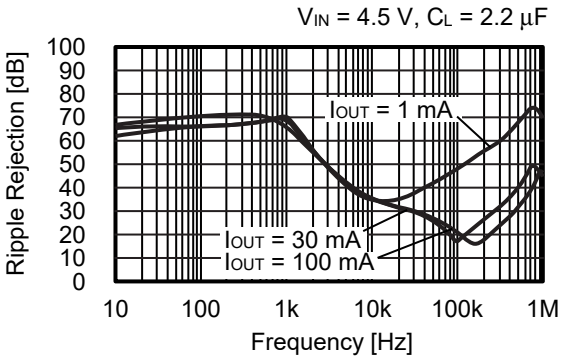

■ Reference Data

1. Transient response characteristics when input (Ta = +25°C)

1. 1 V_{OUT} = 1.0 V

I_{OUT} = 100 mA, C_{IN} = C_L = 2.2 µF,
V_{IN} = 2.0 V ↔ 3.0 V, t_r = t_f = 5.0 µs

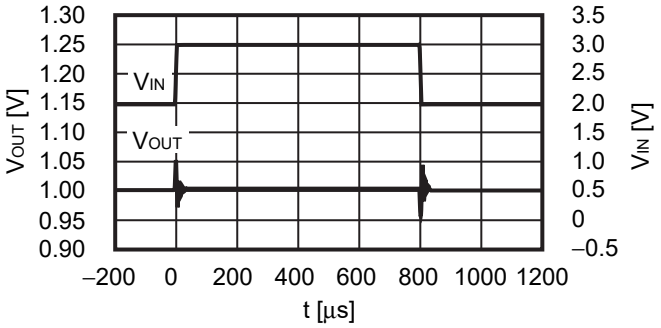

1. 2 V_{OUT} = 2.5 V

I_{OUT} = 100 mA, C_{IN} = C_L = 2.2 µF,
V_{IN} = 3.5 V ↔ 4.5 V, t_r = t_f = 5.0 µs

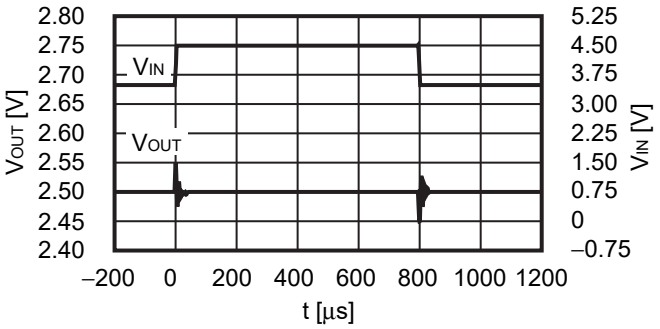

1. 3 V_{OUT} = 3.5 V

I_{OUT} = 100 mA, C_{IN} = C_L = 2.2 µF,
V_{IN} = 4.5 V ↔ 5.5 V, t_r = t_f = 5.0 µs

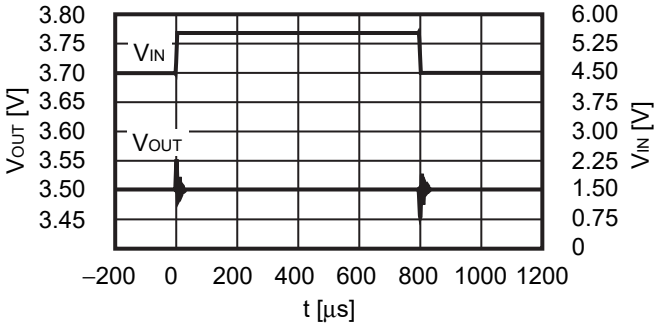

2. Transient response characteristics of load (Ta = +25°C)

2. 1 V_{OUT} = 1.0 V

V_{IN} = 2.0 V, C_{IN} = C_L = 2.2 µF, I_{OUT} = 50 mA ↔ 100 mA

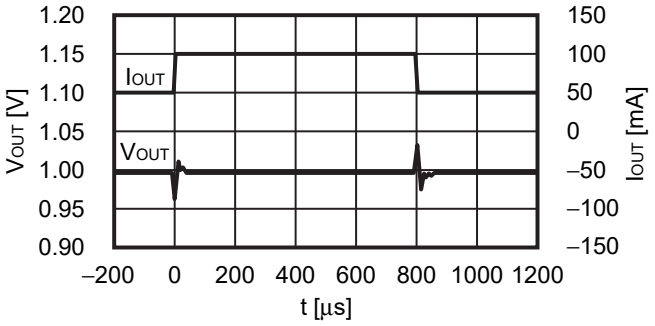

V_{IN} = 2.0 V, C_{IN} = C_L = 2.2 µF, I_{OUT} = 100 mA ↔ 500 mA

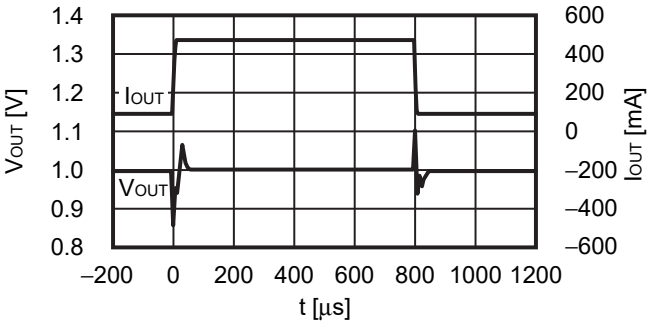

2. 2 V_{OUT} = 2.5 V

V_{IN} = 3.5 V, C_{IN} = C_L = 2.2 µF, I_{OUT} = 50 mA ↔ 100 mA

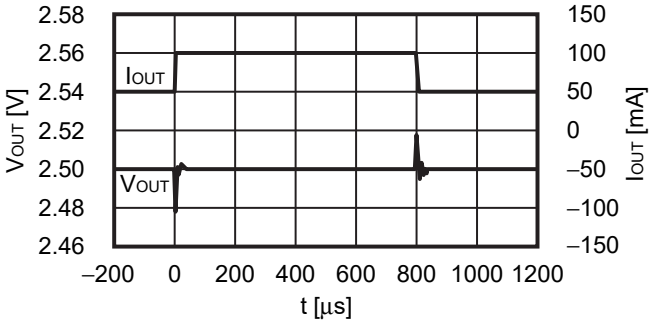

V_{IN} = 3.5 V, C_{IN} = C_L = 2.2 µF, I_{OUT} = 100 mA ↔ 500 mA

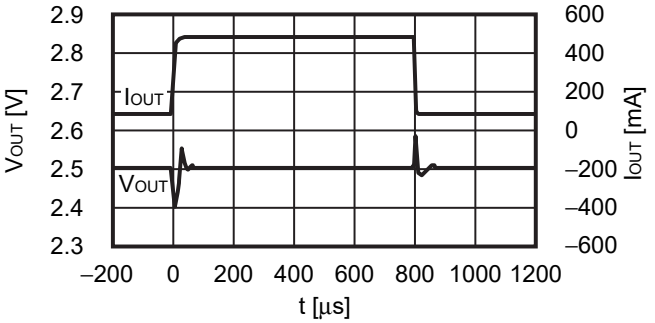

2. 3 V_{OUT} = 3.5 V

V_{IN} = 4.5 V, C_{IN} = C_L = 2.2 µF, I_{OUT} = 50 mA ↔ 100 mA

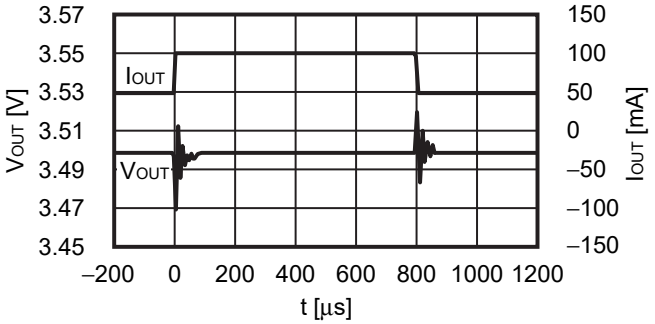

V_{IN} = 4.5 V, C_{IN} = C_L = 2.2 µF, I_{OUT} = 100 mA ↔ 500 mA

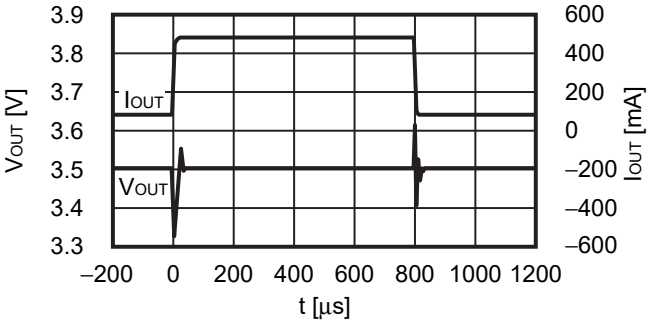

3. Transient response characteristics of ON / OFF pin (Ta = +25°C)

3. 1 V_{OUT} = 1.0 V

V_{IN} = 2.0 V, C_{IN} = C_L = 2.2 µF, I_{OUT} = 100 mA,
$V_{ON / OFF}$ = 0 V → 2.0 V, t_r = 1.0 µs

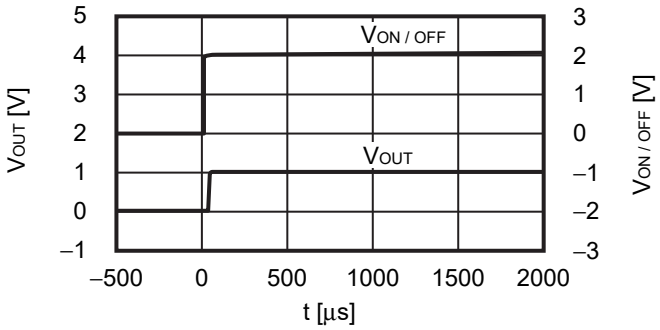

3. 2 V_{OUT} = 2.5 V

V_{IN} = 3.5 V, C_{IN} = C_L = 2.2 µF, I_{OUT} = 100 mA,
$V_{ON / OFF}$ = 0 V → 3.5 V, t_r = 1.0 µs

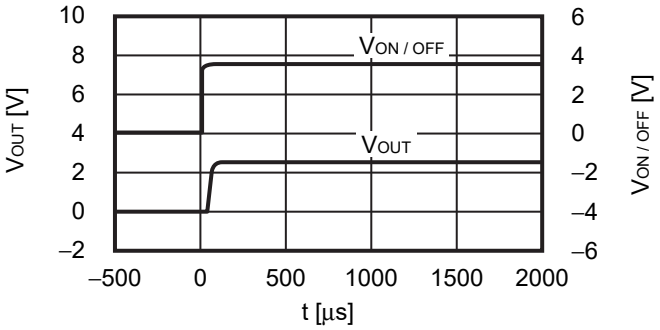

3. 3 V_{OUT} = 3.5 V

V_{IN} = 4.5 V, C_{IN} = C_L = 2.2 µF, I_{OUT} = 100 mA,
$V_{ON / OFF}$ = 0 V → 4.5 V, t_r = 1.0 µs

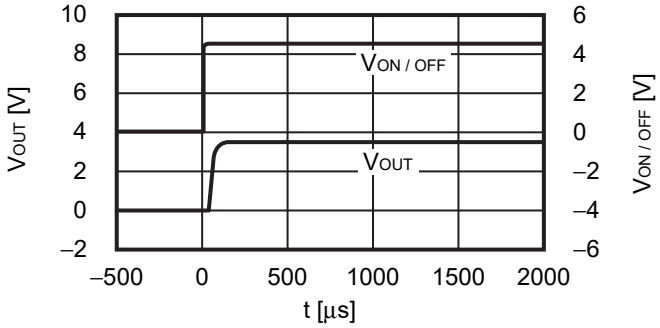

4. Characteristics of inrush current (Ta = +25°C)

4. 1 V_{OUT} = 1.0 V

V_{IN} = 2.0 V, C_{IN} = C_L = 2.2 µF, C_{SS} = 0 nF, I_{OUT} = 100 mA,
$V_{ON / OFF}$ = 0 V → 2.0 V, t_r = 1.0 µs

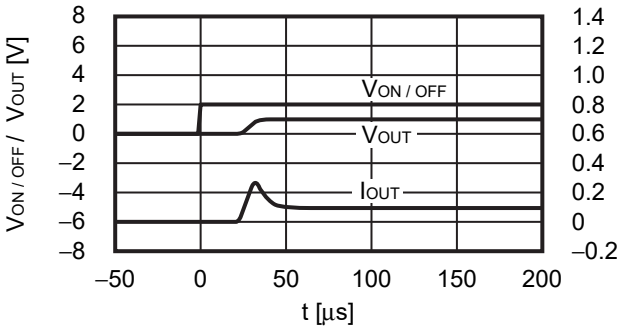

V_{IN} = 2.0 V, C_{IN} = C_L = 2.2 µF, C_{SS} = 0 nF, I_{OUT} = 1000 mA,
$V_{ON / OFF}$ = 0 V → 2.0 V, t_r = 1.0 µs

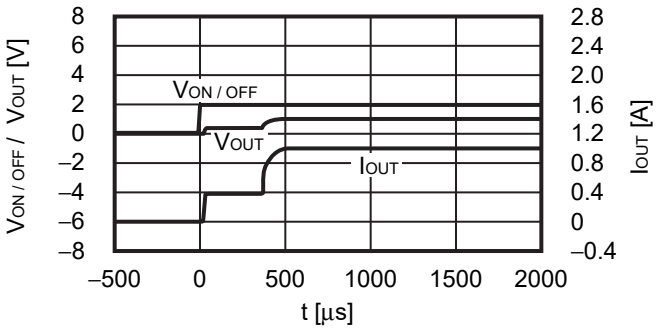

4. 2 V_{OUT} = 2.5 V

V_{IN} = 3.5 V, C_{IN} = C_L = 2.2 µF, C_{SS} = 0 nF, I_{OUT} = 100 mA,
$V_{ON / OFF}$ = 0 V → 3.5 V, t_r = 1.0 µs

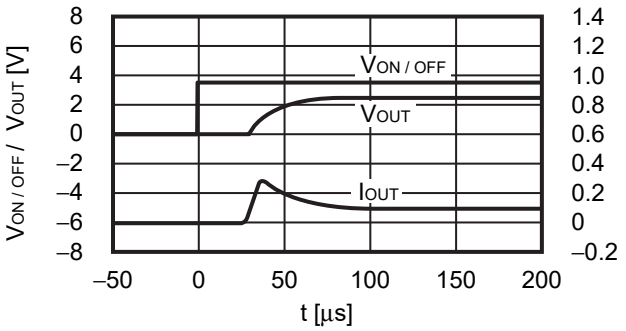

V_{IN} = 3.5 V, C_{IN} = C_L = 2.2 µF, C_{SS} = 0 nF, I_{OUT} = 1000 mA,
$V_{ON / OFF}$ = 0 V → 3.5 V, t_r = 1.0 µs

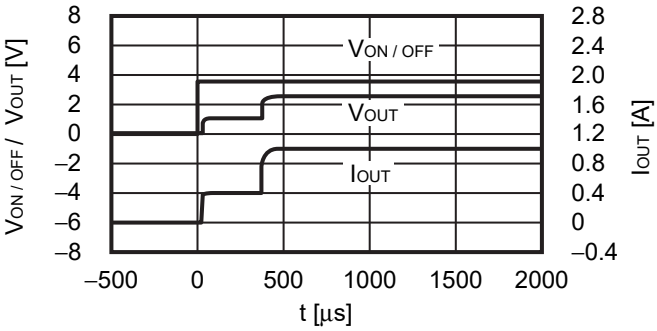

4. 3 V_{OUT} = 3.5 V

V_{IN} = 4.5 V, C_{IN} = C_L = 2.2 µF, C_{SS} = 0 nF, I_{OUT} = 100 mA,
$V_{ON / OFF}$ = 0 V → 4.5 V, t_r = 1.0 µs

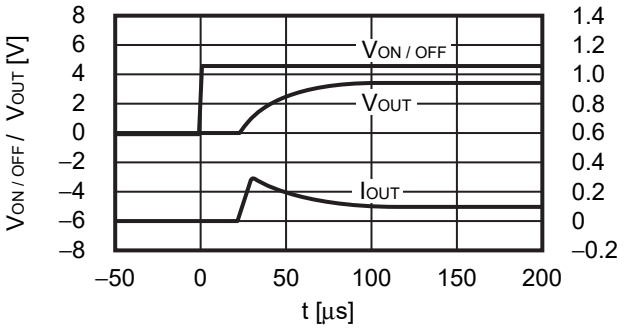

V_{IN} = 4.5 V, C_{IN} = C_L = 2.2 µF, C_{SS} = 0 nF, I_{OUT} = 1000 mA,
$V_{ON / OFF}$ = 0 V → 4.5 V, t_r = 1.0 µs

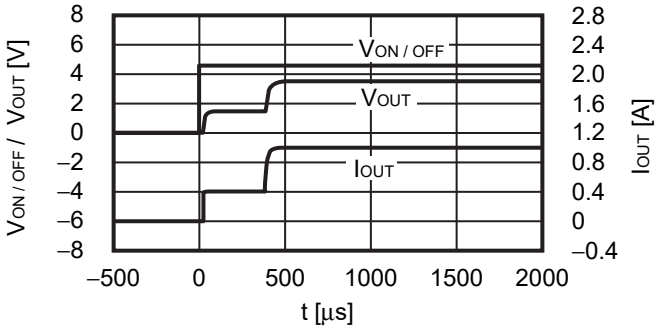

5. Output capacitance vs. Characteristics of discharge time (Ta = +25°C)

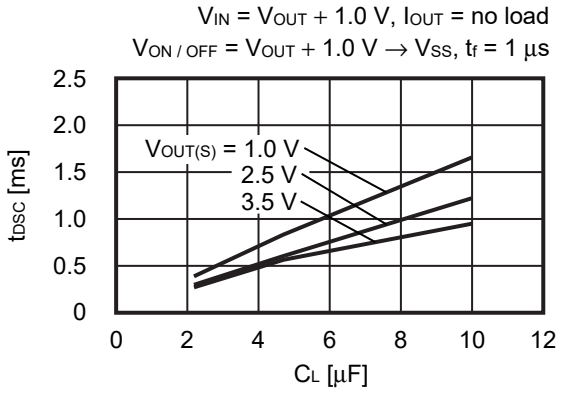

Figure 34 S-13A1 Series A / B type (with discharge shunt function)

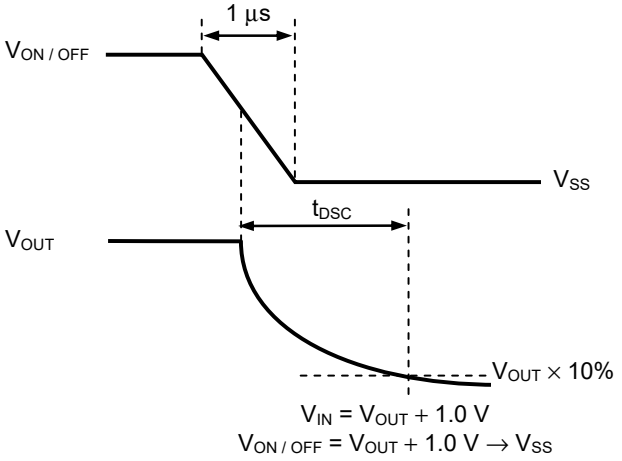

Figure 35 Measurement Condition of Discharge Time

6. Example of equivalent series resistance vs. Output current characteristics (Ta = +25°C)

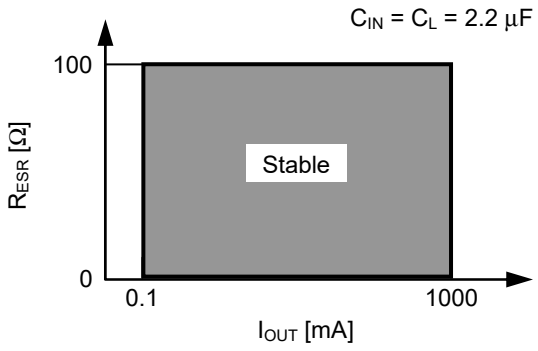

Figure 36

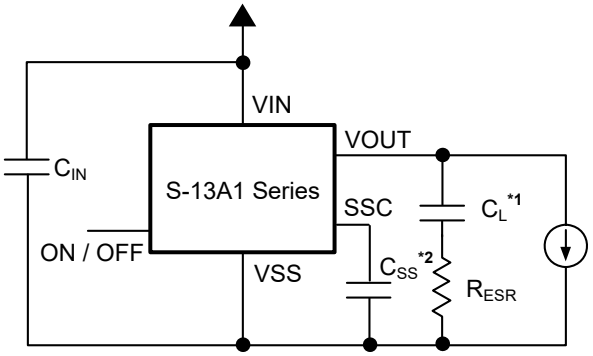

***1.** CL: TDK Corporation C3225X8R1E225K (2.2 µF)
***2.** CSS: Murata Manufacturing Co., Ltd. GRM1882C1H102JA01 (1.0 nF)

Figure 37

■ Marking Specifications

1. HSOP-8A

Top view

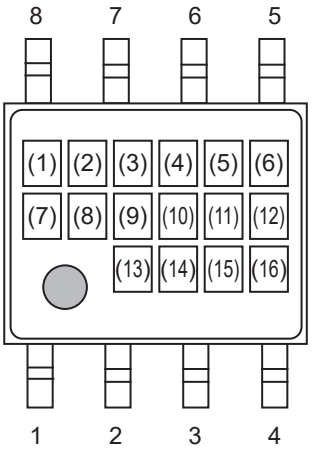

(1) to (5): Product name: S13A1 (Fixed)
(6): Product type
(7) and (8): Value of output voltage
(9) to (16): Lot number

2. HSOP-6

Top view

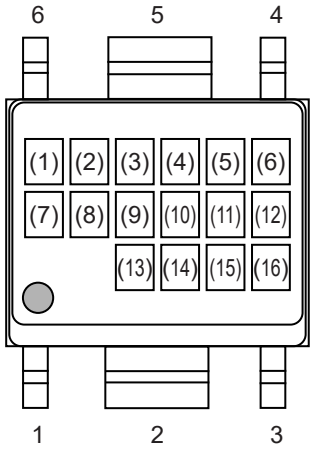

(1) to (5): Product name: S13A1 (Fixed)
(6): Product type
(7) and (8): Value of output voltage
(9) to (16): Lot number

3. SOT-89-5

Top view

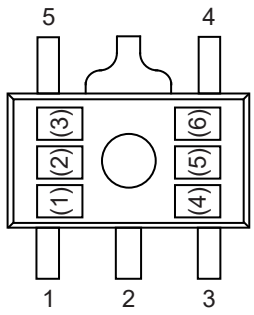

(1) to (3): Product code (Refer to **Product name vs. Product code**)
(4) to (6): Lot number

Product name vs. Product code

3. 1 S-13A1 Series A type

Product Name	Product Code		
	(1)	(2)	(3)
S-13A1A00-U5T1U3	W	R	A
S-13A1A12-U5T1U3	W	R	D
S-13A1A18-U5T1U3	W	R	J
S-13A1A25-U5T1U3	W	R	R
S-13A1A33-U5T1U3	W	R	2

3. 2 S-13A1 Series B type

Product Name	Product Code		
	(1)	(2)	(3)
S-13A1B00-U5T1U3	W	S	A
S-13A1B12-U5T1U3	W	S	D
S-13A1B18-U5T1U3	W	S	J
S-13A1B25-U5T1U3	W	S	R
S-13A1B33-U5T1U3	W	S	2

3. 3 S-13A1 Series C type

Product Name	Product Code		
	(1)	(2)	(3)
S-13A1C00-U5T1U3	W	T	A
S-13A1C12-U5T1U3	W	T	D
S-13A1C18-U5T1U3	W	T	J
S-13A1C25-U5T1U3	W	T	R
S-13A1C33-U5T1U3	W	T	2

3. 4 S-13A1 Series D type

Product Name	Product Code		
	(1)	(2)	(3)
S-13A1D00-U5T1U3	W	U	A
S-13A1D12-U5T1U3	W	U	D
S-13A1D18-U5T1U3	W	U	J
S-13A1D25-U5T1U3	W	U	R
S-13A1D33-U5T1U3	W	U	2

■ Power Dissipation

HSOP-8A

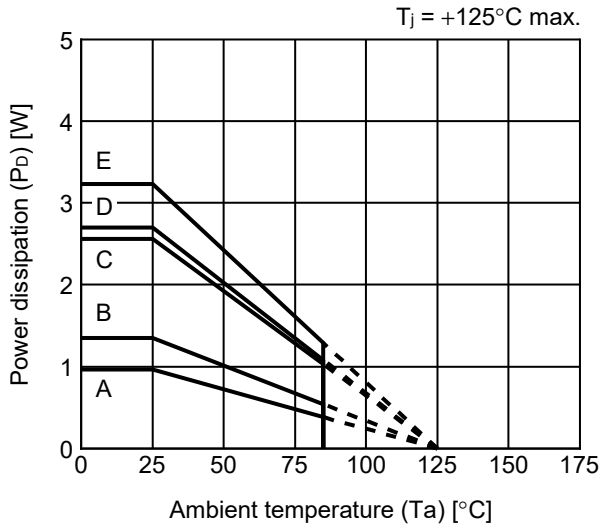

Board	Power Dissipation (P_D)
A	0.96 W
B	1.35 W
C	2.56 W
D	2.70 W
E	3.23 W

HSOP-6

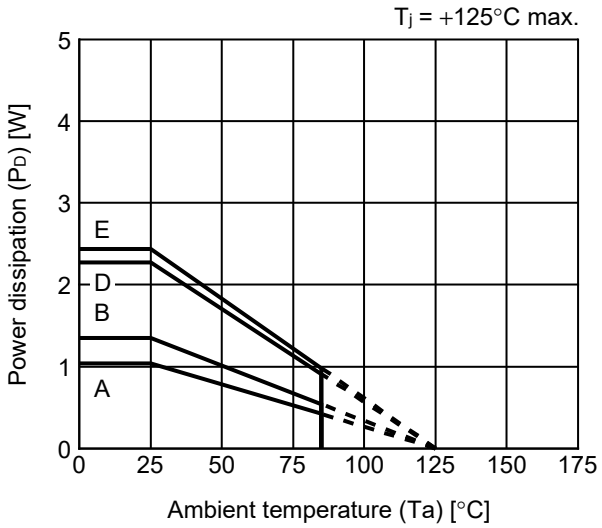

Board	Power Dissipation (P_D)
A	1.04 W
B	1.35 W
C	–
D	2.27 W
E	2.44 W

SOT-89-5

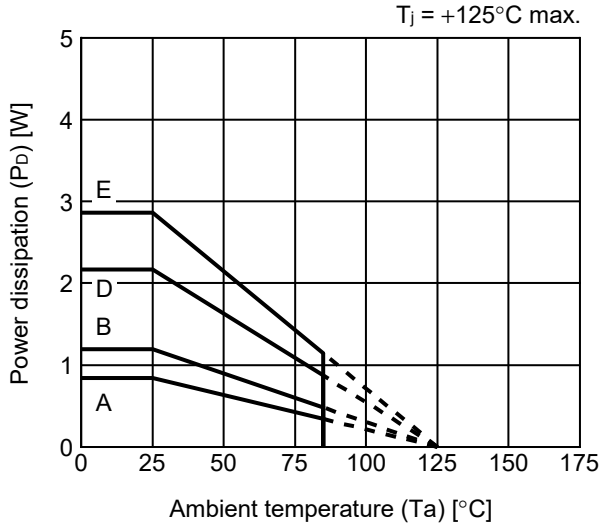

A	0.84 W
B	1.19 W
C	–
D	2.17 W
E	2.86 W

HSOP-8A Test Board

(1) Board A

IC Mount Area

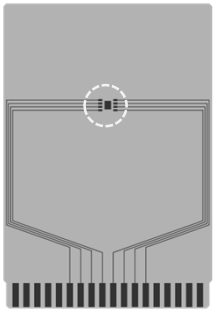

Item		Specification
Size [mm]		114.3 x 76.2 x t1.6
Material		FR-4
Number of copper foil layer		2
Copper foil layer [mm]	1	Land pattern and wiring for testing: t0.070
	2	-
	3	-
	4	74.2 x 74.2 x t0.070
Thermal via		-

(2) Board B

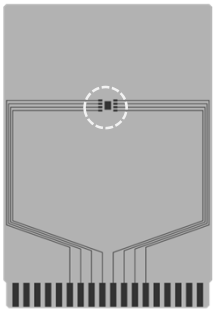

Item		Specification
Size [mm]		114.3 x 76.2 x t1.6
Material		FR-4
Number of copper foil layer		4
Copper foil layer [mm]	1	Land pattern and wiring for testing: t0.070
	2	74.2 x 74.2 x t0.035
	3	74.2 x 74.2 x t0.035
	4	74.2 x 74.2 x t0.070
Thermal via		-

(3) Board C

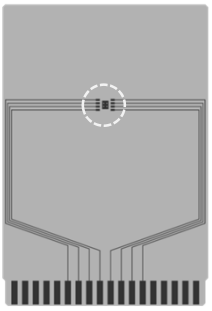

Item		Specification
Size [mm]		114.3 x 76.2 x t1.6
Material		FR-4
Number of copper foil layer		4
Copper foil layer [mm]	1	Land pattern and wiring for testing: t0.070
	2	74.2 x 74.2 x t0.035
	3	74.2 x 74.2 x t0.035
	4	74.2 x 74.2 x t0.070
Thermal via		Number: 4 Diameter: 0.3 mm

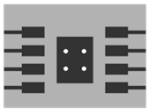

enlarged view

No. HSOP8A-A-Board-SD-1.0

HSOP-8A Test Board

(4) Board D

IC Mount Area

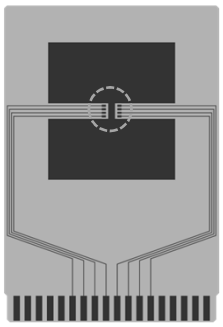

Item		Specification
Size [mm]		114.3 x 76.2 x t1.6
Material		FR-4
Number of copper foil layer		4
Copper foil layer [mm]	1	Pattern for heat radiation: 2000mm2 t0.070
	2	74.2 x 74.2 x t0.035
	3	74.2 x 74.2 x t0.035
	4	74.2 x 74.2 x t0.070
Thermal via		-

(5) Board E

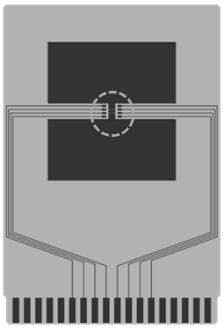

Item		Specification
Size [mm]		114.3 x 76.2 x t1.6
Material		FR-4
Number of copper foil layer		4
Copper foil layer [mm]	1	Pattern for heat radiation: 2000mm^2 t0.070
	2	74.2 x 74.2 x t0.035
	3	74.2 x 74.2 x t0.035
	4	74.2 x 74.2 x t0.070
Thermal via		Number: 4 Diameter: 0.3 mm

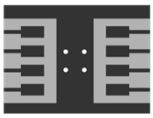

enlarged view

No. HSOP8A-A-Board-SD-1.0

HSOP-6 Test Board

IC Mount Area

(1) Board A

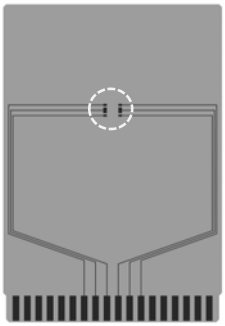

Item		Specification
Size [mm]		114.3 x 76.2 x t1.6
Material		FR-4
Number of copper foil layer		2
Copper foil layer [mm]	1	Land pattern and wiring for testing: t0.070
	2	-
	3	-
	4	74.2 x 74.2 x t0.070
Thermal via		-

(2) Board B

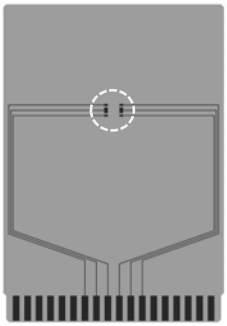

Item		Specification
Size [mm]		114.3 x 76.2 x t1.6
Material		FR-4
Number of copper foil layer		4
Copper foil layer [mm]	1	Land pattern and wiring for testing: t0.070
	2	74.2 x 74.2 x t0.035
	3	74.2 x 74.2 x t0.035
	4	74.2 x 74.2 x t0.070
Thermal via		-

(3) Board D

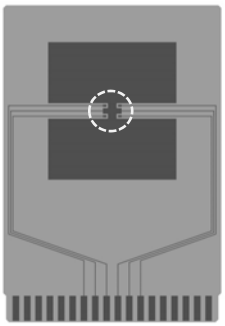

Item		Specification
Size [mm]		114.3 x 76.2 x t1.6
Material		FR-4
Number of copper foil layer		4
Copper foil layer [mm]	1	Pattern for heat radiation: 2000mm^2 t0.070
	2	74.2 x 74.2 x t0.035
	3	74.2 x 74.2 x t0.035
	4	74.2 x 74.2 x t0.070
Thermal via		-

(4) Board E

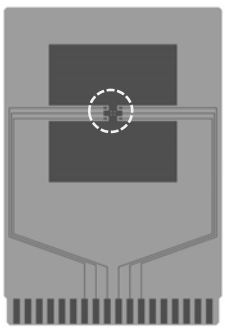

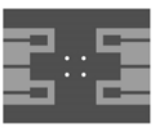

enlarged view

Item		Specification
Size [mm]		114.3 x 76.2 x t1.6
Material		FR-4
Number of copper foil layer		4
Copper foil layer [mm]	1	Pattern for heat radiation: 2000mm^2 t0.070
	2	74.2 x 74.2 x t0.035
	3	74.2 x 74.2 x t0.035
	4	74.2 x 74.2 x t0.070
Thermal via		Number: 4 Diameter: 0.3 mm

No. HSOP6-A-Board-SD-1.0

SOT-89-5 Test Board

IC Mount Area

(1) Board A

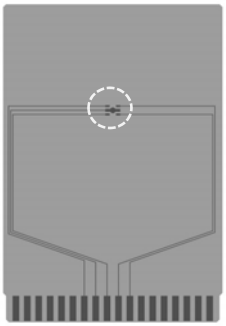

Item		Specification
Size [mm]		114.3 x 76.2 x t1.6
Material		FR-4
Number of copper foil layer		2
Copper foil layer [mm]	1	Land pattern and wiring for testing: t0.070
	2	-
	3	-
	4	74.2 x 74.2 x t0.070
Thermal via		-

(2) Board B

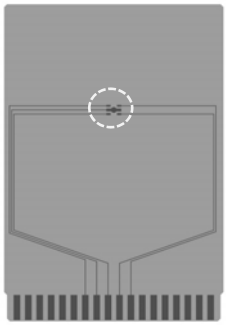

Item		Specification
Size [mm]		114.3 x 76.2 x t1.6
Material		FR-4
Number of copper foil layer		4
Copper foil layer [mm]	1	Land pattern and wiring for testing: t0.070
	2	74.2 x 74.2 x t0.035
	3	74.2 x 74.2 x t0.035
	4	74.2 x 74.2 x t0.070
Thermal via		-

(3) Board D

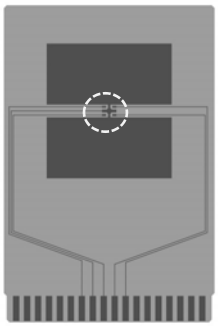

Item		Specification
Size [mm]		114.3 x 76.2 x t1.6
Material		FR-4
Number of copper foil layer		4
Copper foil layer [mm]	1	Pattern for heat radiation: 2000mm^2 t0.070
	2	74.2 x 74.2 x t0.035
	3	74.2 x 74.2 x t0.035
	4	74.2 x 74.2 x t0.070
Thermal via		-

(4) Board E

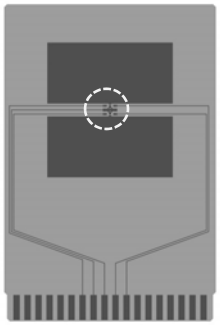



enlarged view

Item		Specification
Size [mm]		114.3 x 76.2 x t1.6
Material		FR-4
Number of copper foil layer		4
Copper foil layer [mm]	1	Pattern for heat radiation: 2000mm^2 t0.070
	2	74.2 x 74.2 x t0.035
	3	74.2 x 74.2 x t0.035
	4	74.2 x 74.2 x t0.070
Thermal via		Number: 4 Diameter: 0.3 mm

No. SOT895-A-Board-SD-1.0

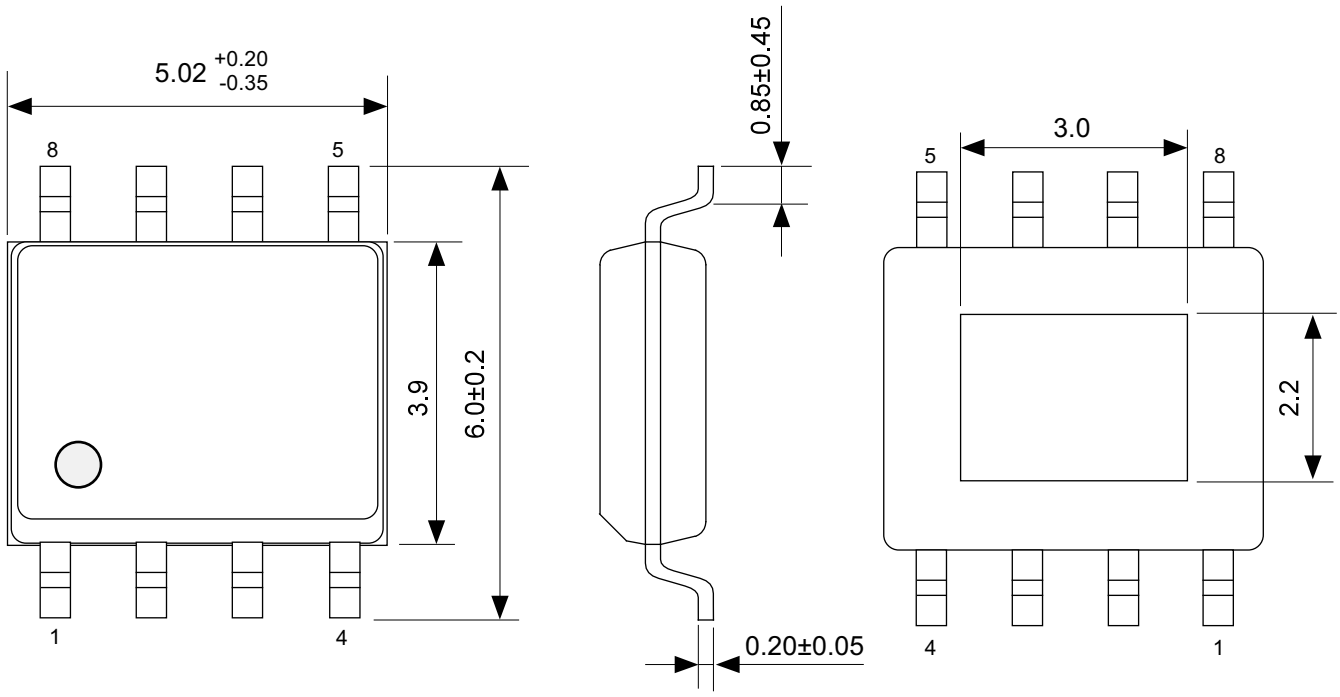

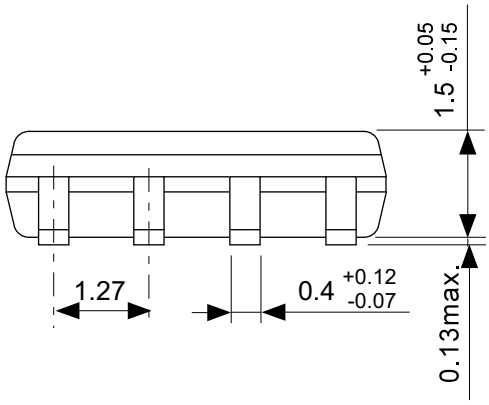

No. FH008-Z-P-SD-2.0

TITLE	HSOP8A-Z-PKG Dimensions
No.	FH008-Z-P-SD-2.0
ANGLE	
UNIT	mm

ABLIC Inc.

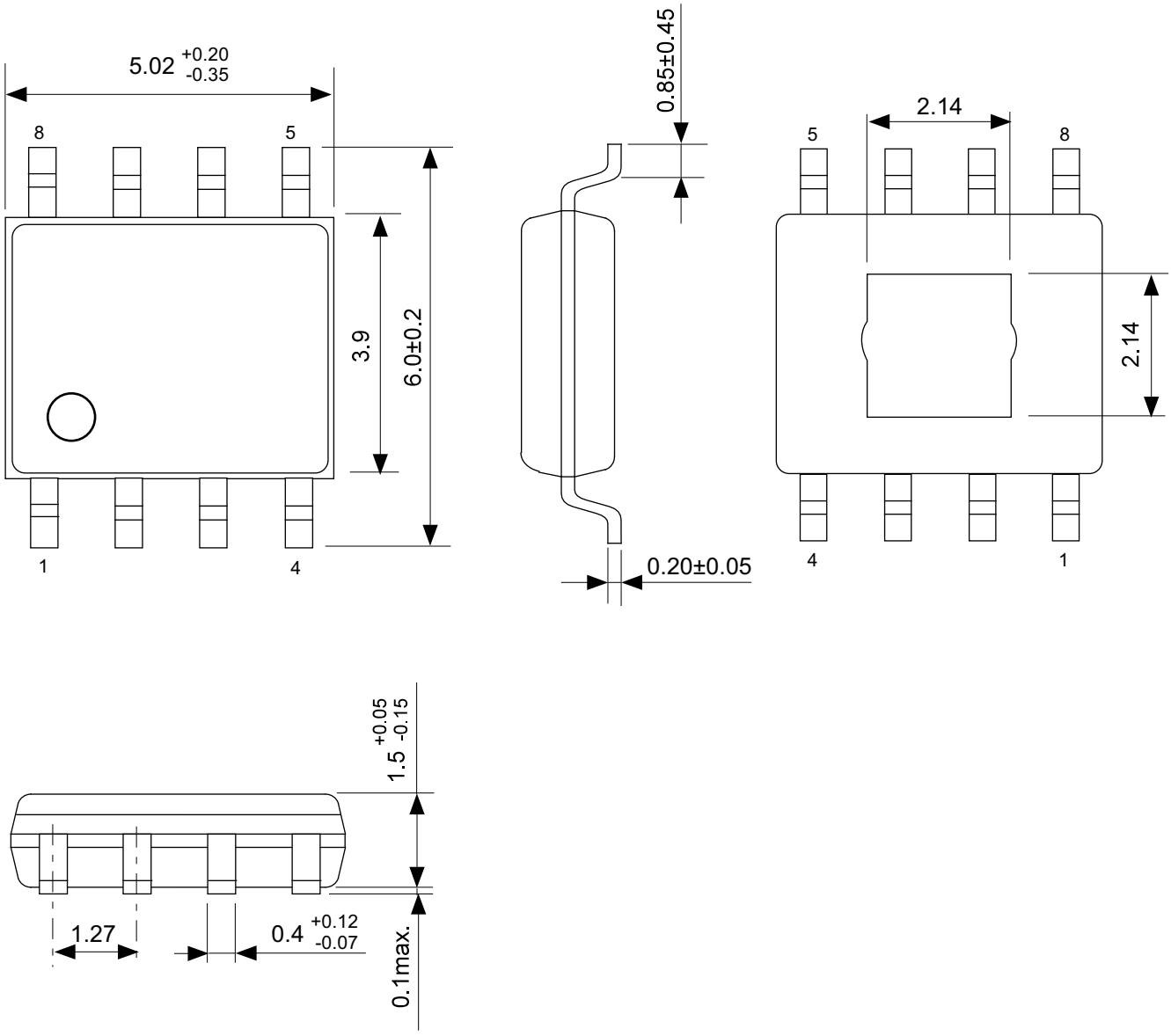

No. FH008-Z-P-S1-2.0

TITLE	HSOP8A-Z-PKG Dimensions
No.	FH008-Z-P-S1-2.0
ANGLE	
UNIT	mm

ABLIC Inc.

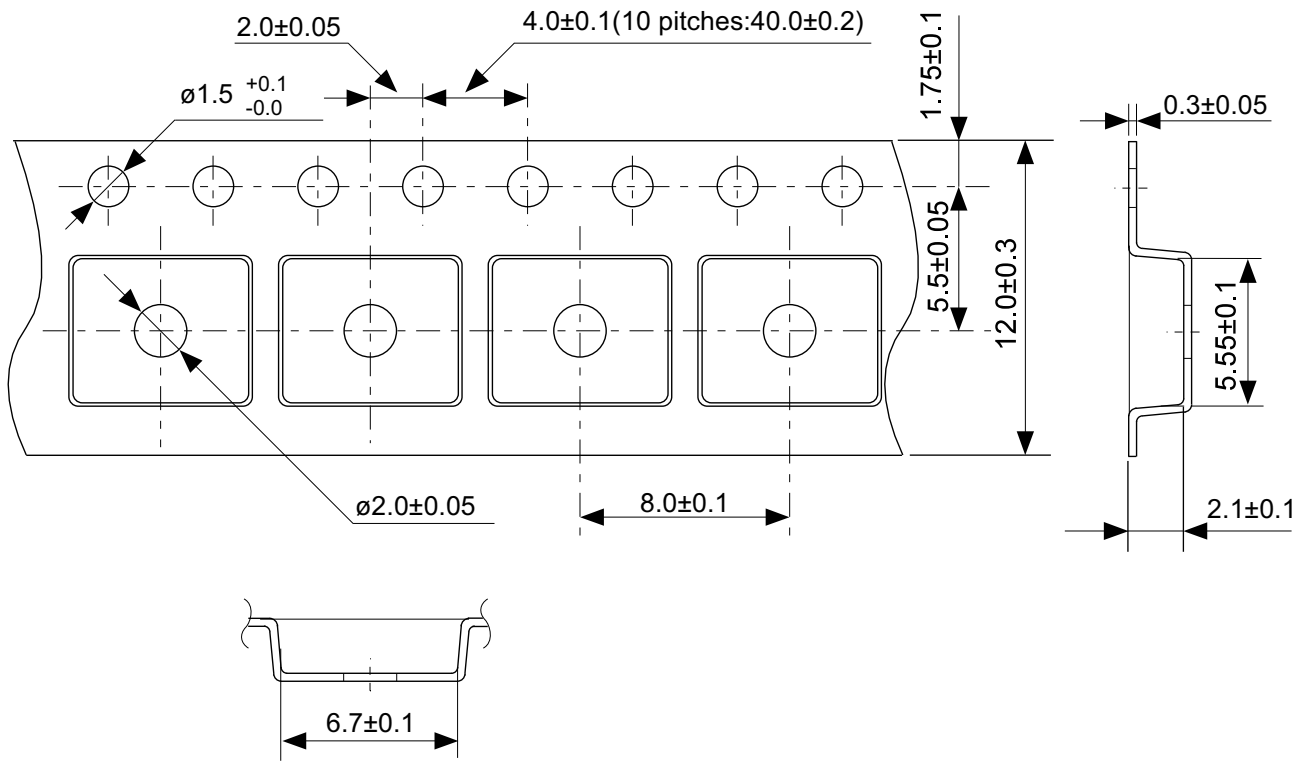

No. FH008-Z-C-SD-1.0

TITLE	HSOP8A-Z-Carrier Tape
No.	FH008-Z-C-SD-1.0
ANGLE	
UNIT	mm
ABLIC Inc.	

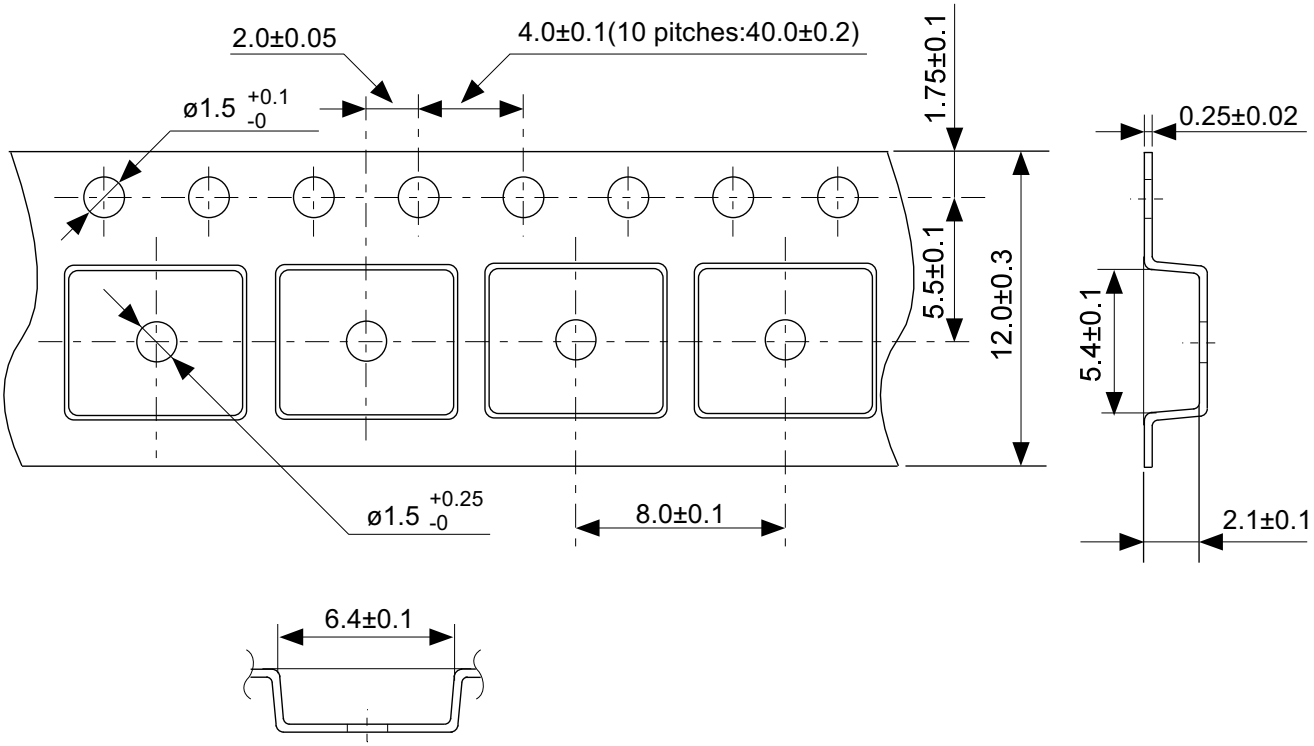

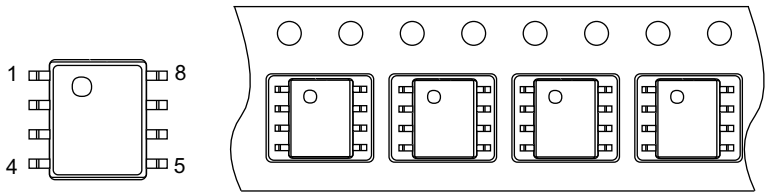

Feed direction

No. FH008-Z-C-S1-1.0

TITLE	HSOP8A-Z-Carrier Tape
No.	FH008-Z-C-S1-1.0
ANGLE	
UNIT	mm
ABLIC Inc.	

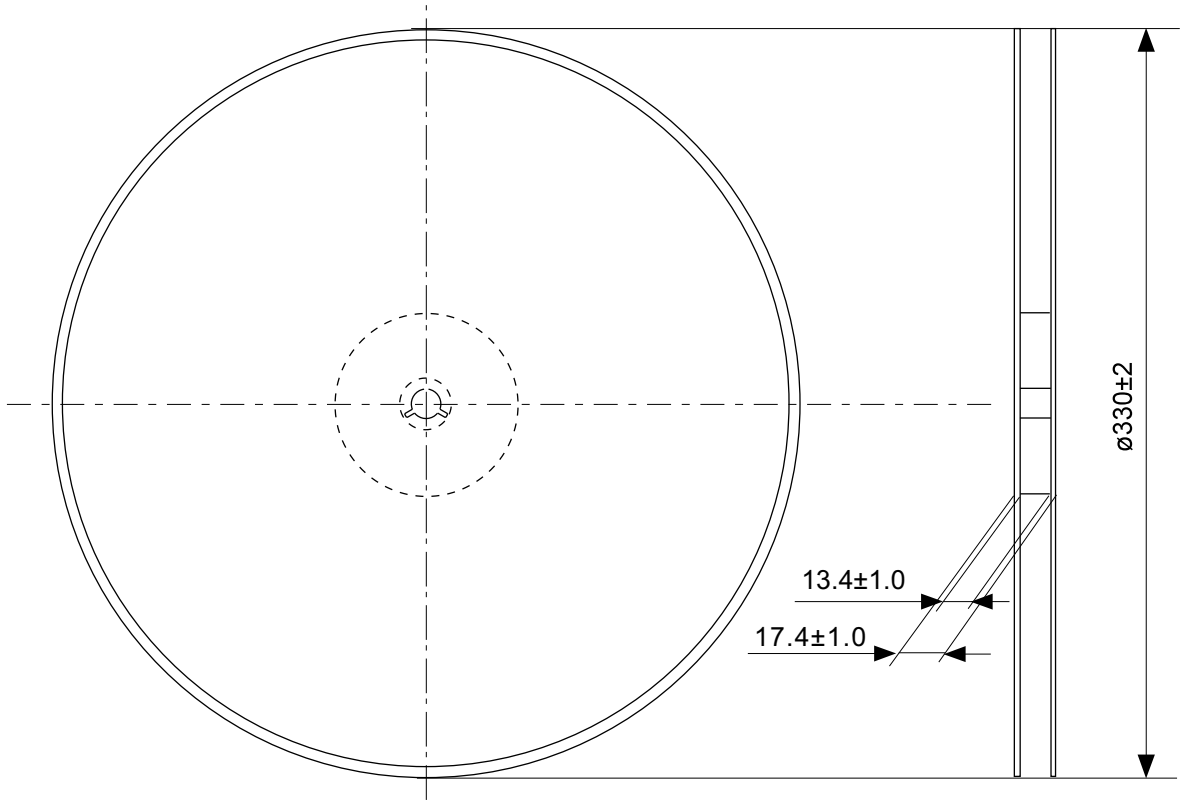

Enlarged drawing in the central part

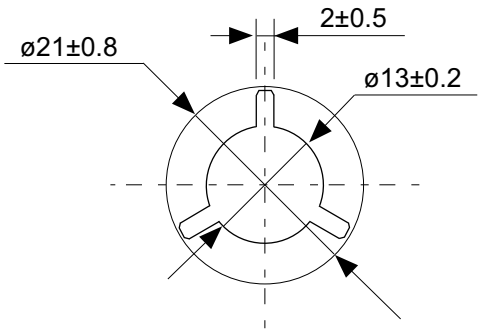

No. FH008-Z-R-SD-1.1

TITLE	HSOP8A-Z-Reel		
No.	FH008-Z-R-SD-1.1		
ANGLE		QTY.	4,000
UNIT	mm		
ABLIC Inc.			

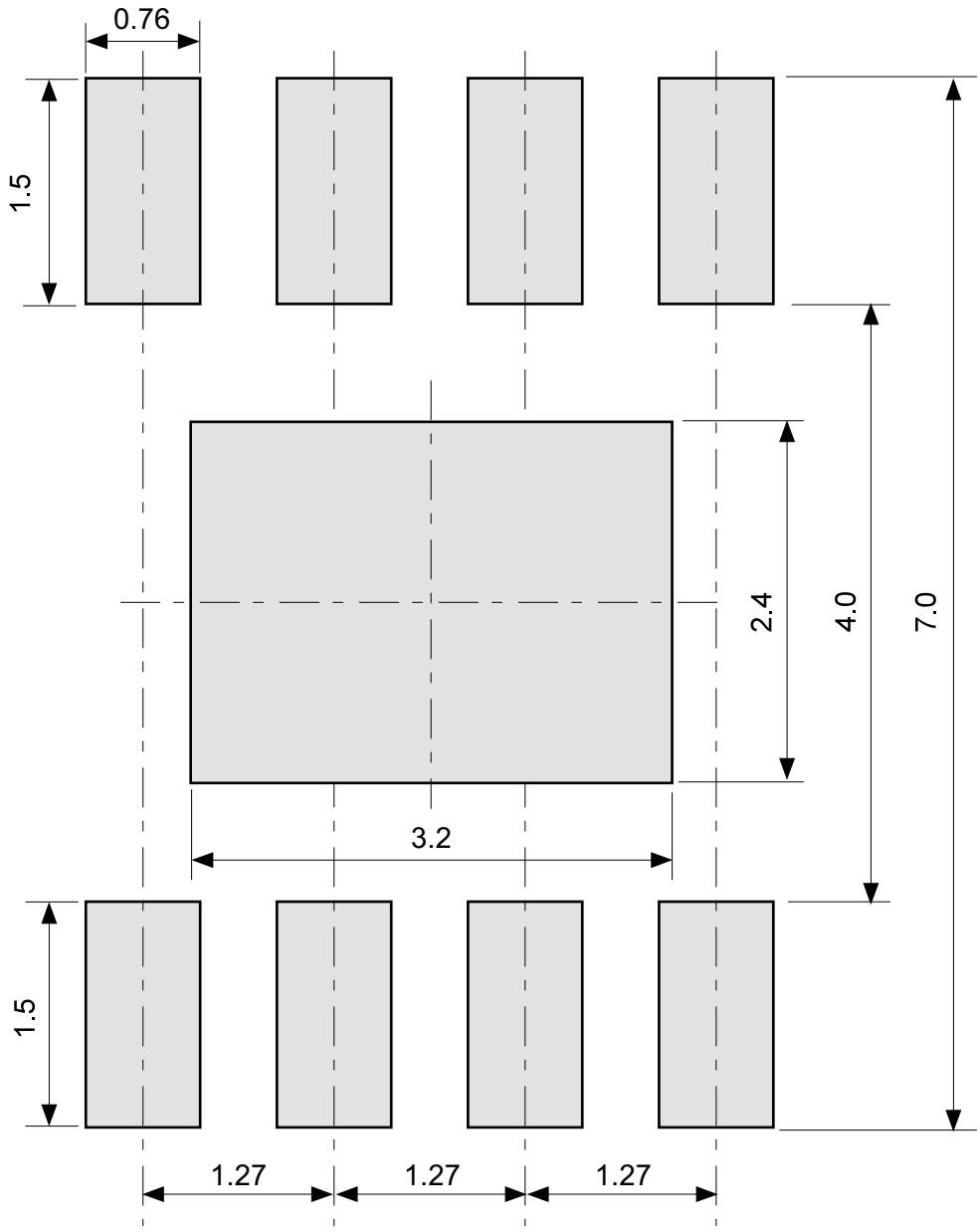

No. FH008-Z-L-SD-1.0

TITLE	HSOP8A-Z -Land Recommendation
No.	FH008-Z-L-SD-1.0
ANGLE	
UNIT	mm
ABLIC Inc.	

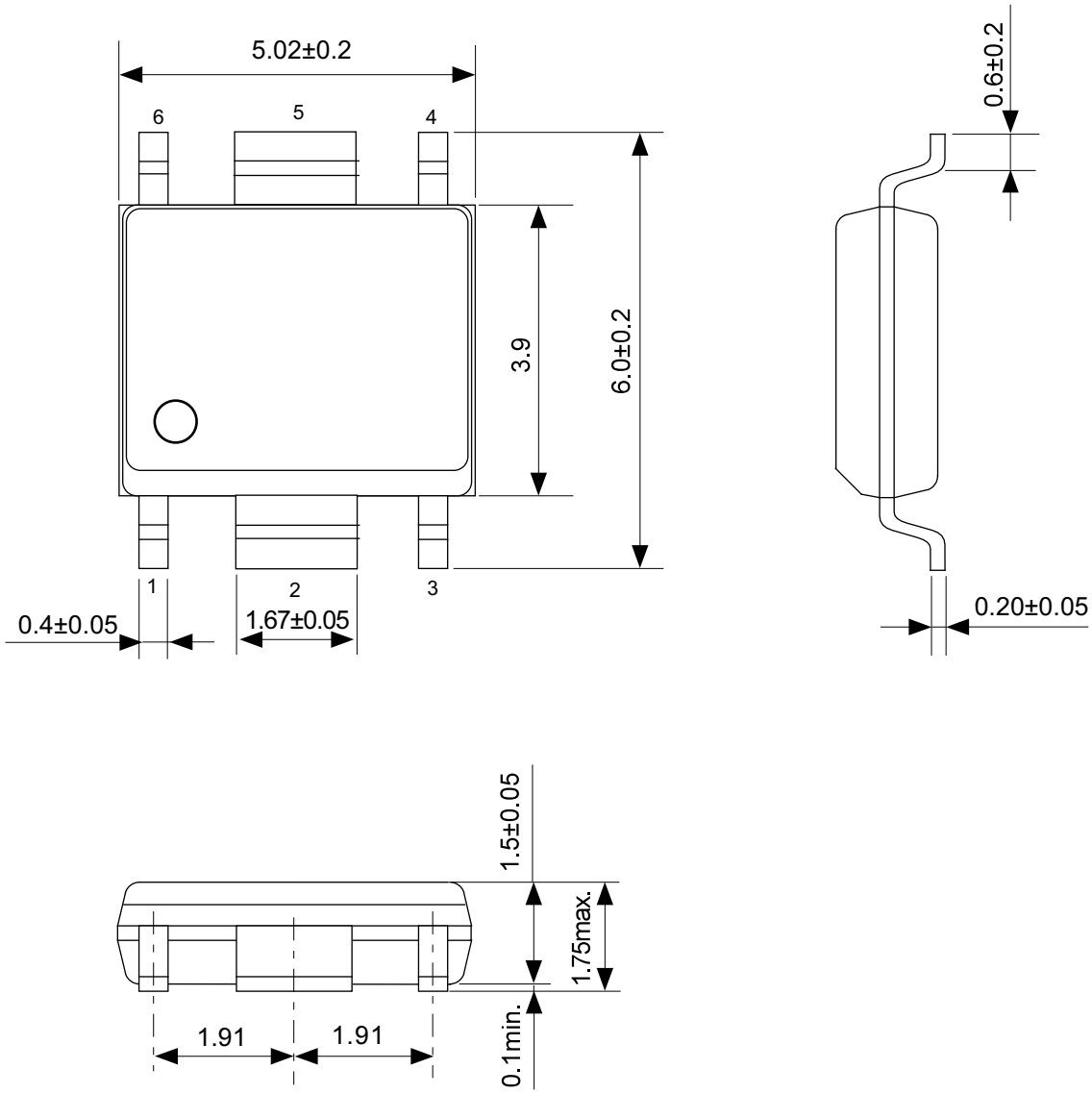

No. FH006-A-P-SD-2.1

TITLE	HSOP6-A-PKG Dimensions
No.	FH006-A-P-SD-2.1
ANGLE	
UNIT	mm
ABLIC Inc.	

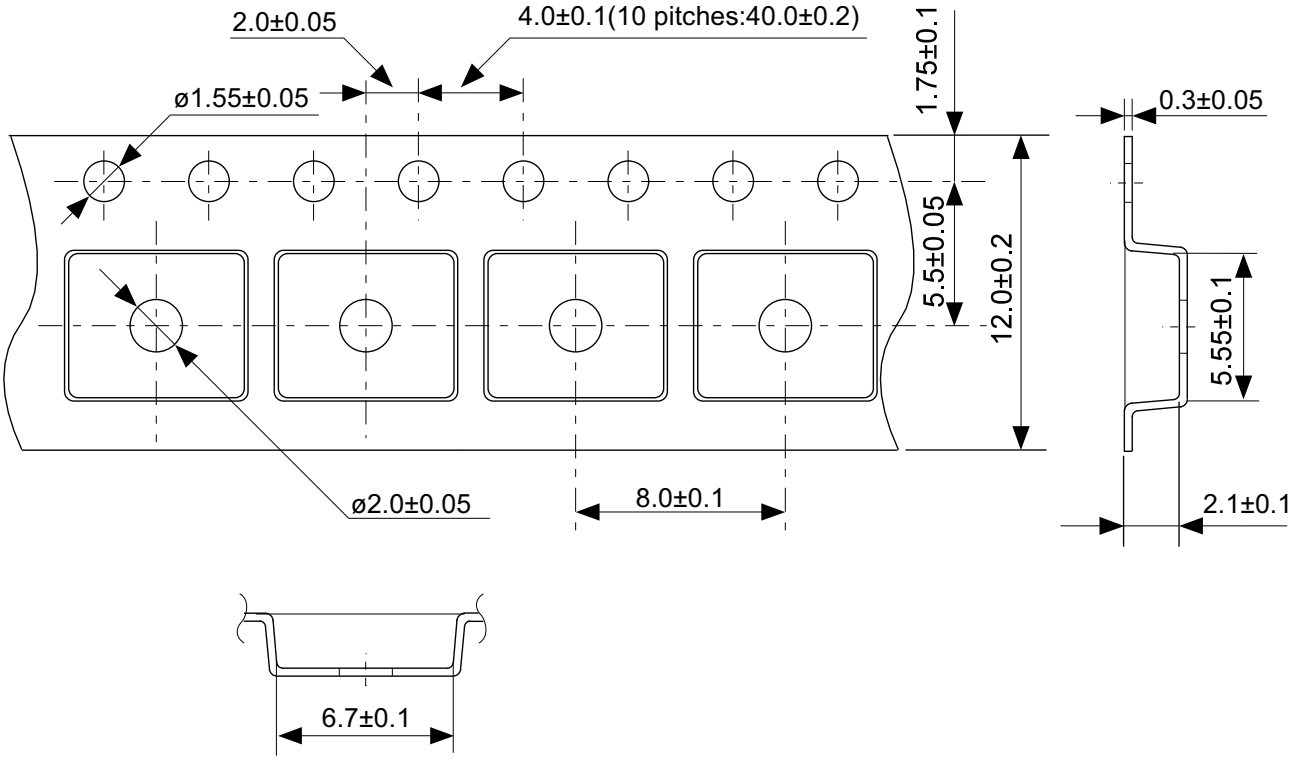

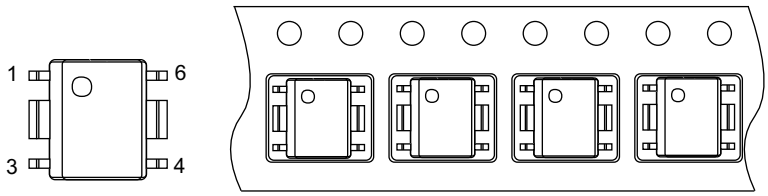

Feed direction

No. FH006-A-C-SD-2.0

TITLE	HSOP6-A-Carrier Tape
No.	FH006-A-C-SD-2.0
ANGLE	
UNIT	mm
ABLIC Inc.	

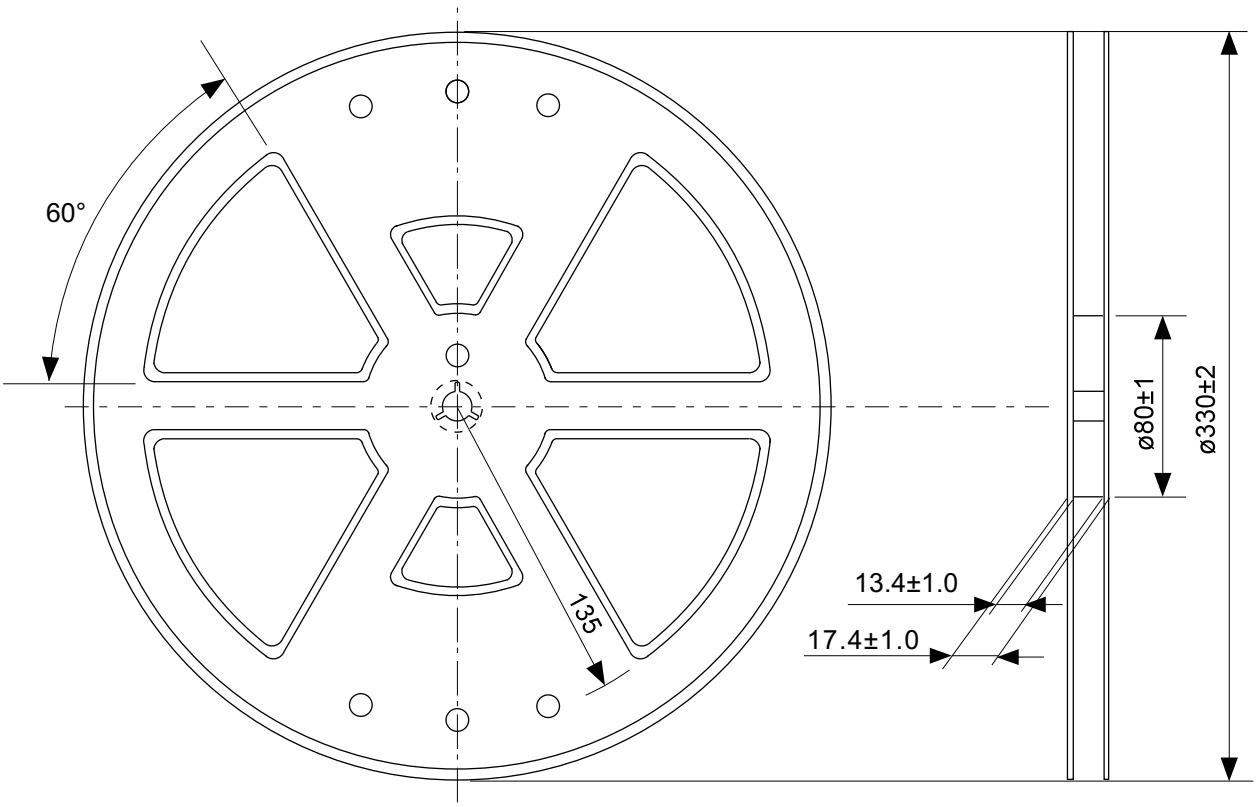

Enlarged drawing in the central part

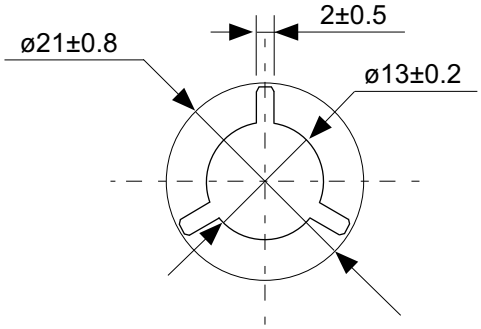

No. FH006-A-R-S1-2.0

TITLE	HSOP6-A-Reel		
No.	FH006-A-R-S1-2.0		
ANGLE		QTY.	4,000
UNIT	mm		
	ABLIC Inc.		

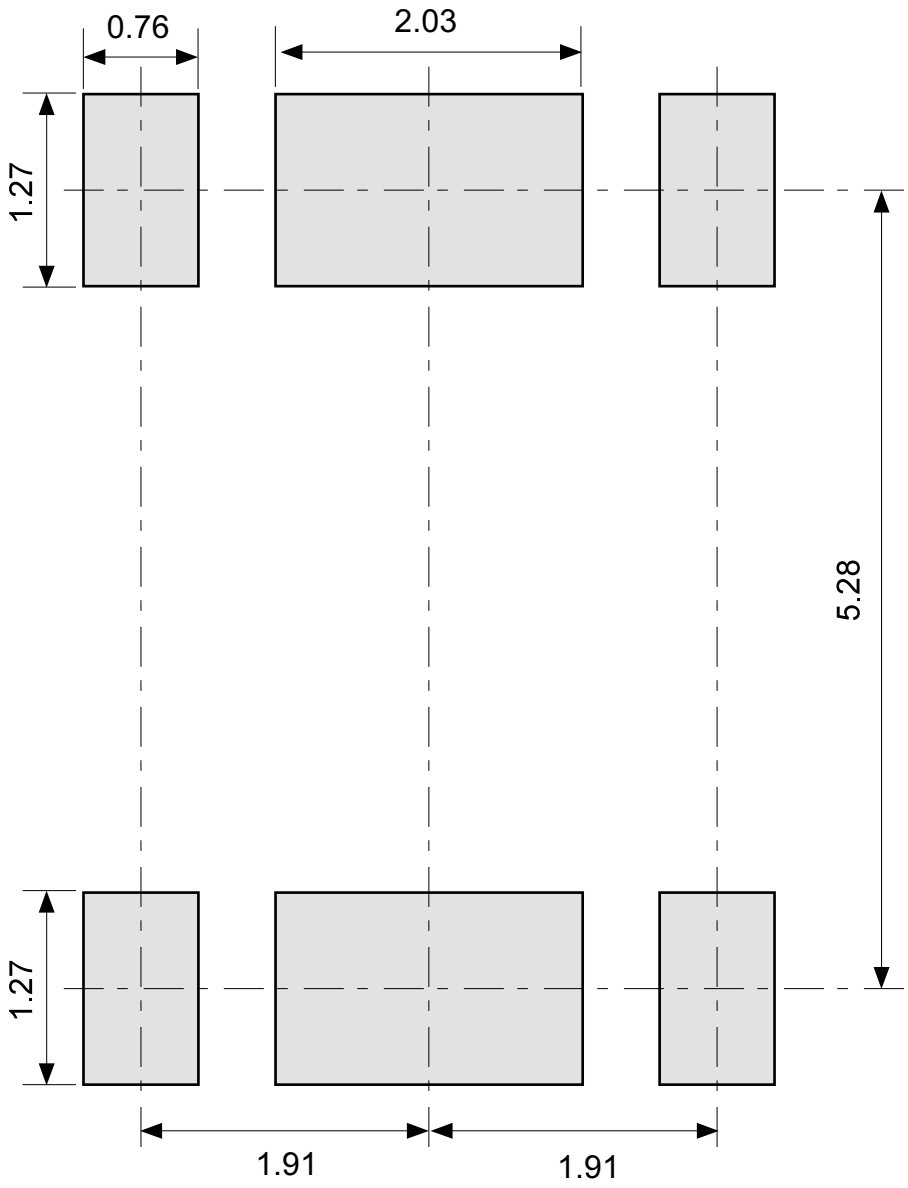

No. FH006-A-L-SD-2.0

TITLE	HSOP6-A -Land Recommendation
No.	FH006-A-L-SD-2.0
ANGLE	
UNIT	mm
ABLIC Inc.	

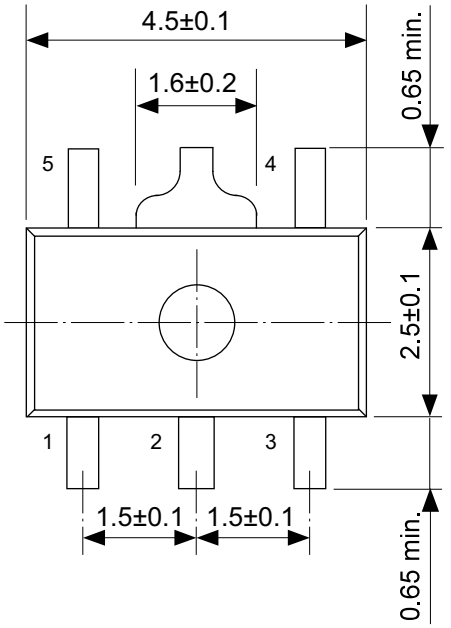

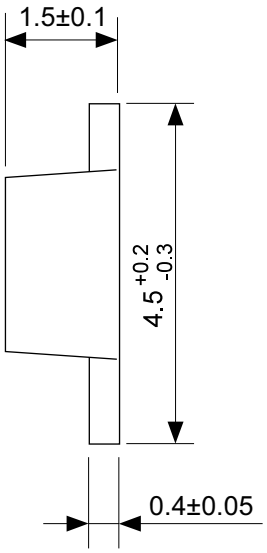

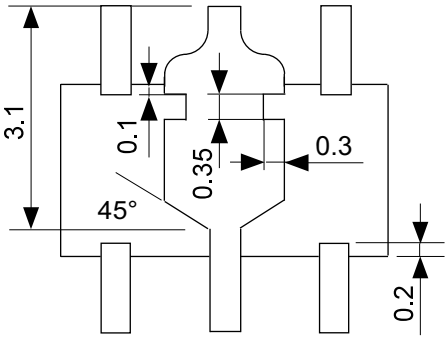

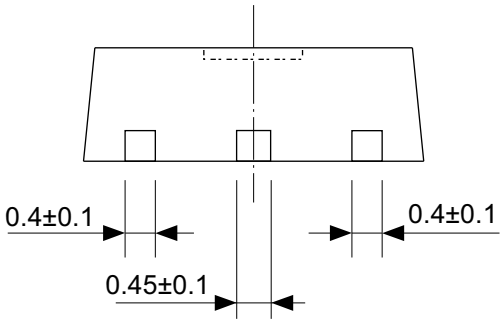

No. UP005-A-P-SD-2.0

TITLE	SOT895-A-PKG Dimensions
No.	UP005-A-P-SD-2.0
ANGLE	
UNIT	mm

ABLIC Inc.

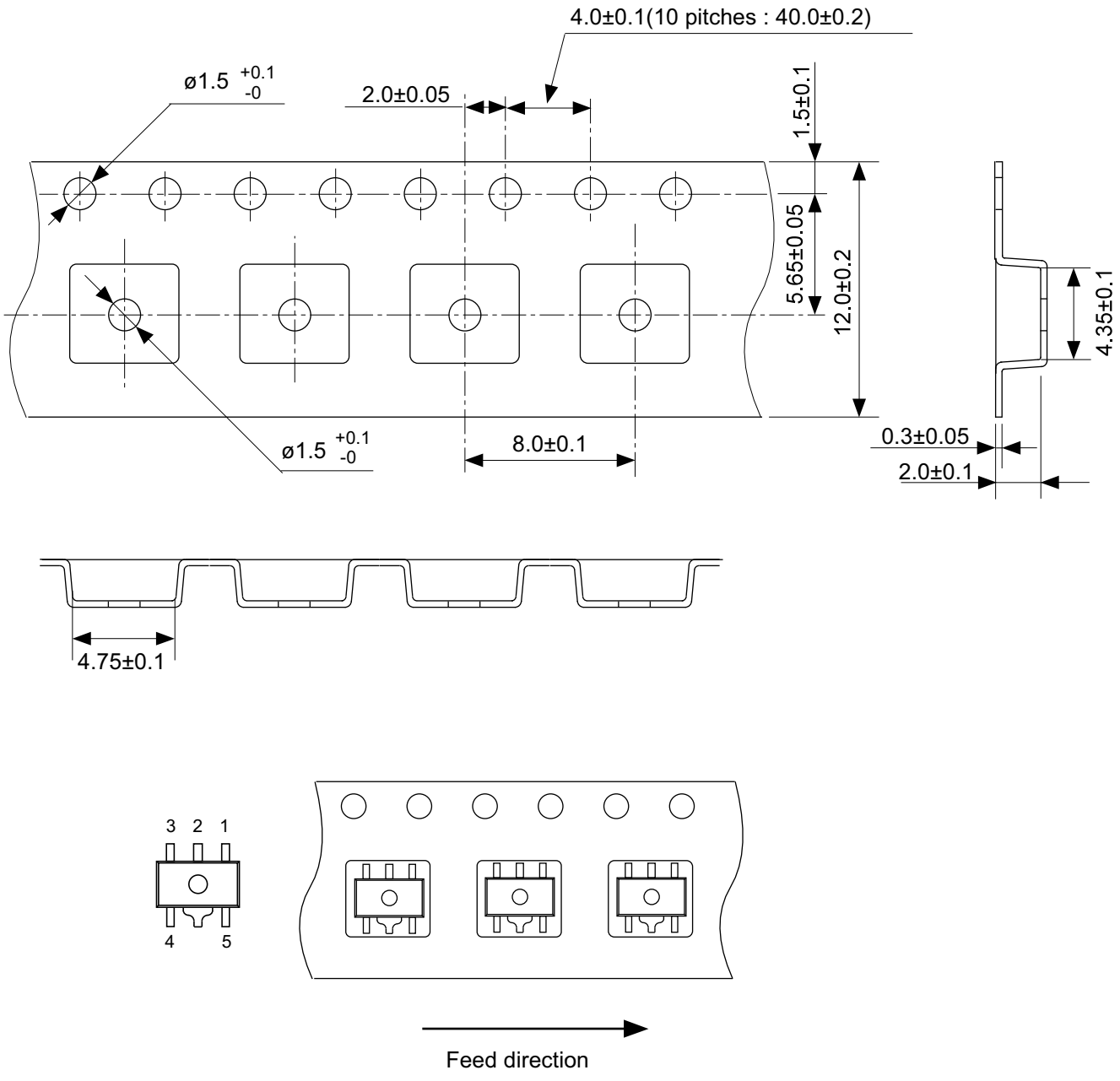

No. UP005-A-C-SD-2.0

TITLE	SOT895-A-Carrier Tape
No.	UP005-A-C-SD-2.0
ANGLE	
UNIT	mm
ABLIC Inc.	

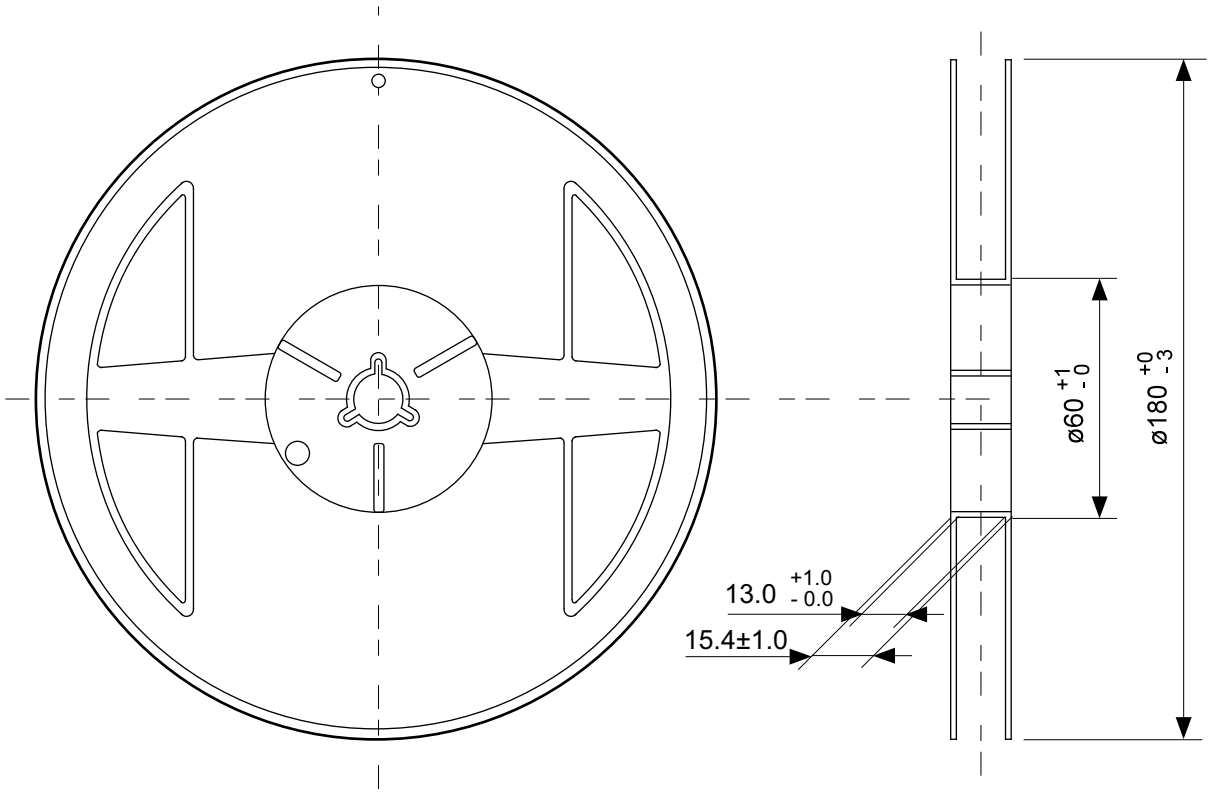

Enlarged drawing in the central part

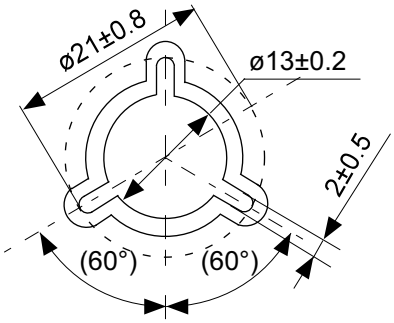

No. UP005-A-R-SD-2.0

TITLE	SOT895-A-Reel		
No.	UP005-A-R-SD-2.0		
ANGLE		QTY.	1,000
UNIT	mm		
ABLIC Inc.			

Disclaimers (Handling Precautions)

1. All the information described herein (product data, specifications, figures, tables, programs, algorithms and application circuit examples, etc.) is current as of publishing date of this document and is subject to change without notice.
2. The circuit examples and the usages described herein are for reference only, and do not guarantee the success of any specific mass-production design.
   ABLIC Inc. is not liable for any losses, damages, claims or demands caused by the reasons other than the products described herein (hereinafter "the products") or infringement of third-party intellectual property right and any other right due to the use of the information described herein.
3. ABLIC Inc. is not liable for any losses, damages, claims or demands caused by the incorrect information described herein.
4. Be careful to use the products within their ranges described herein. Pay special attention for use to the absolute maximum ratings, operation voltage range and electrical characteristics, etc.
   ABLIC Inc. is not liable for any losses, damages, claims or demands caused by failures and / or accidents, etc. due to the use of the products outside their specified ranges.
5. Before using the products, confirm their applications, and the laws and regulations of the region or country where they are used and verify suitability, safety and other factors for the intended use.
6. When exporting the products, comply with the Foreign Exchange and Foreign Trade Act and all other export-related laws, and follow the required procedures.
7. The products are strictly prohibited from using, providing or exporting for the purposes of the development of weapons of mass destruction or military use. ABLIC Inc. is not liable for any losses, damages, claims or demands caused by any provision or export to the person or entity who intends to develop, manufacture, use or store nuclear, biological or chemical weapons or missiles, or use any other military purposes.
8. The products are not designed to be used as part of any device or equipment that may affect the human body, human life, or assets (such as medical equipment, disaster prevention systems, security systems, combustion control systems, infrastructure control systems, vehicle equipment, traffic systems, in-vehicle equipment, aviation equipment, aerospace equipment, and nuclear-related equipment), excluding when specified for in-vehicle use or other uses by ABLIC, Inc. Do not apply the products to the above listed devices and equipments.
   ABLIC Inc. is not liable for any losses, damages, claims or demands caused by unauthorized or unspecified use of the products.
9. In general, semiconductor products may fail or malfunction with some probability. The user of the products should therefore take responsibility to give thorough consideration to safety design including redundancy, fire spread prevention measures, and malfunction prevention to prevent accidents causing injury or death, fires and social damage, etc. that may ensue from the products' failure or malfunction.
   The entire system in which the products are used must be sufficiently evaluated and judged whether the products are allowed to apply for the system on customer's own responsibility.
10. The products are not designed to be radiation-proof. The necessary radiation measures should be taken in the product design by the customer depending on the intended use.
11. The products do not affect human health under normal use. However, they contain chemical substances and heavy metals and should therefore not be put in the mouth. The fracture surfaces of wafers and chips may be sharp. Be careful when handling these with the bare hands to prevent injuries, etc.
12. When disposing of the products, comply with the laws and ordinances of the country or region where they are used.
13. The information described herein contains copyright information and know-how of ABLIC Inc. The information described herein does not convey any license under any intellectual property rights or any other rights belonging to ABLIC Inc. or a third party. Reproduction or copying of the information from this document or any part of this document described herein for the purpose of disclosing it to a third-party is strictly prohibited without the express permission of ABLIC Inc.
14. For more details on the information described herein or any other questions, please contact ABLIC Inc.'s sales representative.
15. This Disclaimers have been delivered in a text using the Japanese language, which text, despite any translations into the English language and the Chinese language, shall be controlling.

2.4-2019.07

ENTEGRECİ

Bu belge www.entegreci.com üzerinden sunulmaktadır.

Elektronik komponent tedarikinde Entegreci

Entegreci, Eskişehir merkezli, Türkiye geneline satış yapan bir elektronik komponent mağazasıdır. Entegreler (IC), mikrodenetleyiciler, transistörler, diyotlar, pasif elemanlar, konnektörler, modüller ve geliştirme kartları tek adetten seri üretim adetlerine kadar satılır. Ürün sayfalarında güncel stok durumunu, fiyatı ve datasheet bağlantısını bulabilirsiniz.

Parça koduyla arama

Üretici parça numarasını yazın; stok ve fiyatı hemen görün.

www.entegreci.com

Ürün kategorileri

Entegreden kapasitöre tüm elektronik komponent kategorileri.

Kategorilere göz atın

Üreticiler

Aradığınız üreticinin ürünlerini tek sayfada inceleyin.

Üreticileri görün

Toplu alım ve teklif

Listede olmayan ya da yüksek adetli parçalar için teklif isteyin.

Teklif isteyin

www.entegreci.com | **destek@entegreci.com** | **0850 305 90 34**

Entegreci is an online electronic components store based in Türkiye. Search by manufacturer part number to see stock, prices and datasheets for integrated circuits, microcontrollers, transistors, passive components and connectors, or request a quote for parts that are not listed.

Bu sayfa Entegreci tarafından eklenmiştir. Belgenin önceki sayfaları asıl yayıncısına aittir ve içeriği değiştirilmemiştir; en güncel sürüm için belgenin yayıncısına başvurun.