S-1711 Series

www.ablic.com

6.5 V INPUT, 150 mA, 2-CIRCUIT VOLTAGE REGULATOR

© ABLIC Inc., 2004-2019

Rev.3.2_00

The S-1711 Series is a 2-channel positive voltage regulator with a low dropout voltage, high-accuracy output voltage, and low current consumption (150 mA output current) developed based on CMOS technology.
A 1.0 µF small ceramic capacitor can be used, and a 2-circuit voltage regulator with ±1.0% high-accuracy output voltage is incorporated in SOT-23-6 or super-small SNT-6A package. A/ B/ E/ F type is provided with a discharge shunt function allowing high-speed output response when the ON/OFF pin is used.
Compared with the conventional 150 mA output current 2-channel CMOS voltage regulators, high-density mounting is realized by using super-small SNT-6A package and a small ceramic capacitor. Also, the low current consumption makes the S-1711 Series ideal for mobile devices.

NOT RECOMMENDED FOR NEW DESIGN

■ Features

- Output voltage: 1.5 V to 5.5 V, selectable in 0.1 V step
- Input voltage: 2.0 V to 6.5 V
- Output voltage accuracy: ±1.0%
- Dropout voltage: 200 mV typ. (3.0 V output product, I_{OUT} = 150 mA)
- Current consumption: During operation: 70 µA typ., 90 µA max. (Per circuit)
  During power-off: 0.1 µA typ., 1.0 µA max.
- Output current: Possible to output 150 mA ($V_{IN} \geq V_{OUT(S)}$ + 1.0 V)*1 (Per circuit)
- Input and output capacitors: A ceramic capacitor of 1.0 µF or more can be used.
- Ripple rejection: 70 dB typ. (f = 1.0 kHz)
- Built-in overcurrent protection circuit: Limits overcurrent of output transistor.
- Built-in ON/OFF circuit: Ensures long battery life.
  Discharge shunt function "available" / "unavailable" is selectable.
  Pull-down function "available" / "unavailable" is selectable.
- Operation temperature range: Ta = –40°C to +85°C
- Lead-free, Sn 100%, halogen-free*2

***1.** Attention should be paid to the power dissipation of the package when the output current is large.
***2.** Refer to "■ **Product Name Structure**" for details.

■ Applications

- Constant-voltage power supply for cellular phone
- Constant-voltage power supply for battery-powered device
- Constant-voltage power supply for home electric appliance

■ Packages

- SNT-6A
- SOT-23-6

■ Block Diagrams

1. S-1711 Series A type

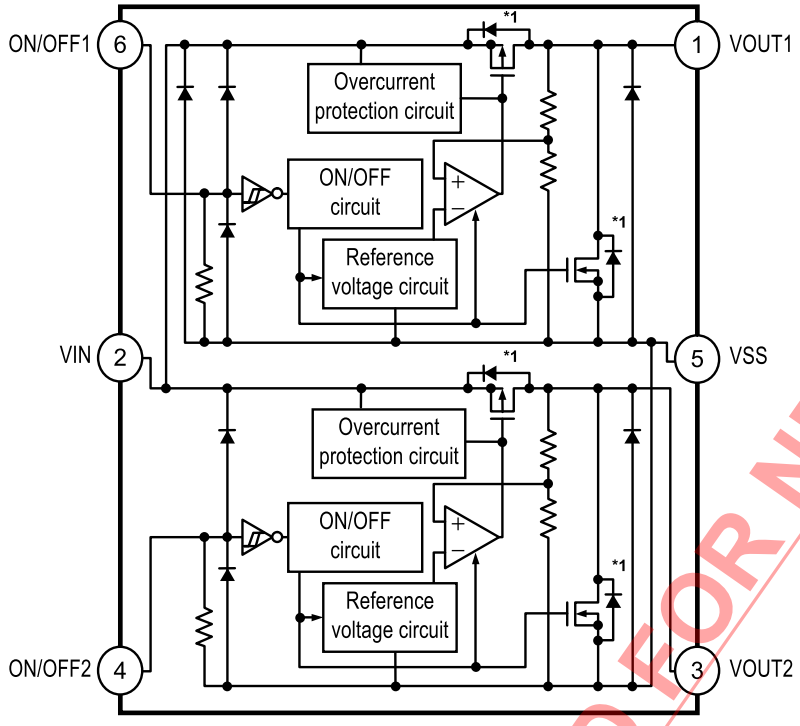

Function	Status
ON/OFF logic	Active "H"
Discharge shunt function	Available
Pull-up resistor	None
Pull-down resistor	Available

*1. Parasitic diode

Figure 1

2. S-1711 Series B type

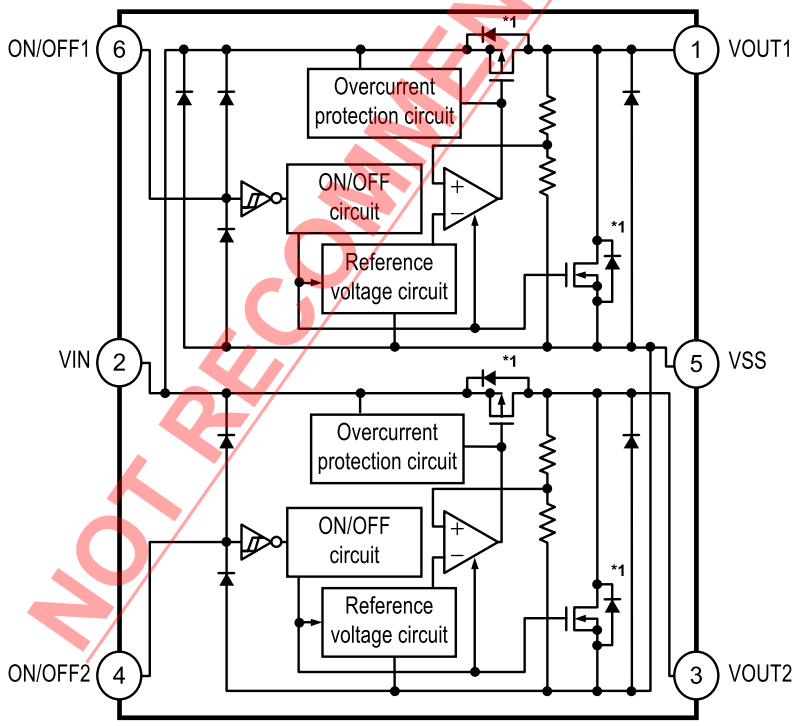

Function	Status
ON/OFF logic	Active "H"
Discharge shunt function	Available
Pull-up resistor	None
Pull-down resistor	None

*1. Parasitic diode

Figure 2

NOT RECOMMENDED FOR NEW DESIGN

3. S-1711 Series C type

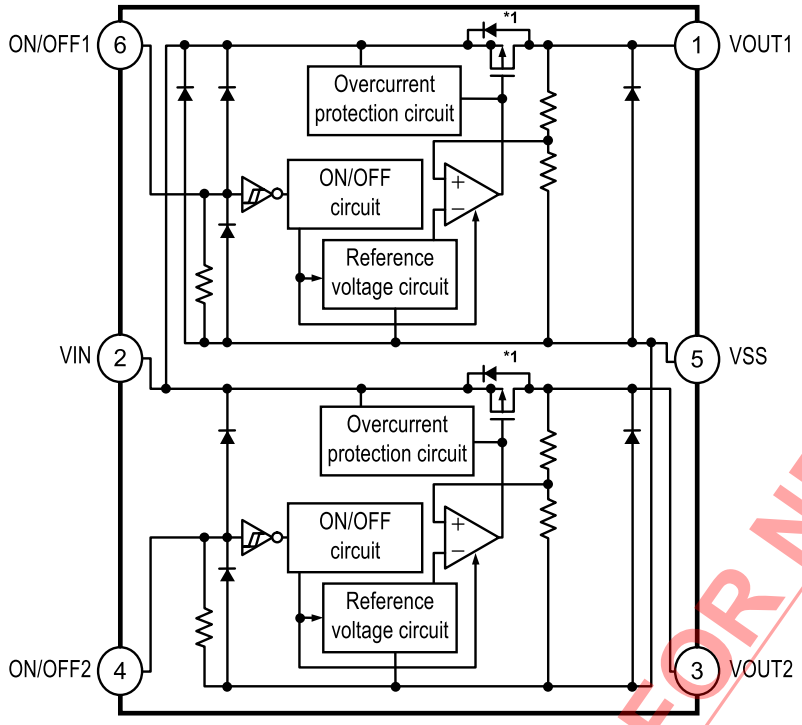

Function	Status
ON/OFF logic	Active "H"
Discharge shunt function	None
Pull-up resistor	None
Pull-down resistor	Available

*1. Parasitic diode

Figure 3

4. S-1711 Series D type

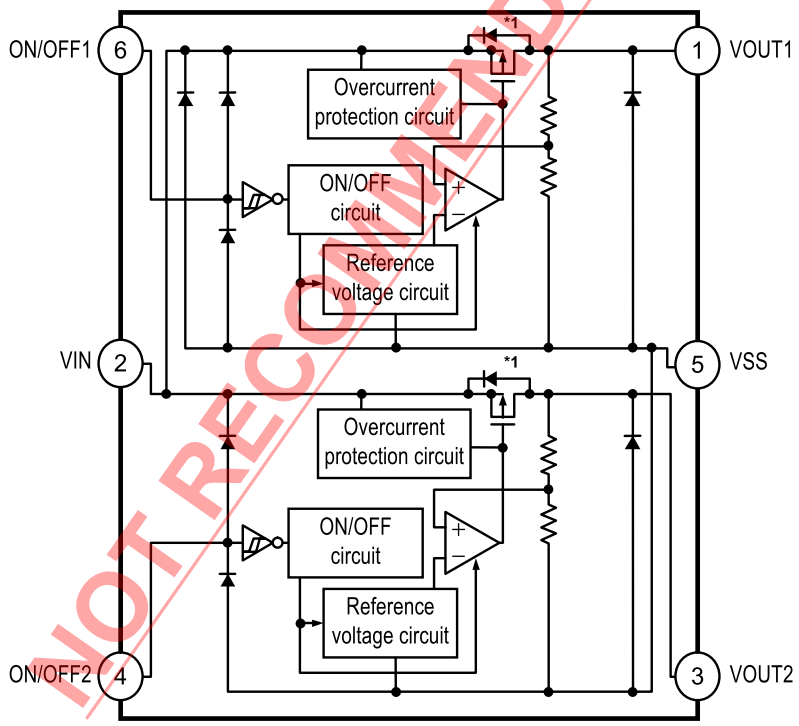

Function	Status
ON/OFF logic	Active "H"
Discharge shunt function	None
Pull-up resistor	None
Pull-down resistor	None

*1. Parasitic diode

Figure 4

NOT RECOMMENDED FOR NEW DESIGN

5. S-1711 Series E type

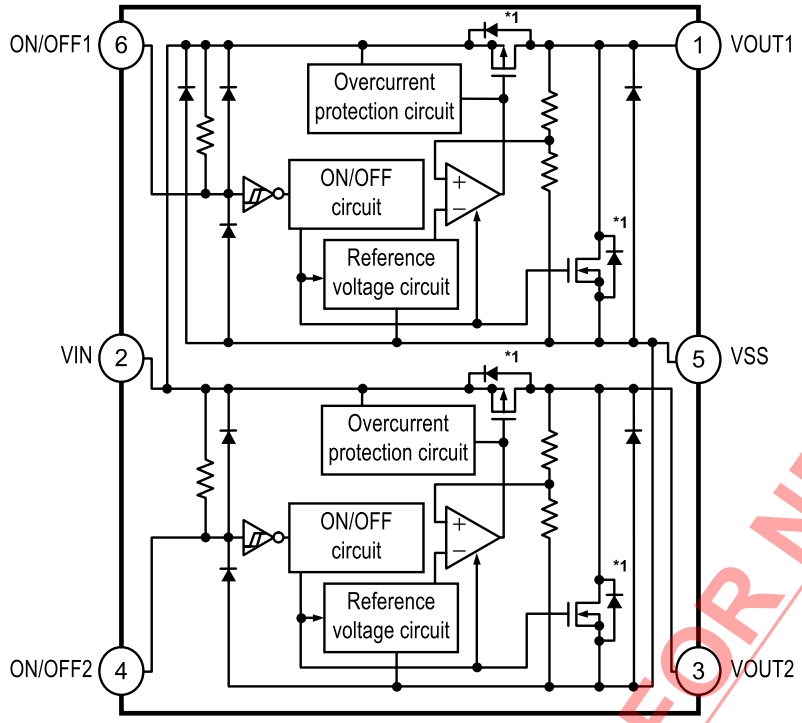

Function	Status
ON/OFF logic	Active "L"
Discharge shunt function	Available
Pull-up resistor	Available
Pull-down resistor	None

*1. Parasitic diode

Figure 5

6. S-1711 Series F type

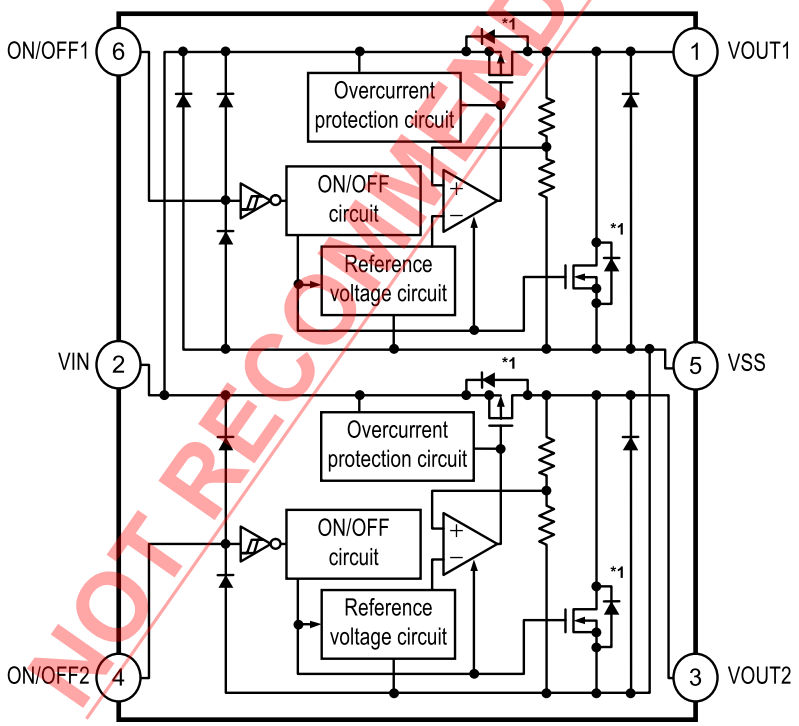

Function	Status
ON/OFF logic	Active "L"
Discharge shunt function	Available
Pull-up resistor	None
Pull-down resistor	None

*1. Parasitic diode

Figure 6

NOT RECOMMENDED FOR NEW DESIGN

7. S-1711 Series G type

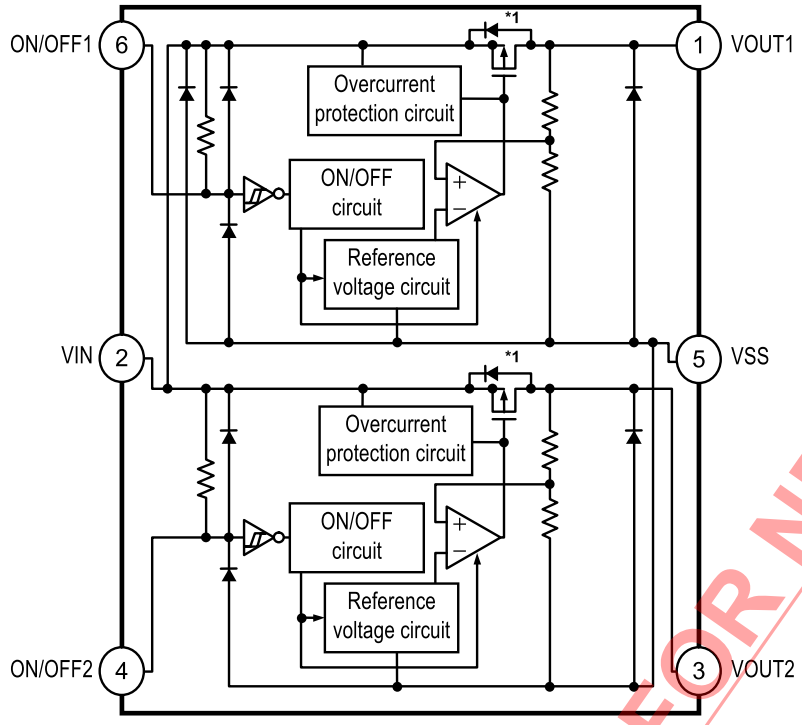

Function	Status
ON/OFF logic	Active "L"
Discharge shunt function	None
Pull-up resistor	Available
Pull-down resistor	None

*1. Parasitic diode

Figure 7

8. S-1711 Series H type

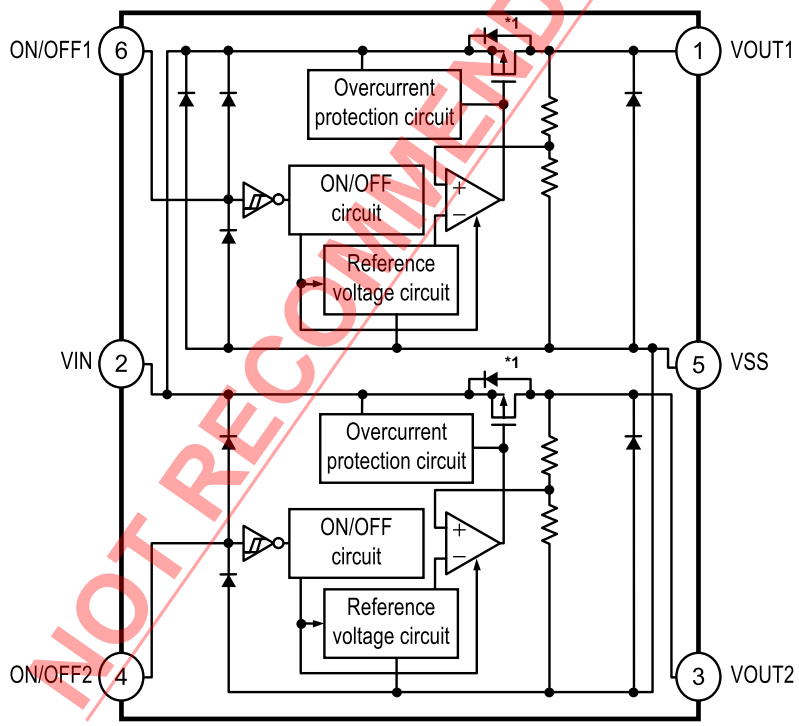

Function	Status
ON/OFF logic	Active "L"
Discharge shunt function	None
Pull-up resistor	None
Pull-down resistor	None

*1. Parasitic diode

Figure 8

NOT RECOMMENDED FOR NEW DESIGN

■ Product Name Structure

Users can select the product type, output voltage, and package type for the S-1711 Series. Refer to "**1. Product name**" regarding the contents of product name, "**2. Function list of product type**" regarding the product type, "**3. Packages**" regarding the package drawings, "**4. Product name list**" regarding details of the product name.

1. Product name

1. 1 SNT-6A

S-1711 x xx xx - I6T1 U

- U: Environmental code
  - U: Lead-free (Sn 100%), halogen-free
- I6T1: Package abbreviation and IC packing specifications*1
  - I6T1: SNT-6A, Tape
- xx: Output voltage of voltage regulator 2
  - 15 to 55
  - (e.g., when the output voltage is 1.5 V, it is expressed as 15.)
- xx: Output voltage of voltage regulator 1
  - 15 to 55
  - (e.g., when the output voltage is 1.5 V, it is expressed as 15.)
- x: Product type*2
  - A to H

***1.** Refer to the tape drawing.
***2.** Refer to "**2. Function list of product type**".

1. 2 SOT-23-6

S-1711 x xx xx - M6T1 x

- x: Environmental code
  - U: Lead-free (Sn 100%), halogen-free
  - G: Lead-free (for details, please contact our sales representatives.)
- M6T1: Package abbreviation and IC packing specifications*1
  - M6T1: SOT-23-6, Tape
- xx: Output voltage of voltage regulator 2
  - 15 to 55
  - (e.g., when the output voltage is 1.5 V, it is expressed as 15.)
- xx: Output voltage of voltage regulator 1
  - 15 to 55
  - (e.g., when the output voltage is 1.5 V, it is expressed as 15.)
- x: Product type*2
  - A to H

***1.** Refer to the tape drawing.
***2.** Refer to "**2. Function list of product type**".

NOT RECOMMENDED FOR NEW DESIGN

2. Function list of product type

Table 1

Product Type	ON/OFF Logic	Discharge Shunt Function	Pull-up Resistor	Pull-down Resistor
A	Active “H”	Available	None	Available
B	Active “H”	Available	None	None
C	Active “H”	None	None	Available
D	Active “H”	None	None	None
E	Active “L”	Available	Available	None
F	Active “L”	Available	None	None
G	Active “L”	None	Available	None
H	Active “L”	None	None	None

3. Packages

Package Name	Drawing Code			
	Package	Tape	Reel	Land
SNT-6A	PG006-A-P-SD	PG006-A-C-SD	PG006-A-R-SD	PG006-A-L-SD
SOT-23-6	MP006-A-P-SD	MP006-A-C-SD	MP006-A-R-SD	—

NOT RECOMMENDED FOR NEW DESIGN

4. Product name list

4. 1 S-1711 Series A type

ON/OFF logic: Active "H"
Discharge Shunt Function: Available
Pull-up Resistor: None
Pull-down Resistor: Available

Table 2 (1 / 2)

Voltage Regulator 1 Output Voltage	Voltage Regulator 2 Output Voltage	SNT-6A	SOT-23-6
1.5 V ±1.0%	1.5 V ±1.0%	S-1711A1515-I6T1U	S-1711A1515-M6T1x
1.5 V ±1.0%	1.8 V ±1.0%	S-1711A1518-I6T1U	—
1.5 V ±1.0%	2.6 V ±1.0%	S-1711A1526-I6T1U	—
1.5 V ±1.0%	2.8 V ±1.0%	S-1711A1528-I6T1U	S-1711A1528-M6T1x
1.5 V ±1.0%	2.85 V ±1.0%	S-1711A152J-I6T1U	—
1.5 V ±1.0%	2.9 V ±1.0%	—	S-1711A1529-M6T1x
1.5 V ±1.0%	3.3 V ±1.0%	S-1711A1533-I6T1U	S-1711A1533-M6T1x
1.8 V ±1.0%	1.5 V ±1.0%	S-1711A1815-I6T1U	S-1711A1815-M6T1x
1.8 V ±1.0%	1.8 V ±1.0%	S-1711A1818-I6T1U	S-1711A1818-M6T1x
1.8 V ±1.0%	2.5 V ±1.0%	—	S-1711A1825-M6T1x
1.8 V ±1.0%	2.7 V ±1.0%	S-1711A1827-I6T1U	S-1711A1827-M6T1x
1.8 V ±1.0%	2.75 V ±1.0%	S-1711A182H-I6T1U	S-1711A182H-M6T1x
1.8 V ±1.0%	2.7 V ±1.0%	S-1711A1828-I6T1U	S-1711A1828-M6T1x
1.8 V ±1.0%	2.85 V ±1.0%	S-1711A182J-I6T1U	S-1711A182J-M6T1x
1.8 V ±1.0%	2.9 V ±1.0%	S-1711A1829-I6T1U	S-1711A1829-M6T1x
1.8 V ±1.0%	3.0 V ±1.0%	S-1711A1830-I6T1U	S-1711A1830-M6T1x
1.8 V ±1.0%	3.2 V ±1.0%	—	S-1711A1832-M6T1x
1.8 V ±1.0%	3.3 V ±1.0%	S-1711A1833-I6T1U	S-1711A1833-M6T1x
1.85 V ±1.0%	2.8 V ±1.0%	S-1711A1J28-I6T1U	S-1711A1J28-M6T1x
2.0 V ±1.0%	4.5 V ±1.0%	—	S-1711A2045-M6T1x
2.3 V ±1.0%	3.2 V ±1.0%	S-1711A2332-I6T1U	—
2.3 V ±1.0%	3.3 V ±1.0%	S-1711A2333-I6T1U	—
2.4 V ±1.0%	2.4 V ±1.0%	S-1711A2424-I6T1U	S-1711A2424-M6T1x
2.4 V ±1.0%	2.5 V ±1.0%	S-1711A2425-I6T1U	S-1711A2425-M6T1x
2.5 V ±1.0%	1.5 V ±1.0%	S-1711A2515-I6T1U	S-1711A2515-M6T1x
2.5 V ±1.0%	1.8 V ±1.0%	S-1711A2518-I6T1U	S-1711A2518-M6T1x
2.5 V ±1.0%	2.2 V ±1.0%	—	S-1711A2522-M6T1x
2.5 V ±1.0%	2.5 V ±1.0%	S-1711A2525-I6T1U	S-1711A2525-M6T1x
2.5 V ±1.0%	2.8 V ±1.0%	S-1711A2528-I6T1U	S-1711A2528-M6T1x
2.5 V ±1.0%	2.9 V ±1.0%	—	S-1711A2529-M6T1x
2.5 V ±1.0%	3.3 V ±1.0%	S-1711A2533-I6T1U	S-1711A2533-M6T1x
2.6 V ±1.0%	1.8 V ±1.0%	—	S-1711A2618-M6T1x
2.6 V ±1.0%	2.6 V ±1.0%	S-1711A2626-I6T1U	—
2.6 V ±1.0%	2.8 V ±1.0%	S-1711A2628-I6T1U	—
2.6 V ±1.0%	2.9 V ±1.0%	S-1711A2629-I6T1U	—
2.6 V ±1.0%	3.0 V ±1.0%	S-1711A2630-I6T1U	—
2.7 V ±1.0%	1.8 V ±1.0%	—	S-1711A2718-M6T1x
2.8 V ±1.0%	1.5 V ±1.0%	S-1711A2815-I6T1U	S-1711A2815-M6T1x
2.8 V ±1.0%	1.8 V ±1.0%	S-1711A2818-I6T1U	S-1711A2818-M6T1x
2.8 V ±1.0%	1.9 V ±1.0%	—	S-1711A2819-M6T1x
2.8 V ±1.0%	2.5 V ±1.0%	—	S-1711A2825-M6T1x

NOT RECOMMENDED FOR NEW DESIGN

Table 2 (2 / 2)

Voltage Regulator 1 Output Voltage	Voltage Regulator 2 Output Voltage	SNT-6A	SOT-23-6
2.8 V ±1.0%	2.8 V ±1.0%	S-1711A2828-I6T1U	S-1711A2828-M6T1x
2.8 V ±1.0%	2.9 V ±1.0%	S-1711A2829-I6T1U	S-1711A2829-M6T1x
2.8 V ±1.0%	3.0 V ±1.0%	S-1711A2830-I6T1U	S-1711A2830-M6T1x
2.8 V ±1.0%	3.1 V ±1.0%	S-1711A2831-I6T1U	—
2.8 V ±1.0%	3.2 V ±1.0%	S-1711A2832-I6T1U	S-1711A2832-M6T1x
2.8 V ±1.0%	3.3 V ±1.0%	S-1711A2833-I6T1U	S-1711A2833-M6T1x
2.85 V ±1.0%	1.5 V ±1.0%	S-1711A2J15-I6T1U	—
2.85 V ±1.0%	1.8 V ±1.0%	S-1711A2J18-I6T1U	—
2.85 V ±1.0%	2.85 V ±1.0%	S-1711A2J2J-I6T1U	S-1711A2J2J-M6T1x
2.85 V ±1.0%	3.0 V ±1.0%	—	S-1711A2J30-M6T1x
2.85 V ±1.0%	3.3 V ±1.0%	S-1711A2J33-I6T1U	—
2.9 V ±1.0%	2.9 V ±1.0%	S-1711A2929-I6T1U	S-1711A2929-M6T1x
2.9 V ±1.0%	3.3 V ±1.0%	—	S-1711A2933-M6T1x
3.0 V ±1.0%	1.5 V ±1.0%	S-1711A3015-I6T1U	S-1711A3015-M6T1x
3.0 V ±1.0%	1.8 V ±1.0%	S-1711A3018-I6T1U	S-1711A3018-M6T1x
3.0 V ±1.0%	2.5 V ±1.0%	S-1711A3025-I6T1U	S-1711A3025-M6T1x
3.0 V ±1.0%	2.8 V ±1.0%	S-1711A3028-I6T1U	—
3.0 V ±1.0%	3.0 V ±1.0%	S-1711A3030-I6T1U	S-1711A3030-M6T1x
3.0 V ±1.0%	3.3 V ±1.0%	S-1711A3033-I6T1U	S-1711A3033-M6T1x
3.1 V ±1.0%	2.8 V ±1.0%	S-1711A3128-I6T1U	—
3.3 V ±1.0%	1.8 V ±1.0%	S-1711A3318-I6T1U	—
3.3 V ±1.0%	2.5 V ±1.0%	—	S-1711A3325-M6T1x
3.3 V ±1.0%	2.8 V ±1.0%	—	S-1711A3328-M6T1x
3.3 V ±1.0%	3.0 V ±1.0%	—	S-1711A3330-M6T1x
3.3 V ±1.0%	3.3 V ±1.0%	S-1711A3333-I6T1U	S-1711A3333-M6T1x
3.3 V ±1.0%	4.8 V ±1.0%	S-1711A3348-I6T1U	S-1711A3348-M6T1x
3.3 V ±1.0%	5.0 V ±1.0%	S-1711A3350-I6T1U	—
3.4 V ±1.0%	3.4 V ±1.0%	S-1711A3434-I6T1U	—
4.0 V ±1.0%	2.0 V ±1.0%	—	S-1711A4020-M6T1x
5.0 V ±1.0%	2.5 V ±1.0%	S-1711A5025-I6T1U	S-1711A5025-M6T1x
5.0 V ±1.0%	3.0 V ±1.0%	S-1711A5030-I6T1U	—

Remark 1. Please contact our sales representatives for products other than the above.
2. x: G or U
3. Please select products of environmental code = U for Sn 100%, halogen-free products.

NOT RECOMMENDED FOR NEW DESIGN

4. 2 S-1711 Series B type

ON/OFF logic: Active “H” Pull-up Resistor: None
Discharge Shunt Function: Available Pull-down Resistor: None

Table 3

Voltage Regulator 1 Output Voltage	Voltage Regulator 2 Output Voltage	SNT-6A	SOT-23-6
1.5 V ±1.0%	1.8 V ±1.0%	S-1711B1518-I6T1U	S-1711B1518-M6T1x
1.5 V ±1.0%	2.8 V ±1.0%	S-1711B1528-I6T1U	—
1.5 V ±1.0%	2.9 V ±1.0%	—	S-1711B1529-M6T1x
1.8 V ±1.0%	2.5 V ±1.0%	S-1711B1825-I6T1U	S-1711B1825-M6T1x
1.8 V ±1.0%	2.8 V ±1.0%	S-1711B1828-I6T1U	S-1711B1828-M6T1x
1.8 V ±1.0%	3.2 V ±1.0%	—	S-1711B1832-M6T1x
1.8 V ±1.0%	3.3 V ±1.0%	S-1711B1833-I6T1U	S-1711B1833-M6T1x
2.5 V ±1.0%	1.5 V ±1.0%	—	S-1711B2515-M6T1x
2.5 V ±1.0%	1.8 V ±1.0%	S-1711B2518-I6T1U	S-1711B2518-M6T1x
2.5 V ±1.0%	2.8 V ±1.0%	S-1711B2528-I6T1U	S-1711B2528-M6T1x
2.6 V ±1.0%	1.8 V ±1.0%	—	S-1711B2618-M6T1x
2.7 V ±1.0%	1.8 V ±1.0%	—	S-1711B2718-M6T1x
2.8 V ±1.0%	1.5 V ±1.0%	S-1711B2815-I6T1U	S-1711B2815-M6T1x
2.8 V ±1.0%	1.8 V ±1.0%	S-1711B2818-I6T1U	S-1711B2818-M6T1x
2.8 V ±1.0%	2.5 V ±1.0%	—	S-1711B2825-M6T1x
2.8 V ±1.0%	2.8 V ±1.0%	S-1711B2828-I6T1U	S-1711B2828-M6T1x
2.8 V ±1.0%	3.3 V ±1.0%	S-1711B2833-I6T1U	—
3.0 V ±1.0%	3.0 V ±1.0%	—	S-1711B3030-M6T1x
3.0 V ±1.0%	3.3 V ±1.0%	S-1711B3033-I6T1U	S-1711B3033-M6T1x
3.0 V ±1.0%	3.6 V ±1.0%	—	S-1711B3036-M6T1x
3.3 V ±1.0%	3.3 V ±1.0%	S-1711B3333-I6T1U	S-1711B3333-M6T1x

Remark 1. Please contact our sales representatives for products other than the above.
2. x: G or U
3. Please select products of environmental code = U for Sn 100%, halogen-free products.

NOT RECOMMENDED FOR NEW DESIGN

4. 3 S-1711 Series C type

ON/OFF logic: Active “H” Pull-up Resistor: None
Discharge Shunt Function: None Pull-down Resistor: Available

Table 4

Voltage Regulator 1 Output Voltage	Voltage Regulator 2 Output Voltage	SNT-6A	SOT-23-6
1.5 V ±1.0%	1.5 V ±1.0%	S-1711C1515-I6T1U	S-1711C1515-M6T1x
1.8 V ±1.0%	1.5 V ±1.0%	S-1711C1815-I6T1U	S-1711C1815-M6T1x
1.8 V ±1.0%	2.5 V ±1.0%	—	S-1711C1825-M6T1x
1.8 V ±1.0%	2.7 V ±1.0%	S-1711C1827-I6T1U	S-1711C1827-M6T1x
1.8 V ±1.0%	2.75 V ±1.0%	S-1711C182H-I6T1U	S-1711C182H-M6T1x
1.8 V ±1.0%	2.8 V ±1.0%	S-1711C1828-I6T1U	—
1.8 V ±1.0%	3.2 V ±1.0%	—	S-1711C1832-M6T1x
1.85 V ±1.0%	2.8 V ±1.0%	S-1711C1J28-I6T1U	S-1711C1J28-M6T1x
2.4 V ±1.0%	2.4 V ±1.0%	S-1711C2424-I6T1U	S-1711C2424-M6T1x
2.4 V ±1.0%	2.5 V ±1.0%	S-1711C2425-I6T1U	S-1711C2425-M6T1x
2.5 V ±1.0%	1.5 V ±1.0%	S-1711C2515-I6T1U	S-1711C2515-M6T1x
2.5 V ±1.0%	1.8 V ±1.0%	S-1711C2518-I6T1U	S-1711C2518-M6T1x
2.5 V ±1.0%	2.5 V ±1.0%	S-1711C2525-I6T1U	S-1711C2525-M6T1x
2.8 V ±1.0%	1.5 V ±1.0%	S-1711C2815-I6T1U	S-1711C2815-M6T1x
2.8 V ±1.0%	1.8 V ±1.0%	S-1711C2818-I6T1U	S-1711C2818-M6T1x
2.8 V ±1.0%	2.8 V ±1.0%	S-1711C2828-I6T1U	S-1711C2828-M6T1x
2.8 V ±1.0%	2.9 V ±1.0%	S-1711C2829-I6T1U	S-1711C2829-M6T1x
2.8 V ±1.0%	3.0 V ±1.0%	S-1711C2830-I6T1U	S-1711C2830-M6T1x
2.8 V ±1.0%	3.3 V ±1.0%	S-1711C2833-I6T1U	S-1711C2833-M6T1x
2.85 V ±1.0%	2.85 V ±1.0%	S-1711C2J2J-I6T1U	S-1711C2J2J-M6T1x
2.9 V ±1.0%	2.9 V ±1.0%	S-1711C2929-I6T1U	S-1711C2929-M6T1x
3.0 V ±1.0%	1.5 V ±1.0%	S-1711C3015-I6T1U	S-1711C3015-M6T1x
3.0 V ±1.0%	1.8 V ±1.0%	S-1711C3018-I6T1U	S-1711C3018-M6T1x
3.0 V ±1.0%	2.5 V ±1.0%	S-1711C3025-I6T1U	S-1711C3025-M6T1x
3.0 V ±1.0%	3.0 V ±1.0%	S-1711C3030-I6T1U	S-1711C3030-M6T1x
3.0 V ±1.0%	3.3 V ±1.0%	S-1711C3033-I6T1U	S-1711C3033-M6T1x
3.1 V ±1.0%	3.1 V ±1.0%	—	S-1711C3131-M6T1x

Remark 1. Please contact our sales representatives for products other than the above.
2. x: G or U
3. Please select products of environmental code = U for Sn 100%, halogen-free products.

NOT RECOMMENDED FOR NEW DESIGN

4. 4 S-1711 Series D type

ON/OFF logic: Active “H” Pull-up Resistor: None
Discharge Shunt Function: None Pull-down Resistor: None

Table 5

Voltage Regulator 1 Output Voltage	Voltage Regulator 2 Output Voltage	SNT-6A	SOT-23-6
1.8 V ±1.0%	2.5 V ±1.0%	—	S-1711D1825-M6T1x
1.8 V ±1.0%	2.6 V ±1.0%	—	S-1711D1826-M6T1x
1.8 V ±1.0%	2.8 V ±1.0%	S-1711D1828-I6T1U	S-1711D1828-M6T1x
1.8 V ±1.0%	3.2 V ±1.0%	—	S-1711D1832-M6T1x
1.9 V ±1.0%	2.5 V ±1.0%	S-1711D1925-I6T1U	S-1711D1925-M6T1x
2.5 V ±1.0%	1.8 V ±1.0%	S-1711D2518-I6T1U	S-1711D2518-M6T1x
2.5 V ±1.0%	2.8 V ±1.0%	S-1711D2528-I6T1U	S-1711D2528-M6T1x
2.5 V ±1.0%	2.85 V ±1.0%	S-1711D252J-I6T1U	—
2.6 V ±1.0%	2.9 V ±1.0%	—	S-1711D2629-M6T1x
2.8 V ±1.0%	1.5 V ±1.0%	S-1711D2815-I6T1U	S-1711D2815-M6T1x
2.85 V ±1.0%	2.85 V ±1.0%	S-1711D2J2J-I6T1U	—
4.2 V ±1.0%	3.0 V ±1.0%		S-1711D4230-M6T1x

4. 5 S-1711 Series E type

ON/OFF logic: Active “L” Pull-up Resistor: Available
Discharge Shunt Function: Available Pull-down Resistor: None

Table 6

Voltage Regulator 1 Output Voltage	Voltage Regulator 2 Output Voltage	SNT-6A	SOT-23-6
1.8 V ±1.0%	3.3 V ±1.0%	—	S-1711E1833-M6T1x
2.8 V ±1.0%	1.8 V ±1.0%	S-1711E2818-I6T1U	S-1711E2818-M6T1x
3.3 V ±1.0%	3.3 V ±1.0%	—	S-1711E3333-M6T1x

4. 6 S-1711 Series F type

ON/OFF logic: Active “L” Pull-up Resistor: None
Discharge Shunt Function: Available Pull-down Resistor: None

Table 7

Voltage Regulator 1 Output Voltage	Voltage Regulator 2 Output Voltage	SNT-6A	SOT-23-6
2.8 V ±1.0%	1.8 V ±1.0%	S-1711F2818-I6T1U	—

Remark 1. Please contact our sales representatives for products other than the above.
2. x: G or U
3. Please select products of environmental code = U for Sn 100%, halogen-free products.

NOT RECOMMENDED FOR NEW DESIGN

4. 7 S-1711 Series G type

ON/OFF logic: Active “L” Pull-up Resistor: Available
Discharge Shunt Function: None Pull-down Resistor: None

Table 8

Voltage Regulator 1 Output Voltage	Voltage Regulator 2 Output Voltage	SNT-6A	SOT-23-6
2.8 V ±1.0%	3.0 V ±1.0%	S-1711G2830-I6T1U	—

4. 8 S-1711 Series H type

ON/OFF logic: Active “L” Pull-up Resistor: None
Discharge Shunt Function: None Pull-down Resistor: None

Table 9

Voltage Regulator 1 Output Voltage	Voltage Regulator 2 Output Voltage	SNT-6A	SOT-23-6
2.5 V ±1.0%	1.8 V ±1.0%	—	S-1711H2518-M6T1x

Remark 1. Please contact our sales representatives for products other than the above.
2. x: G or U
3. Please select products of environmental code = U for Sn 100%, halogen-free products.

NOT RECOMMENDED FOR NEW DESIGN

■ Pin Configurations

1. SNT-6A

Top view



Figure 9

Table 10

Pin No.	Symbol	Description
1	VOUT1	Output voltage pin 1
2	VIN	Input voltage pin
3	VOUT2	Output voltage pin 2
4	ON/OFF2	ON/OFF pin 2
5	VSS	GND pin
6	ON/OFF1	ON/OFF pin 1

2. SOT-23-6

Top view

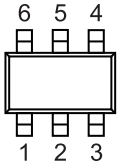

Figure 10

Table 11

Pin No.	Symbol	Description
1	VOUT1	Output voltage pin 1
2	VIN	Input voltage pin
3	VOUT2	Output voltage pin 2
4	ON/OFF2	ON/OFF pin 2
5	VSS	GND pin
6	ON/OFF1	ON/OFF pin 1

NOT RECOMMENDED FOR NEW DESIGN

■ Absolute Maximum Ratings

Table 12

(Ta = 25°C unless otherwise specified)

Item		Symbol	Absolute Maximum Rating	Unit
Input voltage		V_{IN}	V_{SS}–0.3 to V_{SS}+7	V
		$V_{ON/OFF1}$, $V_{ON/OFF2}$	V_{SS}–0.3 to V_{IN}+0.3	V
Output voltage		V_{OUT1}, V_{OUT2}	V_{SS}–0.3 to V_{IN}+0.3	V
Power dissipation	SNT-6A	P_D	400*1	mW
	SOT-23-6		300 (When not mounted on board)	mW
			650*1	mW
Operation ambient temperature		T_{opr}	–40 to +85	°C
Storage temperature		T_{stg}	–40 to +125	°C

*1. When mounted on board
[Mounted board]
(1) Board size: 114.3 mm × 76.2 mm × t1.6 mm
(2) Name: JEDEC STANDARD51-7

Caution The absolute maximum ratings are rated values exceeding which the product could suffer physical damage. These values must therefore not be exceeded under any conditions.

(1) When mounted on board

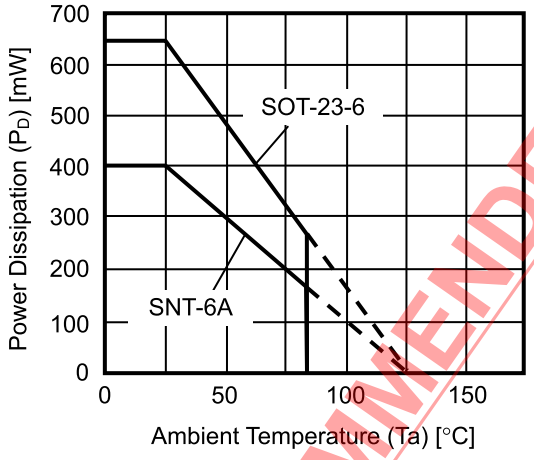

(2) When not mounted on board

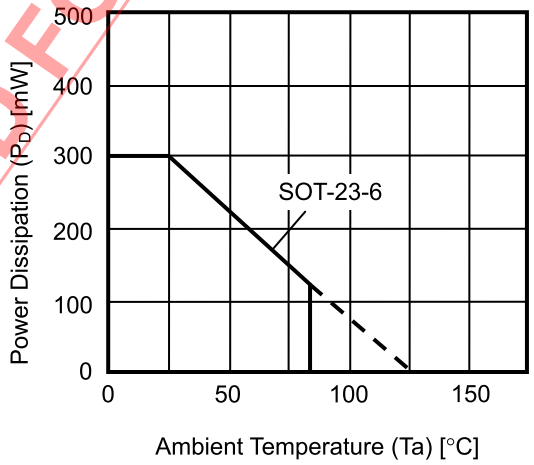

Figure 11 Power Dissipation of Package

NOT RECOMMENDED FOR NEW DESIGN

■ Electrical Characteristics

Table 13

Total (2 circuits) (Ta = 25°C unless otherwise specified)

Item	Symbol	Condition	Min.	Typ.	Max.	Unit	Test Circuit
Current consumption	I_{SS}	V_{IN} = 6.5 V, no load	—	140	180	µA	1

Voltage regulator 1 or Voltage regulator 2 (Per circuit) (Ta = 25°C unless otherwise specified)

Item	Symbol	Condition		Min.	Typ.	Max.	Unit	Test Circuit
Output voltage*1	$V_{OUT(E)}$	V_{IN} = $V_{OUT(S)}$ + 1.0 V, I_{OUT} = 30 mA		$V_{OUT(S)}$ × 0.99	$V_{OUT(S)}$	$V_{OUT(S)}$ × 1.01	V	2, 3
Output current*2	I_{OUT}	V_{IN} ≥ $V_{OUT(S)}$ + 1.0 V		150*5	—	—	mA	4, 5
Dropout voltage*3	V_{drop}	I_{OUT} = 150 mA	$V_{OUT(S)}$ = 1.5 V	0.50	0.54	0.58	V	2, 3
			$V_{OUT(S)}$ = 1.6 V	0.40	0.44	0.48	V	2, 3
			$V_{OUT(S)}$ = 1.7 V	0.30	0.34	0.39	V	2, 3
			1.8 V ≤ $V_{OUT(S)}$ ≤ 2.0 V	0.20	0.26	0.39	V	2, 3
			2.1 V ≤ $V_{OUT(S)}$ ≤ 2.7 V	—	0.24	0.36	V	2, 3
			2.8 V ≤ $V_{OUT(S)}$ ≤ 5.5 V	—	0.20	0.35	V	2, 3
Line regulation	$\frac{\Delta V_{OUT1}}{\Delta V_{IN} \bullet V_{OUT}}$	$V_{OUT(S)}$ + 0.5 V ≤ V_{IN} ≤ 6.5 V, I_{OUT} = 30 mA		—	0.02	0.1	% / V	2, 3
Load regulation	ΔV_{OUT2}	V_{IN} = $V_{OUT(S)}$ + 1.0 V, 1.0 mA ≤ I_{OUT} ≤ 150 mA		—	20	40	mV	2, 3
Output voltage temperature coefficient*4	$\frac{\Delta V_{OUT}}{\Delta Ta \bullet V_{OUT}}$	V_{IN} = $V_{OUT(S)}$ + 1.0 V, I_{OUT} = 30 mA, −40°C ≤ Ta ≤ +85°C		—	±100	—	ppm / °C	2, 3
Current consumption during operation	I_{SS1}	V_{IN} = $V_{OUT(S)}$ + 1.0 V, ON/OFF pin = ON, no load		—	70	90	µA	1
Current consumption during power-off	I_{SS2}	V_{IN} = $V_{OUT(S)}$ + 1.0 V, ON/OFF pin = OFF, no load		—	0.1	1.0	µA	1
Input voltage	V_{IN}	—		2.0	—	6.5	V	1
ON/OFF pin input voltage "H"	V_{SH}	V_{IN} = $V_{OUT(S)}$ + 1.0 V, R_L = 1.0 kΩ		1.5	—	—	V	6, 7
ON/OFF pin input voltage "L"	V_{SL}	V_{IN} = $V_{OUT(S)}$ + 1.0 V, R_L = 1.0 kΩ		—	—	0.3	V	6, 7
ON/OFF pin input current "H"	I_{SH}	V_{IN} = 6.5 V, $V_{ON/OFF}$ = 6.5 V	A/ C type	1.0	2.5	4.2	µA	6, 7
			B/ D/ E/ F/ G/ H type	−0.1	—	0.1	µA	
ON/OFF pin input current "L"	I_{SL}	V_{IN} = 6.5 V, $V_{ON/OFF}$ = 0 V	E/ G type	1.0	2.5	4.2	µA	6, 7
			A/ B/ C/ D/ F/ H type	−0.1	—	0.1	µA	
Ripple rejection	$\lvert RR \rvert$	V_{IN} = $V_{OUT(S)}$ + 1.0 V, f = 1.0 kHz, ΔV_{rip} = 0.5 Vrms, I_{OUT} = 30 mA		—	70	—	dB	8, 9
Short-circuit current	I_{short}	V_{IN} = $V_{OUT(S)}$ + 1.0 V, ON/OFF pin = ON, V_{OUT} = 0 V		—	170	—	mA	4, 5

S-1711 Series A/B/E/F type (With discharge shunt function)

Item	Symbol	Condition	Min.	Typ.	Max.	Unit	Test Circuit
Discharge shunt resistance during power-off	R_{LOW}	V_{OUT} = 0.1 V, V_{IN} = 6.5 V	—	100	—	Ω	4, 5

S-1711 Series A/C/E/G type (With pull-up/pull-down resistor)

Item	Symbol	Condition	Min.	Typ.	Max.	Unit	Test Circuit
Power-off pull-up/pull-down resistor	R_{PD}	—	1.0	2.6	5.0	MΩ	6, 7

NOT RECOMMENDED FOR NEW DESIGN

***1.** $V_{OUT(S)}$: Set output voltage
$V_{OUT(E)}$: Actual output voltage
Output voltage when fixing I_{OUT}(=30 mA) and inputting $V_{OUT(S)}$ + 1.0 V

***2.** The output current at which the output voltage becomes 95% of $V_{OUT(E)}$ after gradually increasing the output current.

***3.** $V_{drop} = V_{IN1} - (V_{OUT3} \times 0.98)$
V_{OUT3} is the output voltage when $V_{IN} = V_{OUT(S)} + 1.0$ V and I_{OUT} = 150 mA.
V_{IN1} is the input voltage at which the output voltage becomes 98% of V_{OUT3} after gradually decreasing the input voltage.

***4.** A change in the temperature of the output voltage [mV/°C] is calculated using the following equation.

$$\frac{\Delta V_{OUT}}{\Delta Ta}\ [\text{mV/°C}]^{*1} = V_{OUT(S)}\ [\text{V}]^{*2} \times \frac{\Delta V_{OUT}}{\Delta Ta \bullet V_{OUT}}\ [\text{ppm/°C}]^{*3} \div 1000$$

***1.** Change in temperature of output voltage
***2.** Set output voltage
***3.** Output voltage temperature coefficient

***5.** The output current can be at least this value.
Due to restrictions on the package power dissipation, this value may not be satisfied. Attention should be paid to the power dissipation of the package when the output current is large.
This specification is guaranteed by design.

NOT RECOMMENDED FOR NEW DESIGN

■ Test Circuits

1.

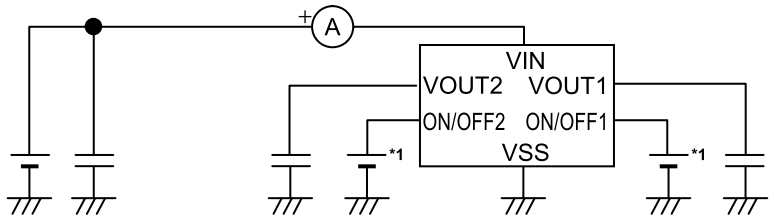

*1. Set to V_{IN} or GND

Figure 12

2.

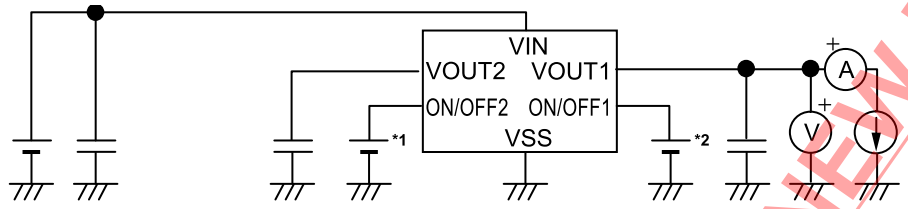

*1. Set to OFF
*2. Set to ON

Figure 13

3.

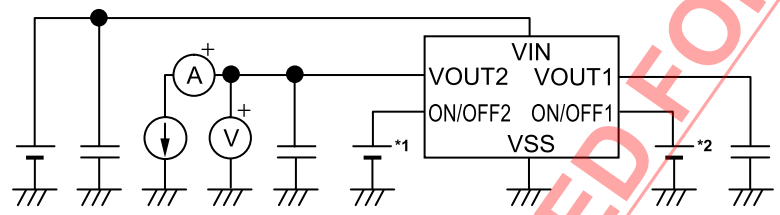

*1. Set to ON
*2. Set to OFF

Figure 14

4.

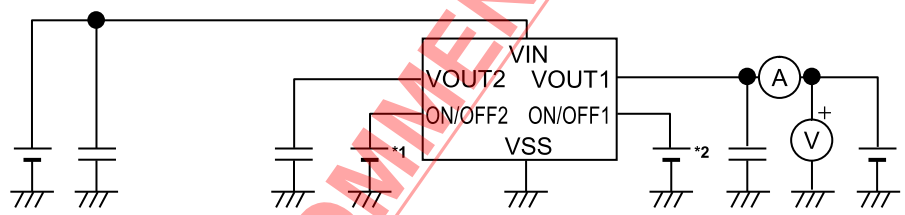

*1. Set to OFF
*2. Set to V_{IN} or GND

Figure 15

5.

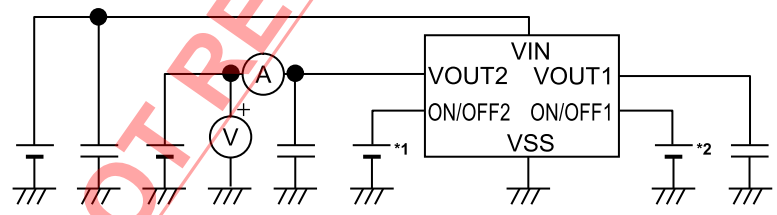

*1. Set to V_{IN} or GND
*2. Set to OFF

Figure 16

NOT RECOMMENDED FOR NEW DESIGN

6.

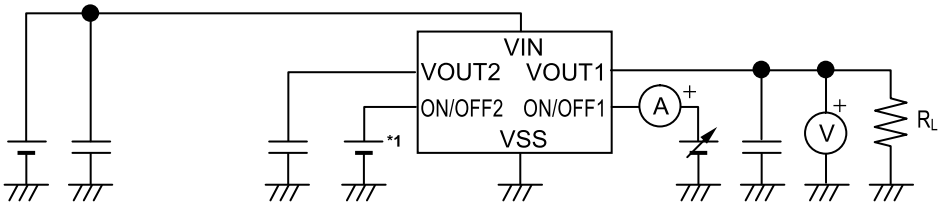

*1. Set to OFF

Figure 17

7.

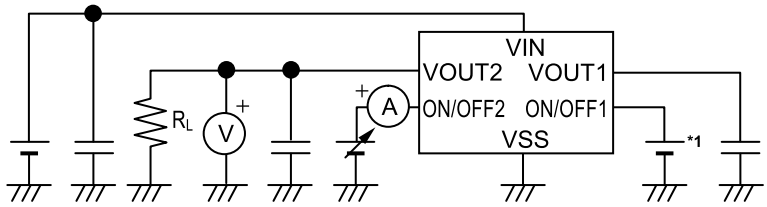

*1. Set to OFF

Figure 18

8.

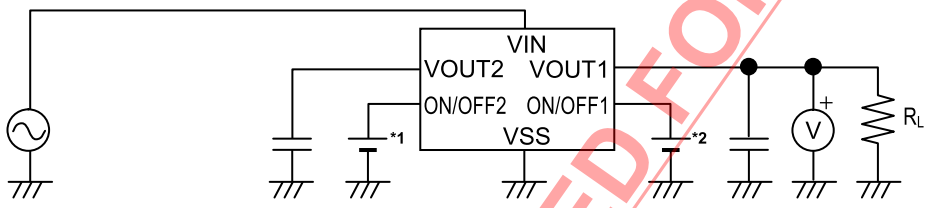

*1. Set to OFF
*2. Set to ON

Figure 19

9.

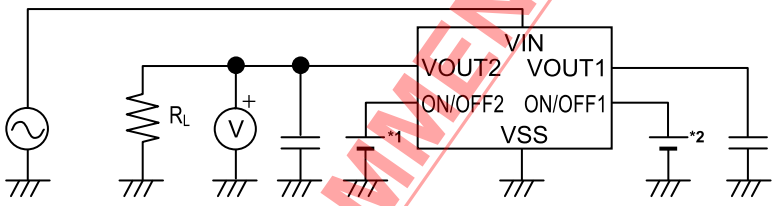

*1. Set to ON
*2. Set to OFF

Figure 20

NOT RECOMMENDED FOR NEW DESIGN

■ Standard Circuit

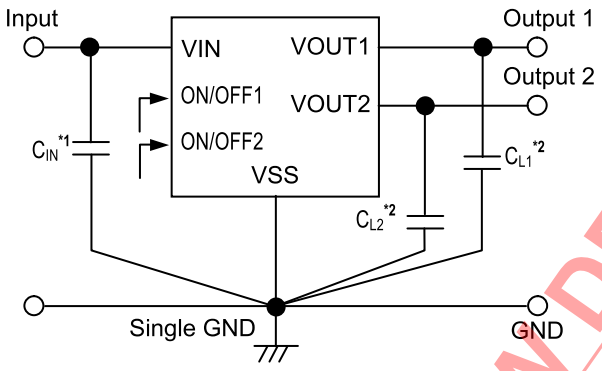

***1.** C_{IN} is a capacitor for stabilizing the input.
***2.** A ceramic capacitor of 1.0 µF or more can be used for C_{L1} and C_{L2}.

Figure 21

Caution The above connection diagram and constants will not guarantee successful operation. Perform thorough evaluation using the actual application to set the constants.

■ Condition of Application

Input capacitor (C_{IN}):	1.0 µF or more
Output capacitor (C_{L1}, C_{L2}):	1.0 µF or more
ESR of output capacitor:	1.0 Ω or less

Caution Generally a series regulator may cause oscillation, depending on the selection of external parts. Confirm that no oscillation occurs in the application for which the above capacitors are used.
Use input/output capacitor which has good temperature characteristics (conforming to the ceramic capacitor EIA X5R (JIS B) characteristics).

■ Selection of Input and Output Capacitors (C_{IN}, C_{L1}, C_{L2})

The S-1711 Series requires an output capacitor between the VOUT and VSS pins for phase compensation. Operation is stabilized by a ceramic capacitor with an output capacitance of 1.0 µF or more in the entire temperature range. When using an OS capacitor, a tantalum capacitor, or an aluminum electrolytic capacitor, the capacitance must be 1.0 µF or more, and the ESR must be 1.0 Ω or less.
The value of the output overshoot or undershoot transient response varies depending on the value of the output capacitor. The required capacitance of the input capacitor differs depending on the application.
The recommended capacitance for an application is $C_{IN} \geq 1.0$ µF, $C_{L1} \geq 1.0$ µF, $C_{L2} \geq 1.0$ µF; however, when selecting the output capacitor, perform sufficient evaluation, including evaluation of temperature characteristics, on the actual device.

NOT RECOMMENDED FOR NEW DESIGN

■ Explanation of Terms

1. Low dropout voltage regulator

This voltage regulator has the low dropout voltage due to its built-in low on-resistance transistor.

2. Low ESR

A capacitor whose ESR (Equivalent Series Resistance) is low. The S-1711 Series enables use of a low ESR capacitor, such as a ceramic capacitor, for the output capacitor C_{L1}, C_{L2}. ESR of 1.0 Ω or less can be used.

3. Output voltage (V_{OUT})

The accuracy of the output voltage is ensured at ±1.0% under the specified conditions of fixed input voltage*1, fixed output current, and fixed temperature.

***1.** Differs depending on the product.

Caution If the above conditions change, the output voltage value may vary and exceed the accuracy range of the output voltage. Refer to "■ Electrical Characteristics" and "■ Characteristics (Typical Data) (Per circuit)" for details.

4. Line regulation $\left(\frac{\Delta V_{OUT1}}{\Delta V_{IN} \bullet V_{OUT}}\right)$

Indicates the dependency of the output voltage on the input voltage. That is, the values show how much the output voltage changes due to a change in the input voltage with the output current remaining unchanged.

5. Load regulation (ΔV_{OUT2})

Indicates the dependency of the output voltage on the output current. That is, the values show how much the output voltage changes due to a change in the output current with the input voltage remaining unchanged.

6. Dropout voltage (V_{drop})

Indicates the difference between input voltage (V_{IN1}) and the output voltage when; decreasing input voltage (V_{IN}) gradually until the output voltage has dropped out to the value of 98% of output voltage (V_{OUT3}), which is at V_{IN} = $V_{OUT(S)}$ + 1.0 V.

$V_{drop} = V_{IN1} - (V_{OUT3} \times 0.98)$

NOT RECOMMENDED FOR NEW DESIGN

7. Output voltage temperature coefficient $\left(\frac{\Delta V_{OUT}}{\Delta Ta \bullet V_{OUT}}\right)$

The shaded area in **Figure 22** is the range where V_{OUT} varies in the operation temperature range when the output voltage temperature coefficient is ±100 ppm/°C.

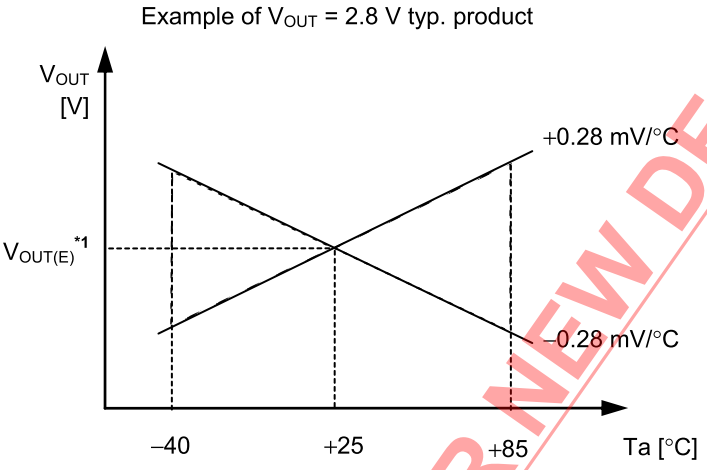

***1.** $V_{OUT(E)}$ is the value of the output voltage measured at Ta = +25°C.

Figure 22

A change in the temperature of the output voltage [mV/°C] is calculated using the following equation.

$$\frac{\Delta V_{OUT}}{\Delta Ta}\ [\text{mV/°C}]^{*1} = V_{OUT(S)}\ [\text{V}]^{*2} \times \frac{\Delta V_{OUT}}{\Delta Ta \bullet V_{OUT}}\ [\text{ppm/°C}]^{*3} \div 1000$$

***1.** Change in temperature of output voltage
***2.** Set output voltage
***3.** Output voltage temperature coefficient

NOT RECOMMENDED FOR NEW DESIGN

■ Operation

1. Basic operation

Figure 23 shows the block diagram of the S-1711 Series.
The error amplifier compares the reference voltage (V_{ref}) with feedback voltage (V_{fb}), which is the output voltage resistance-divided by feedback resistors (R_s and R_f). It supplies the gate voltage necessary to maintain the constant output voltage which is not influenced by the input voltage and temperature change, to the output transistor.

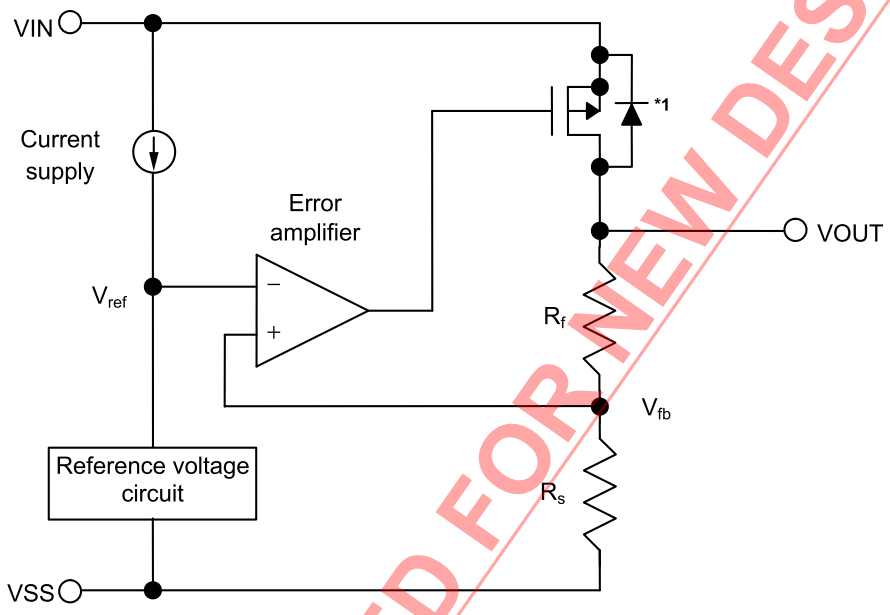

*1. Parasitic diode

Figure 23

2. Output transistor

In the S-1711 Series, a low on-resistance P-channel MOS FET is used as the output transistor.
Be sure that V_{OUT} does not exceed V_{IN} + 0.3 V to prevent the voltage regulator from being damaged due to reverse current flowing from the VOUT pin through a parasitic diode to the VIN pin, when the potential of V_{OUT} became higher than V_{IN}.

NOT RECOMMENDED FOR NEW DESIGN

3. ON/OFF pin 1 and 2

These pins start and stop the regulator.

When the ON/OFF pin is set to OFF level, the entire internal circuit stops operating, and the built-in P-channel MOS FET output transistor between the VIN pin and the VOUT pin is turned off, reducing current consumption significantly.
Since the S-1711 Series A/ B/ E/ F type has a built-in discharge shunt circuit to discharge the output capacitance, the VOUT pin is forcibly set to V_{SS} level. In the S-1711 Series C/ D/ G/ H type, the VOUT pin is set to V_{SS} level through several hundred kΩ internal divided resistors between the VOUT pin and the VSS pin. Note that the current consumption increases when a voltage of 0.3 V to V_{IN} – 0.3 V is applied to the ON/OFF pin.

The ON/OFF pin is configured as shown in **Figure 24** and **Figure 25**. In the S-1711 Series A/ C/ E/ G type, the ON/OFF pin is internally pulled up or pulled down to the VSS pin in the floating status, so the VOUT pin is set to the V_{SS} level. In the S-1711 Series B/ D/ F/ H type, the ON/OFF pin is not internally pulled up or pulled down, so do not use the ON/OFF pin in the floating status. When not using the ON/OFF pin, connect it to the VIN pin in the product B/ D type, and connect it to the VSS pin in F/ H type.

Table 14

Product Type	ON/OFF Pin	Internal Circuit	VOUT Pin Voltage	Current Consumption
A/ B/ C/ D	"H": ON	Operate	Set value	I_{SS1}*1
A/ B/ C/ D	"L": OFF	Stop	V_{SS} level	I_{SS2}
E/ F/ G/ H	"H": OFF	Stop	V_{SS} level	I_{SS2}
E/ F/ G/ H	"L": ON	Operate	Set value	I_{SS1}*1

***1.** Note that the IC's current consumption increases as much as current flows into the pull-up/pull-down resistor when; the ON/OFF pin is connected to the VIN pin in the A/ C type, the ON/OFF pin is connected to the VSS pin in the E/ G type (Refer to **Figure 24**).

(1) S-1711 Series A/ C/ E/ G Type

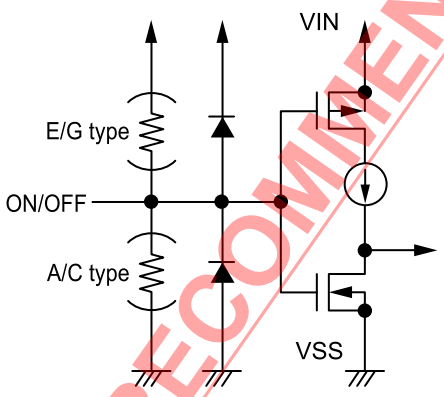

Figure 24

(2) S-1711 Series B/ D/ F/ H Type

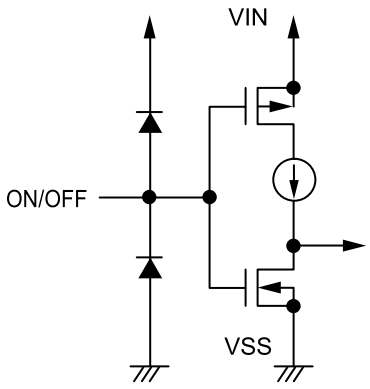

Figure 25

NOT RECOMMENDED FOR NEW DESIGN

4. Discharge shunt function (S-1711 Series A/ B/ E/ F type)

The S-1711 Series A/ B/ E/ F type has a built-in discharge shunt circuit to discharge the output capacitance. When the ON/OFF pin is set to OFF level, turns the output transistor off, and turns the discharge shunt circuit on so that the output capacitor discharges. These types allow the VOUT pin to reach V_{SS} level faster than the S-1711 Series C / D / G / H type that does not have a discharge shunt circuit.

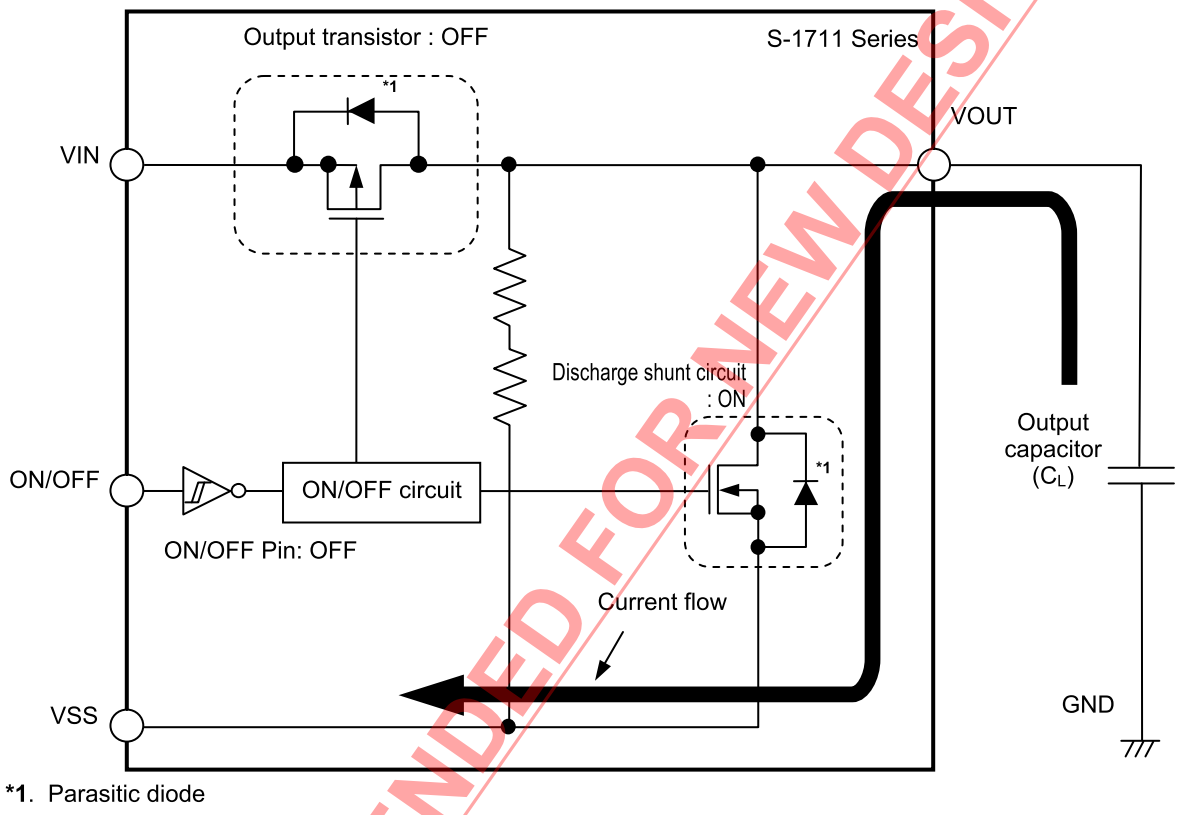

Figure 26

5. Pull-down/pull-up resistor (S-1711 Series A/ C/ E/ G type)

In the S-1711 Series A/ C/ E/ G type, the ON/OFF pin is internally pulled up to the VIN pin or pulled down to the VSS pin in the floating status, so the VOUT pin is set to the V_{SS} level.

Note that the IC's current consumption increases as much as current flows into the pull-up / pull-down resistor when; the ON / OFF pin is connected to the VIN pin in the A / C type, the ON / OFF pin is connected to the VSS pin in the E / G type.

NOT RECOMMENDED FOR NEW DESIGN

■ Precautions

- Wiring patterns for the VIN pin, the VOUT pin and GND should be designed so that the impedance is low. When mounting an output capacitor between the VOUT pin and the VSS pin (C_{L1}, C_{L2}) and a capacitor for stabilizing the input between the VIN pin and the VSS pin (C_{IN}), the distance from the capacitors to these pins should be as short as possible.
- Note that generally the output voltage may increase when a series regulator is used at low load current (1.0 mA or less).
- Note that generally the output voltage may increase due to the leakage current from an output driver when a series regulator is used at high temperature.
- Generally a series regulator may cause oscillation, depending on the selection of external parts. The following conditions are recommended for the S-1711 Series. However, be sure to perform sufficient evaluation under the actual usage conditions for selection, including evaluation of temperature characteristics.

Input capacitor (C_{IN}):	1.0 µF or more
Output capacitor (C_{L1}, C_{L2}):	1.0 µF or more
Equivalent series resistance (ESR):	1.0 Ω or less

  Use input/output capacitor which has good temperature characteristics (conforming to the ceramic capacitor EIA X5R (JIS B) characteristics).

- The voltage regulator may oscillate when the impedance of the power supply is high and the input capacitance is small or an input capacitor is not connected.
- If the output capacitance is small, power supply's fluctuation and the characteristics of load fluctuation become worse. Sufficiently evaluate the output voltage's fluctuation with the actual device.
- Overshoot may occur in the output voltage momentarily if the voltage is rapidly raised at power-on or when the power supply fluctuates. Sufficiently evaluate the output voltage at power-on with the actual device.
- The application conditions for the input voltage, the output voltage, and the load current should not exceed the package power dissipation.
- Do not apply an electrostatic discharge to this IC that exceeds the performance ratings of the built-in electrostatic protection circuit.
- In determining the output current, attention should be paid to the output current value specified in **Table 13** in "■ **Electrical Characteristics**" and footnote ***5** of the table.
- ABLIC Inc. claims no responsibility for any disputes arising out of or in connection with any infringement by products including this IC of patents owned by a third party.

NOT RECOMMENDED FOR NEW DESIGN

■ Characteristics (Typical Data) (Per circuit)

1. Output Voltage vs. Output Current (When Load Current Increases) (Ta = 25°C)

V_{OUT} = 1.5 V

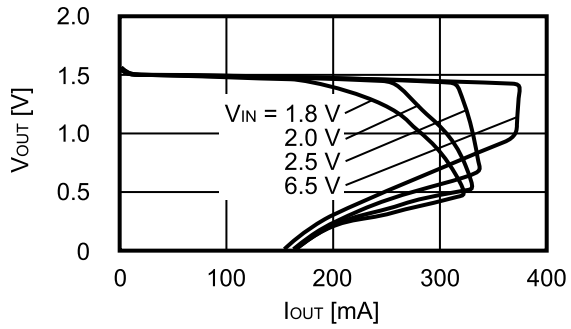

V_{OUT} = 3.0 V

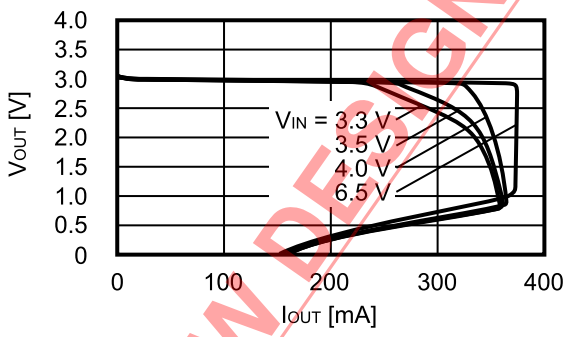

V_{OUT} = 5.0 V

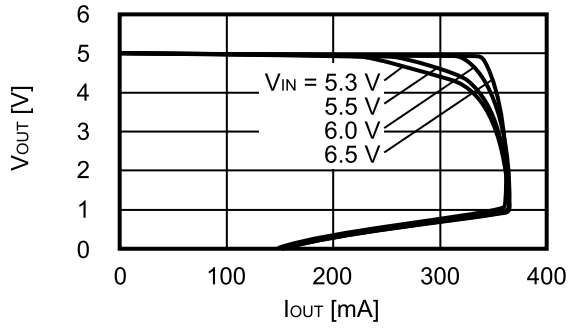

Remark In determining the output current, attention should be paid to the following.
1. The minimum output current value and footnote ***5** specified in **Table 13** in the "■ **Electrical Characteristics**"
2. The package power dissipation

2. Output Voltage vs. Input Voltage (Ta = 25°C)

V_{OUT} = 1.5 V

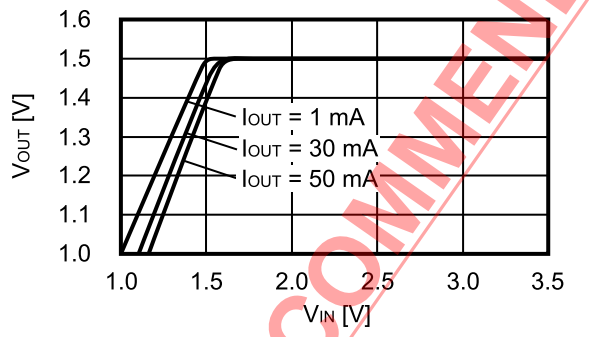

V_{OUT} = 3.0 V

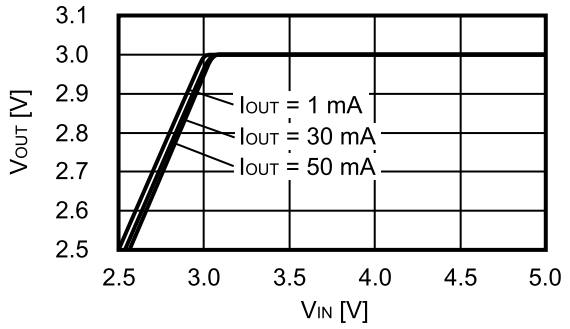

V_{OUT} = 5.0 V

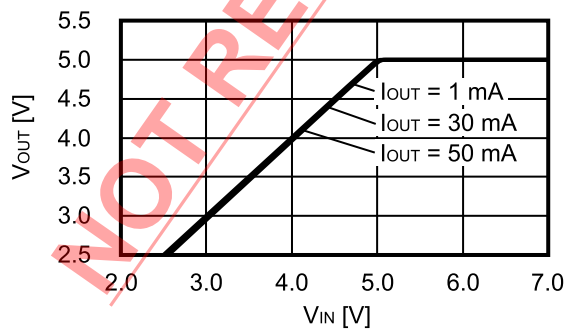

NOT RECOMMENDED FOR NEW DESIGN

3. Dropout Voltage vs. Output Current

V_{OUT} = 1.5 V

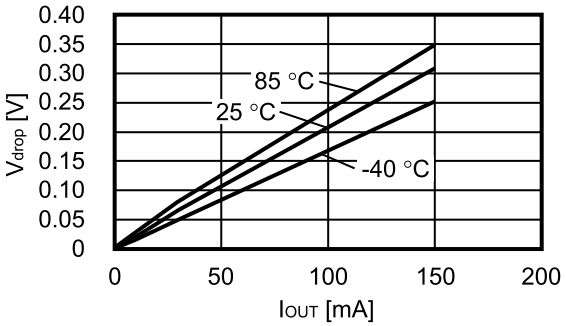

V_{OUT} = 3.0 V

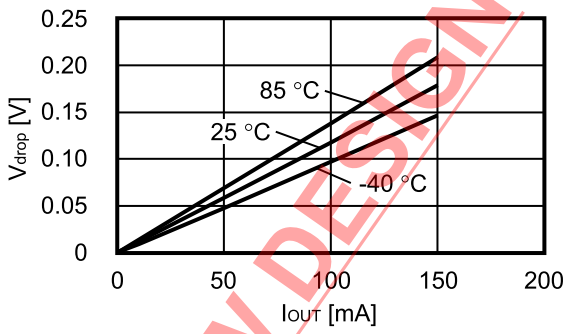

V_{OUT} = 5.0 V

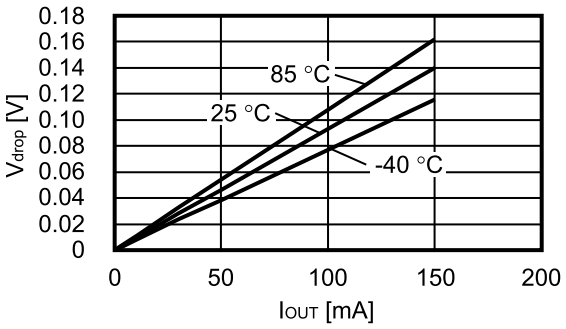

4. Dropout Voltage vs. Set Output Voltage

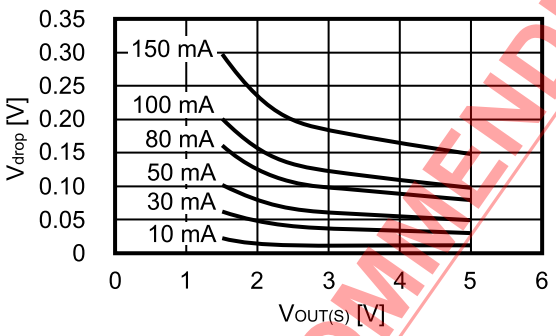

NOT RECOMMENDED FOR NEW DESIGN

5. Output Voltage vs. Ambient Temperature

V_{OUT} = 1.5 V

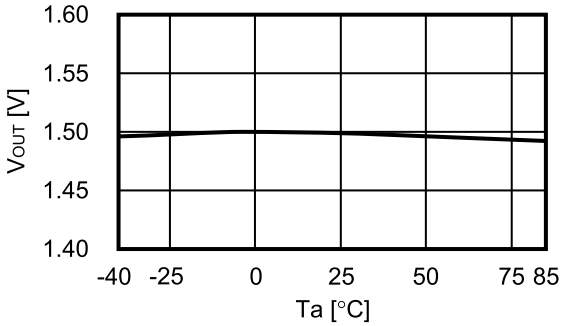

V_{OUT} = 3.0 V

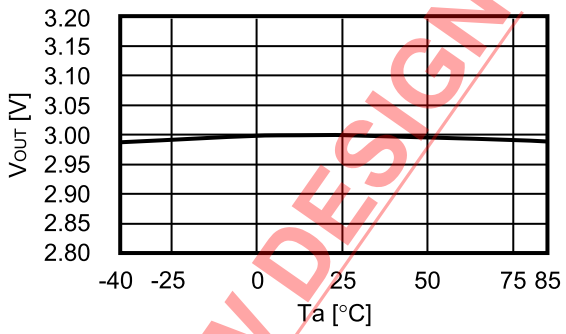

V_{OUT} = 5.0 V

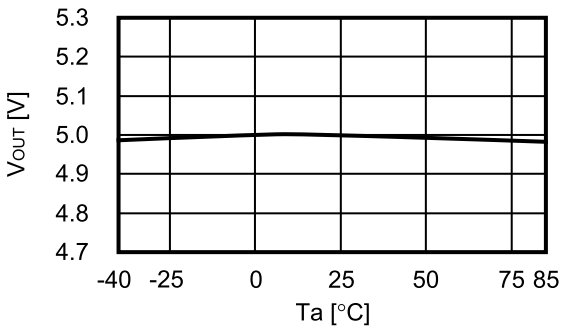

6. Current Consumption vs. Input Voltage

V_{OUT} = 1.5 V

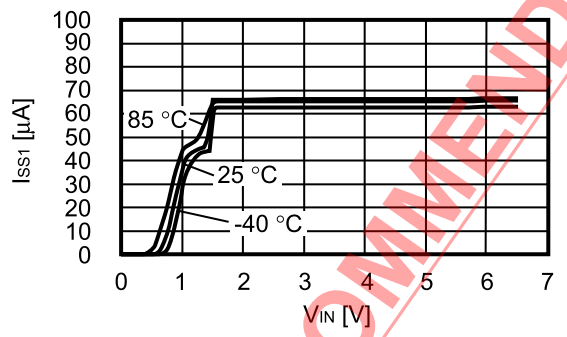

V_{OUT} = 3.0 V

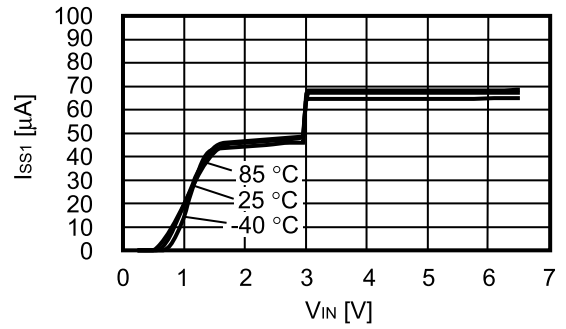

V_{OUT} = 5.0 V

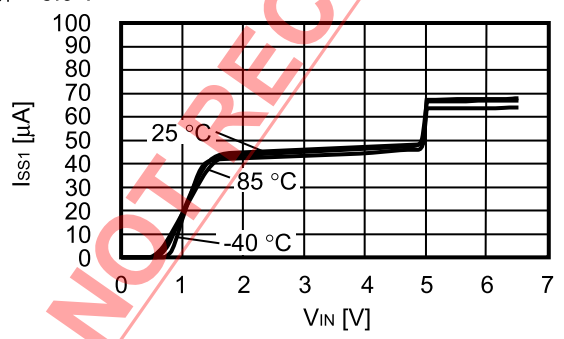

NOT RECOMMENDED FOR NEW DESIGN

7. Ripple Rejection (Ta = 25°C)

V_{OUT} = 1.5 V

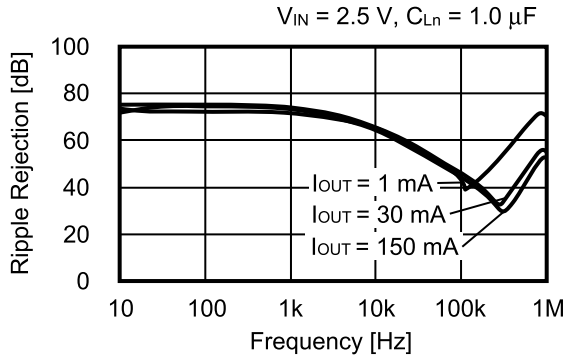

V_{OUT} = 3.0 V

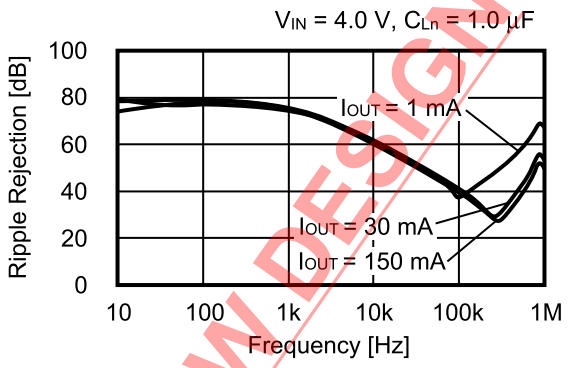

V_{OUT} = 5.0 V

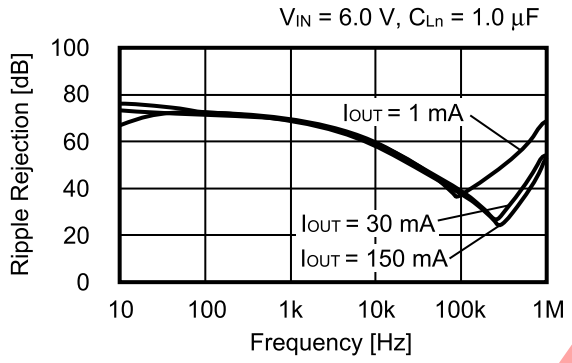

Remark C_{Ln}: Output capacitor set to the VOUTn pin externally (n = 1, 2)

NOT RECOMMENDED FOR NEW DESIGN

■ Reference Data (Per circuit)

1. Input Transient Response Characteristics (Ta = 25°C) Common to VR1 and 2

V_{OUT} = 1.5 V
I_{OUT} = 30 mA, $t_r = t_f$ = 5.0 µs, C_{Ln} = 1.0 µF, C_{IN} = 1.0 µF

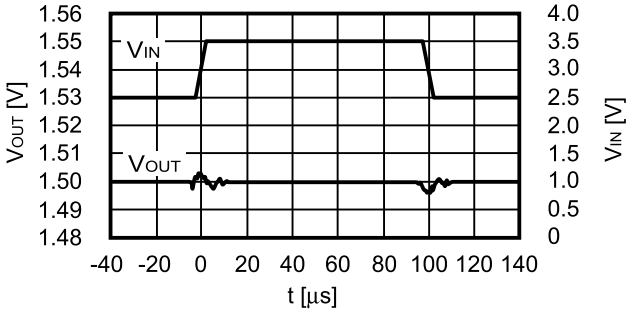

V_{OUT} = 3.0 V
I_{OUT} = 30 mA, $t_r = t_f$ = 5.0 µs, C_{Ln} = 1.0 µF, C_{IN} = 1.0 µF

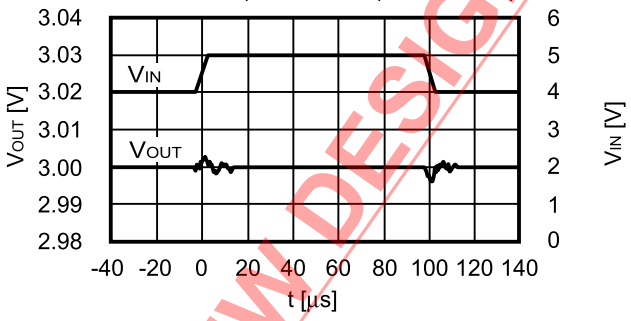

V_{OUT} = 5.0 V
I_{OUT} = 30 mA, $t_r = t_f$ = 5.0 µs, C_{Ln} = 1.0 µF, C_{IN} = 1.0 µF

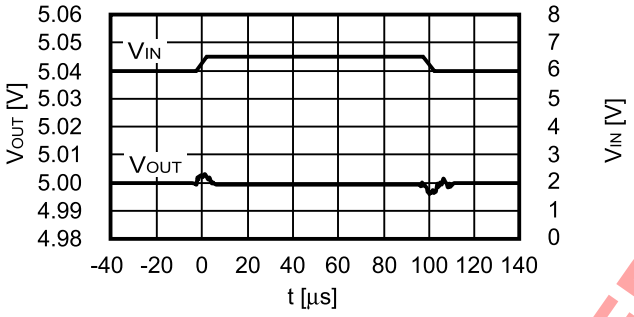

2. Load Transient Response Characteristics (Ta = 25°C)

V_{OUT} = 1.5 V
V_{IN} = 2.5 V, C_{Ln} = 1.0 µF, C_{IN} = 1.0 µF, I_{OUT} = 50 mA ↔ 100 mA

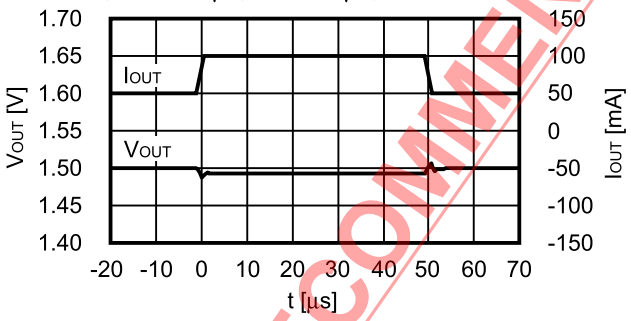

V_{OUT} = 3.0 V
V_{IN} = 4.0 V, C_{Ln} = 1.0 µF, C_{IN} = 1.0 µF, I_{OUT} = 50 mA ↔ 100 mA

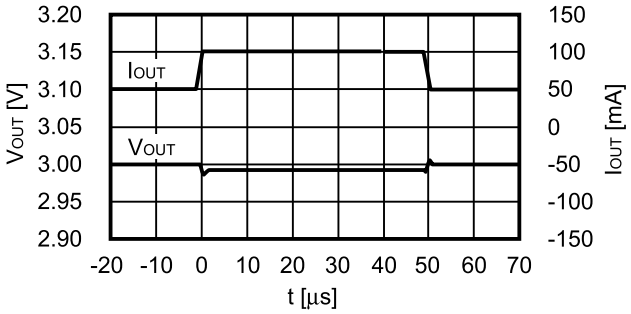

V_{OUT} = 5.0 V
V_{IN} =6.0 V, C_{Ln} = 1.0 µF, C_{IN} = 1.0 µF, I_{OUT} = 50 mA ↔ 100 mA

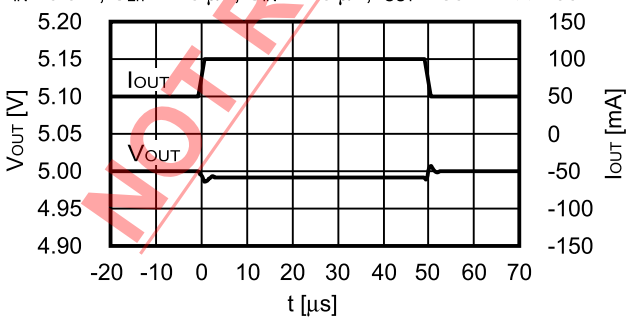

Remark C_{Ln}: Output capacitor set to the VOUTn pin externally (n = 1, 2)

NOT RECOMMENDED FOR NEW DESIGN

3. ON / OFF Pin Transient Response Characteristics (Ta = 25°C)

V_{OUT} = 1.5 V
V_{IN} = 2.5 V, C_{Ln} = 1.0 µF, C_{IN} = 1.0 µF, I_{OUT} = 100 mA

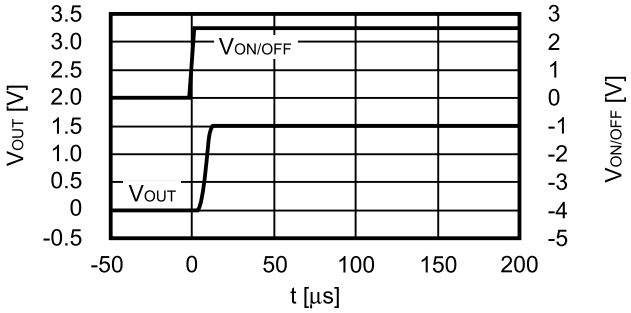

V_{OUT} = 3.0 V
V_{IN} = 4.0 V, C_{Ln} = 1.0 µF, C_{IN} = 1.0 µF, I_{OUT} = 100 mA

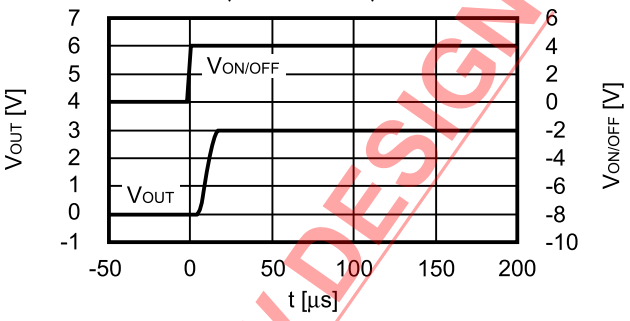

V_{OUT} = 5.0 V
V_{IN} = 6.0 V, C_{Ln} = 1.0 µF, C_{IN} = 1.0 µF, I_{OUT} = 100 mA

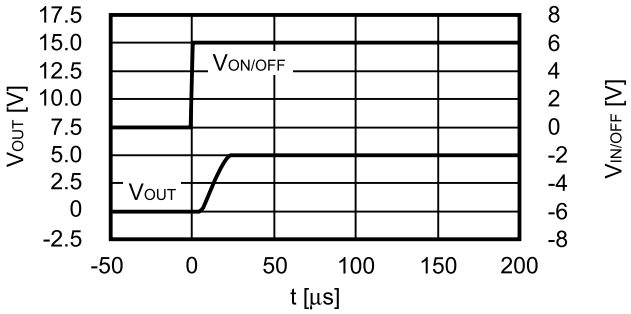

4. Output Capacitance vs. Discharge Time Characteristics (Ta = 25°C)

S-1711 Series A / B type (with discharge shunt function)

V_{IN} = V_{OUT} + 1.0 V, I_{OUT} = no load,
$V_{ON/OFF}$ = V_{OUT} + 1.0 V → V_{SS}, t_f = 1 µs

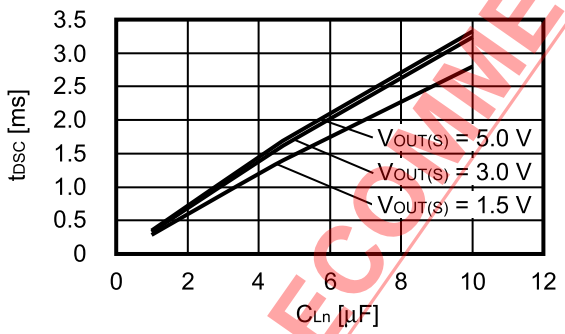

Figure 27

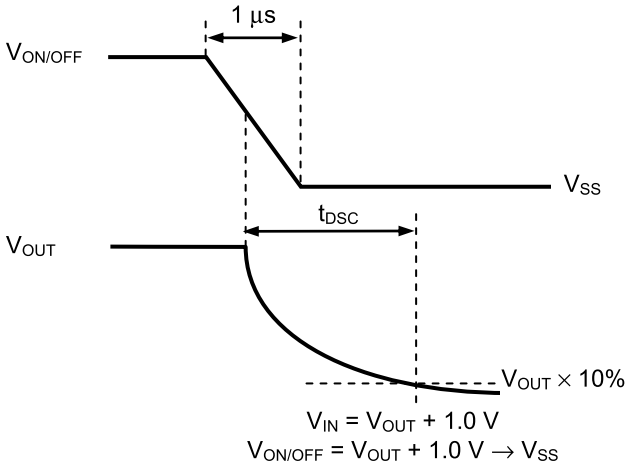

Figure 28 Measurement Condition of Discharge Time

Remark C_{Ln}: Output capacitor set to the VOUTn pin externally (n = 1, 2)

NOT RECOMMENDED FOR NEW DESIGN

■ Marking Specifications

1. SNT-6A

Top view

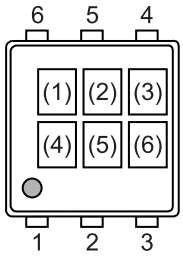

(1) to (3) : Product code (Refer to **Product name vs. Product code**)
(4) to (6) : Lot number

Product name vs. Product code

(a) S-1711 Series A type

Product Name	Product code		
	(1)	(2)	(3)
S-1711A1515-I6T1U	Q	R	A
S-1711A1518-I6T1U	Q	Q	D
S-1711A1526-I6T1U	Q	V	T
S-1711A1528-I6T1U	Q	V	I
S-1711A152J-I6T1U	Q	Q	I
S-1711A1533-I6T1U	Q	V	W
S-1711A1815-I6T1U	Q	R	Y
S-1711A1818-I6T1U	Q	V	F
S-1711A1827-I6T1U	Q	R	P
S-1711A182H-I6T1U	Q	R	Q
S-1711A1828-I6T1U	Q	R	5
S-1711A182J-I6T1U	Q	V	S
S-1711A1829-I6T1U	Q	V	L
S-1711A1830-I6T1U	Q	V	H
S-1711A1833-I6T1U	Q	R	7
S-1711A1J28-I6T1U	Q	R	Z
S-1711A2332-I6T1U	Q	V	U
S-1711A2333-I6T1U	Q	V	V
S-1711A2424-I6T1U	Q	R	R
S-1711A2425-I6T1U	Q	R	S
S-1711A2515-I6T1U	Q	R	L
S-1711A2518-I6T1U	Q	R	E
S-1711A2525-I6T1U	Q	R	T
S-1711A2528-I6T1U	Q	V	D
S-1711A2533-I6T1U	Q	V	E
S-1711A2626-I6T1U	Q	V	M
S-1711A2628-I6T1U	Q	V	7
S-1711A2629-I6T1U	Q	V	8

Product Name	Product code		
	(1)	(2)	(3)
S-1711A2630-I6T1U	Q	V	9
S-1711A2815-I6T1U	Q	R	U
S-1711A2818-I6T1U	Q	R	V
S-1711A2828-I6T1U	Q	R	B
S-1711A2829-I6T1U	Q	R	2
S-1711A2830-I6T1U	Q	R	D
S-1711A2831-I6T1U	Q	Q	A
S-1711A2832-I6T1U	Q	R	F
S-1711A2833-I6T1U	Q	R	G
S-1711A2J15-I6T1U	Q	Q	F
S-1711A2J18-I6T1U	Q	Q	G
S-1711A2J2J-I6T1U	Q	R	H
S-1711A2J33-I6T1U	Q	Q	C
S-1711A2929-I6T1U	Q	R	J
S-1711A3015-I6T1U	Q	R	X
S-1711A3018-I6T1U	Q	R	W
S-1711A3025-I6T1U	Q	R	M
S-1711A3028-I6T1U	Q	V	Z
S-1711A3030-I6T1U	Q	R	K
S-1711A3033-I6T1U	Q	R	N
S-1711A3128-I6T1U	Q	Q	B
S-1711A3318-I6T1U	Q	V	R
S-1711A3333-I6T1U	Q	R	3
S-1711A3348-I6T1U	Q	V	J
S-1711A3350-I6T1U	Q	V	2
S-1711A3434-I6T1U	Q	V	6
S-1711A5025-I6T1U	Q	V	3
S-1711A5030-I6T1U	Q	R	8

NOT RECOMMENDED FOR NEW DESIGN

(b) S-1711 Series B type

Product Name	Product code		
	(1)	(2)	(3)
S-1711B1518-I6T1U	Q	U	H
S-1711B1528-I6T1U	Q	Z	C
S-1711B1825-I6T1U	Q	U	K
S-1711B1828-I6T1U	Q	U	B
S-1711B1833-I6T1U	Q	U	J
S-1711B2518-I6T1U	Q	U	A
S-1711B2528-I6T1U	Q	U	C
S-1711B2815-I6T1U	Q	U	D
S-1711B2818-I6T1U	Q	U	E
S-1711B2828-I6T1U	Q	U	F
S-1711B2833-I6T1U	Q	Z	D
S-1711B3033-I6T1U	Q	Z	A
S-1711B3333-I6T1U	Q	Z	B

(c) S-1711 Series C type

Product Name	Product code		
	(1)	(2)	(3)
S-1711C1515-I6T1U	Q	S	A
S-1711C1815-I6T1U	Q	S	B
S-1711C1827-I6T1U	Q	S	C
S-1711C182H-I6T1U	Q	S	D
S-1711C1828-I6T1U	Q	S	Z
S-1711C1J28-I6T1U	Q	S	E
S-1711C2424-I6T1U	Q	S	F
S-1711C2425-I6T1U	Q	S	G
S-1711C2515-I6T1U	Q	S	H
S-1711C2518-I6T1U	Q	S	I
S-1711C2525-I6T1U	Q	S	J
S-1711C2815-I6T1U	Q	S	K
S-1711C2818-I6T1U	Q	S	L
S-1711C2828-I6T1U	Q	S	M
S-1711C2829-I6T1U	Q	S	N
S-1711C2830-I6T1U	Q	S	O
S-1711C2833-I6T1U	Q	S	P
S-1711C2J2J-I6T1U	Q	S	Q
S-1711C2929-I6T1U	Q	S	R
S-1711C3015-I6T1U	Q	S	S
S-1711C3018-I6T1U	Q	S	T
S-1711C3025-I6T1U	Q	S	U
S-1711C3030-I6T1U	Q	S	V
S-1711C3033-I6T1U	Q	S	W

(d) S-1711 Series D type

Product Name	Product code		
	(1)	(2)	(3)
S-1711D1828-I6T1U	Q	U	N
S-1711D1925-I6T1U	Q	U	R
S-1711D2518-I6T1U	Q	U	O
S-1711D2528-I6T1U	Q	U	P
S-1711D252J-I6T1U	Q	U	Y
S-1711D2815-I6T1U	Q	U	Q
S-1711D2J2J-I6T1U	Q	U	U

(e) S-1711 Series E type

Product Name	Product code		
	(1)	(2)	(3)
S-1711E2818-I6T1U	Q	T	A

(f) S-1711 Series F type

Product Name	Product code		
	(1)	(2)	(3)
S-1711F2818-I6T1U	Q	T	F

(g) S-1711 Series G type

Product Name	Product code		
	(1)	(2)	(3)
S-1711G2830-I6T1U	Q	T	K

NOT RECOMMENDED FOR NEW DESIGN

2. SOT-23-6

Top view

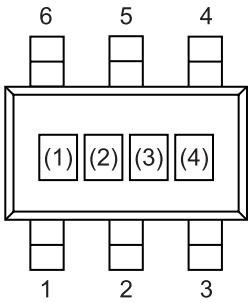

(1) to (3): Product code (Refer to **Product name vs. Product code**)
(4): Lot number

Product name vs. Product code

(a) S-1711 Series A type

Product Name	Product code		
	(1)	(2)	(3)
S-1711A1515-M6T1x	Q	R	A
S-1711A1528-M6T1x	Q	V	I
S-1711A1529-M6T1x	Q	V	K
S-1711A1533-M6T1x	Q	V	W
S-1711A1815-M6T1x	Q	R	Y
S-1711A1818-M6T1x	Q	V	F
S-1711A1825-M6T1x	Q	R	4
S-1711A1827-M6T1x	Q	R	P
S-1711A182H-M6T1x	Q	R	Q
S-1711A1828-M6T1x	Q	R	5
S-1711A182J-M6T1x	Q	V	S
S-1711A1829-M6T1x	Q	V	L
S-1711A1830-M6T1x	Q	V	H
S-1711A1832-M6T1x	Q	V	N
S-1711A1833-M6T1x	Q	R	7
S-1711A1J28-M6T1x	Q	R	Z
S-1711A2045-M6T1x	Q	V	G
S-1711A2424-M6T1x	Q	R	R
S-1711A2425-M6T1x	Q	R	S
S-1711A2515-M6T1x	Q	R	L
S-1711A2518-M6T1x	Q	R	E
S-1711A2522-M6T1x	Q	V	O
S-1711A2525-M6T1x	Q	R	T
S-1711A2528-M6T1x	Q	V	D
S-1711A2529-M6T1x	Q	R	9
S-1711A2533-M6T1x	Q	V	E
S-1711A2618-M6T1x	Q	V	4

Product Name	Product code		
	(1)	(2)	(3)
S-1711A2718-M6T1x	Q	V	5
S-1711A2815-M6T1x	Q	R	U
S-1711A2818-M6T1x	Q	R	V
S-1711A2819-M6T1x	Q	V	P
S-1711A2825-M6T1x	Q	V	C
S-1711A2828-M6T1x	Q	R	B
S-1711A2829-M6T1x	Q	R	2
S-1711A2830-M6T1x	Q	R	D
S-1711A2832-M6T1x	Q	R	F
S-1711A2833-M6T1x	Q	R	G
S-1711A2J2J-M6T1x	Q	R	H
S-1711A2J30-M6T1x	Q	V	X
S-1711A2929-M6T1x	Q	R	J
S-1711A2933-M6T1x	Q	V	Y
S-1711A3015-M6T1x	Q	R	X
S-1711A3018-M6T1x	Q	R	W
S-1711A3025-M6T1x	Q	R	M
S-1711A3030-M6T1x	Q	R	K
S-1711A3033-M6T1x	Q	R	N
S-1711A3325-M6T1x	Q	V	A
S-1711A3328-M6T1x	Q	V	B
S-1711A3330-M6T1x	Q	R	6
S-1711A3333-M6T1x	Q	R	3
S-1711A3348-M6T1x	Q	V	J
S-1711A4020-M6T1x	Q	V	Q
S-1711A5025-M6T1x	Q	V	3

Remark 1. x: G or U
2. Please select products of environmental code = U for Sn 100%, halogen-free products.

NOT RECOMMENDED FOR NEW DESIGN

(b) S-1711 Series B type

Product Name	Product code		
	(1)	(2)	(3)
S-1711B1518-M6T1x	Q	U	H
S-1711B1529-M6T1x	Q	U	I
S-1711B1825-M6T1x	Q	U	K
S-1711B1828-M6T1x	Q	U	B
S-1711B1832-M6T1x	Q	U	M
S-1711B1833-M6T1x	Q	U	J
S-1711B2515-M6T1x	Q	U	G
S-1711B2518-M6T1x	Q	U	A
S-1711B2528-M6T1x	Q	U	C
S-1711B2618-M6T1x	Q	Z	G
S-1711B2718-M6T1x	Q	Z	H
S-1711B2815-M6T1x	Q	U	D
S-1711B2818-M6T1x	Q	U	E
S-1711B2825-M6T1x	Q	U	L
S-1711B2828-M6T1x	Q	U	F
S-1711B3030-M6T1x	Q	Z	I
S-1711B3033-M6T1x	Q	Z	A
S-1711B3036-M6T1x	Q	Z	F
S-1711B3333-M6T1x	Q	Z	B

(c) S-1711 Series C type

Product Name	Product code		
	(1)	(2)	(3)
S-1711C1515-M6T1x	Q	S	A
S-1711C1815-M6T1x	Q	S	B
S-1711C1825-M6T1x	Q	S	2
S-1711C1827-M6T1x	Q	S	C
S-1711C182H-M6T1x	Q	S	D
S-1711C1832-M6T1x	Q	S	X
S-1711C1J28-M6T1x	Q	S	E
S-1711C2424-M6T1x	Q	S	F
S-1711C2425-M6T1x	Q	S	G
S-1711C2515-M6T1x	Q	S	H
S-1711C2518-M6T1x	Q	S	I
S-1711C2525-M6T1x	Q	S	J
S-1711C2815-M6T1x	Q	S	K
S-1711C2818-M6T1x	Q	S	L
S-1711C2828-M6T1x	Q	S	M
S-1711C2829-M6T1x	Q	S	N
S-1711C2830-M6T1x	Q	S	O
S-1711C2833-M6T1x	Q	S	P
S-1711C2J2J-M6T1x	Q	S	Q
S-1711C2929-M6T1x	Q	S	R
S-1711C3015-M6T1x	Q	S	S
S-1711C3018-M6T1x	Q	S	T
S-1711C3025-M6T1x	Q	S	U
S-1711C3030-M6T1x	Q	S	V
S-1711C3033-M6T1x	Q	S	W
S-1711C3131-M6T1x	Q	S	Y

(d) S-1711 Series D type

Product Name	Product code		
	(1)	(2)	(3)
S-1711D1825-M6T1x	Q	U	S
S-1711D1826-M6T1x	Q	U	W
S-1711D1828-M6T1x	Q	U	N
S-1711D1832-M6T1x	Q	U	T
S-1711D1925-M6T1x	Q	U	R
S-1711D2518-M6T1x	Q	U	O
S-1711D2528-M6T1x	Q	U	P
S-1711D2629-M6T1x	Q	U	X
S-1711D2815-M6T1x	Q	U	Q
S-1711D4230-M6T1x	Q	U	V

(e) S-1711 Series E type

Product Name	Product code		
	(1)	(2)	(3)
S-1711E1833-M6T1x	Q	T	C
S-1711E2818-M6T1x	Q	T	A
S-1711E3333-M6T1x	Q	T	B

(f) S-1711 Series H type

Product Name	Product code		
	(1)	(2)	(3)
S-1711H2518-M6T1x	Q	T	P

NOT RECOMMENDED FOR NEW DESIGN

Remark 1. x: G or U
2. Please select products of environmental code = U for Sn 100%, halogen-free products.

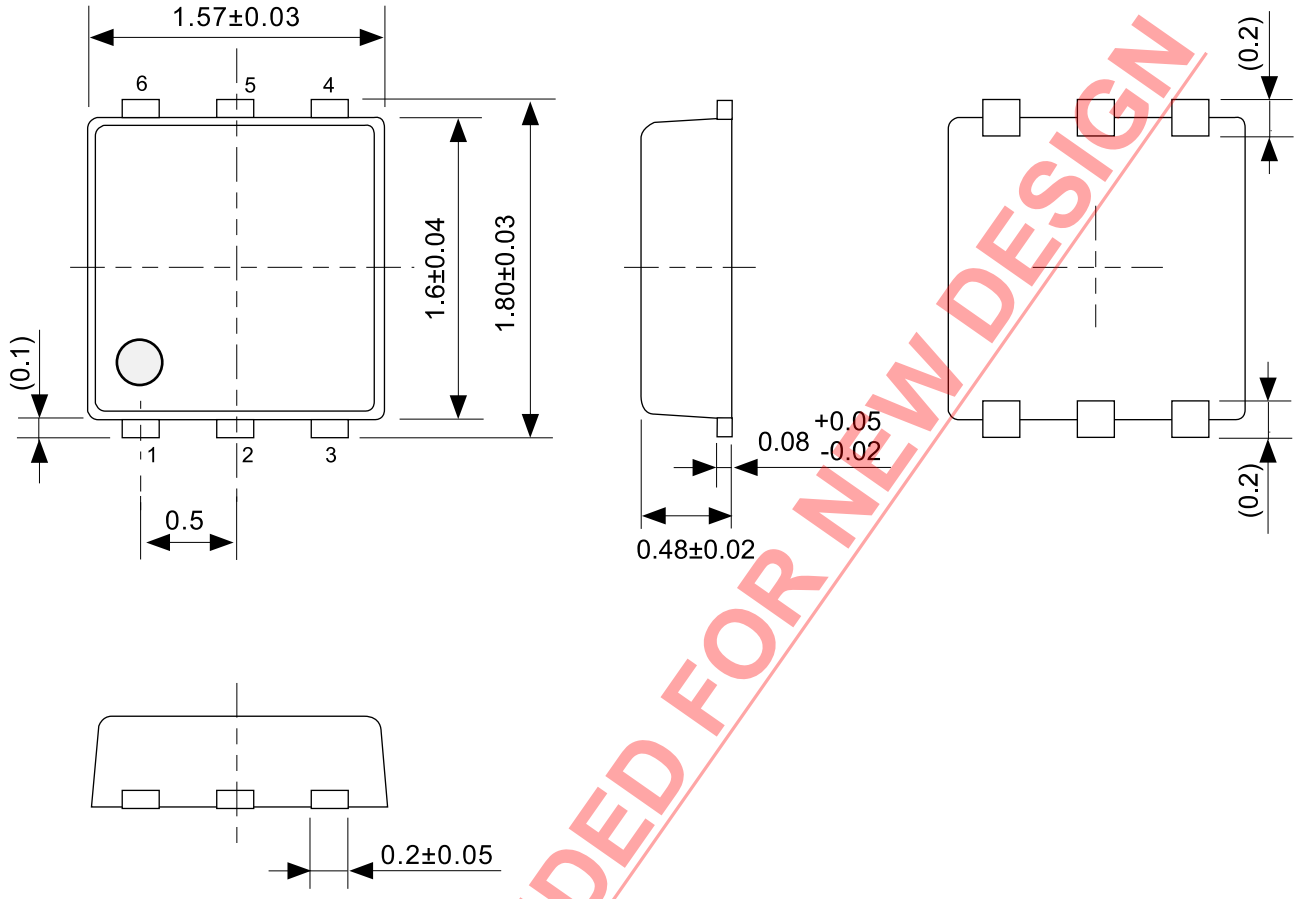

NOT RECOMMENDED FOR NEW DESIGN

No. PG006-A-P-SD-2.1

TITLE	SNT-6A-A-PKG Dimensions
No.	PG006-A-P-SD-2.1
ANGLE	
UNIT	mm

ABLIC Inc.

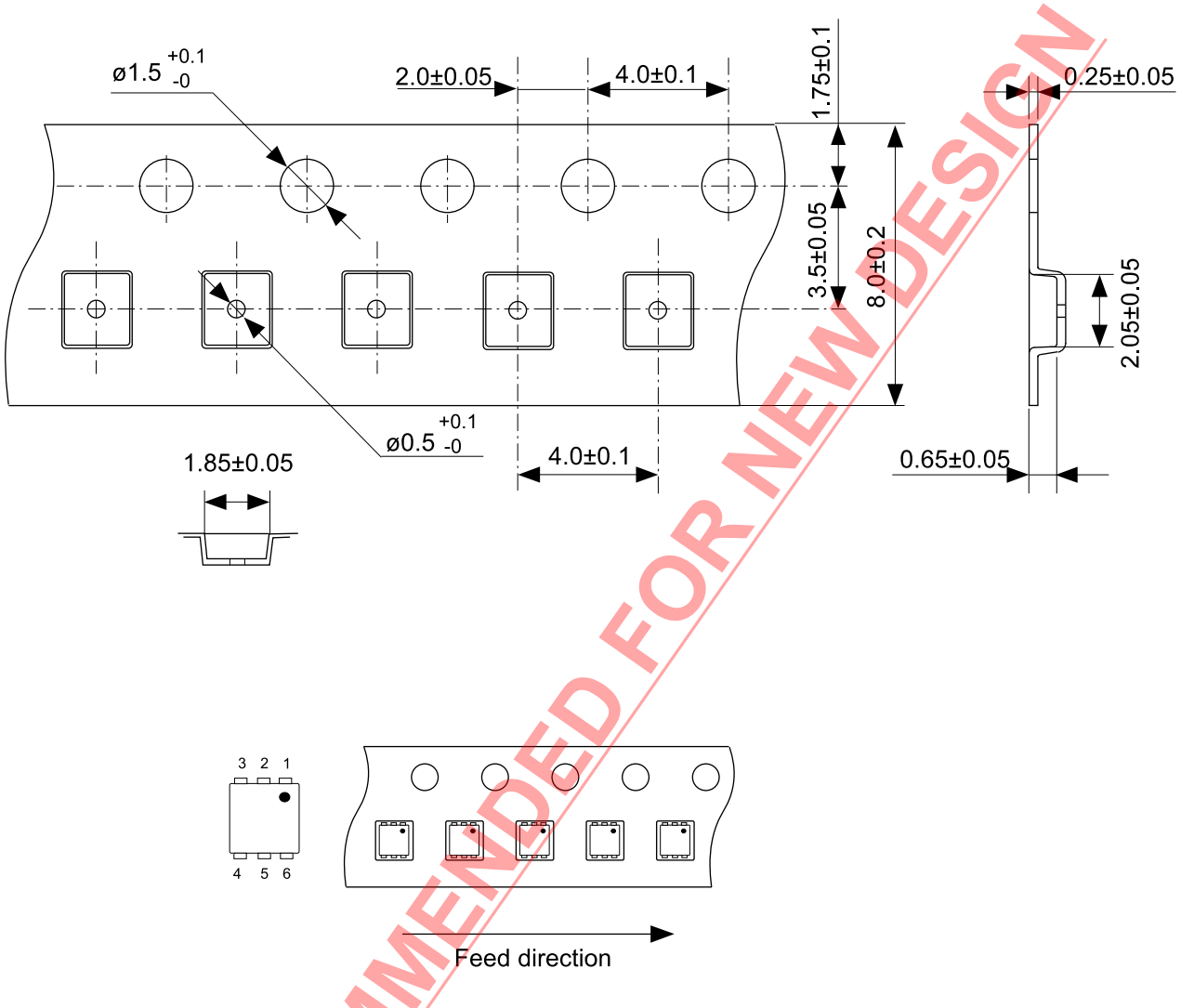

NOT RECOMMENDED FOR NEW DESIGN

No. PG006-A-C-SD-2.0

TITLE	SNT-6A-A-Carrier Tape
No.	PG006-A-C-SD-2.0
ANGLE	
UNIT	mm

ABLIC Inc.

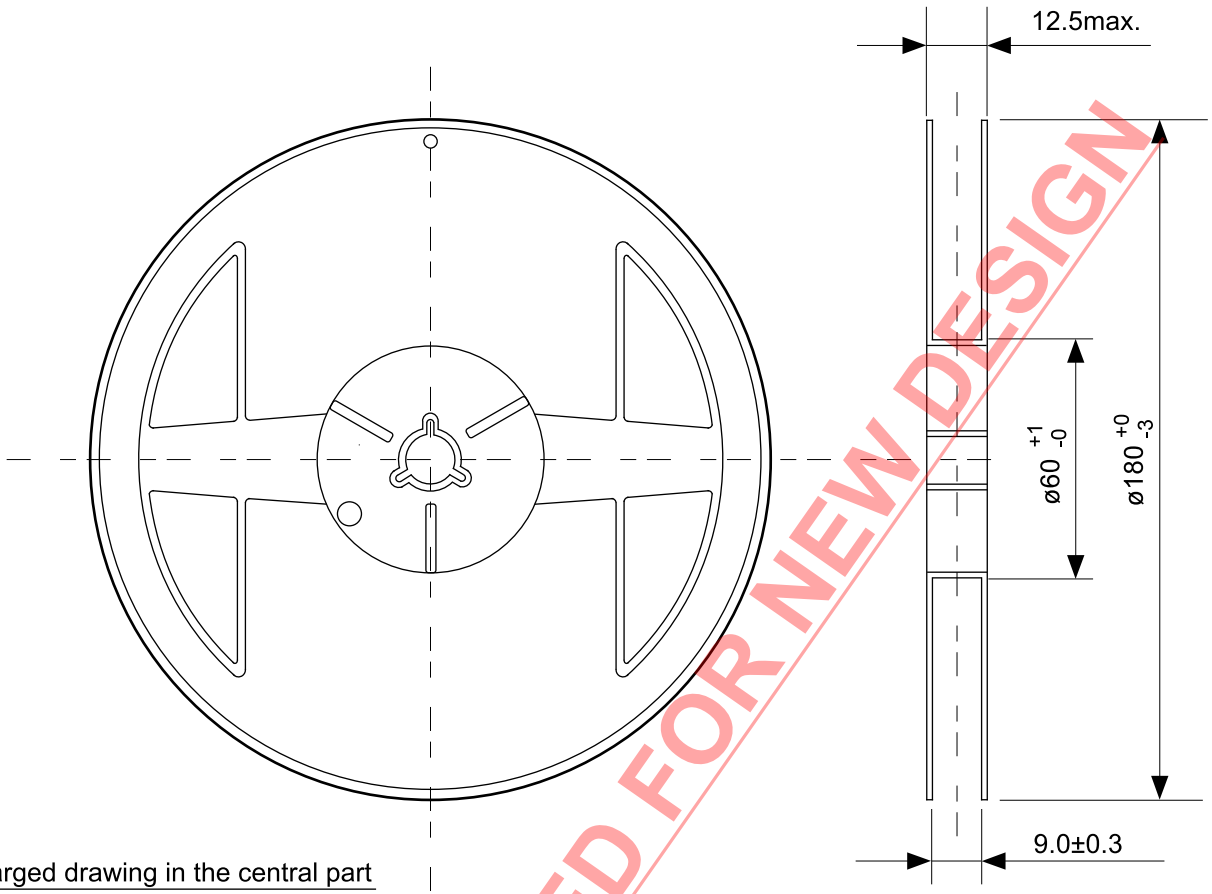

Enlarged drawing in the central part

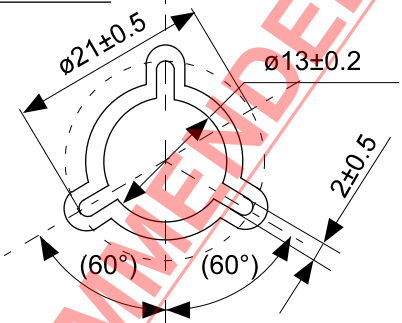

No. PG006-A-R-SD-1.0

NOT RECOMMENDED FOR NEW DESIGN

TITLE	SNT-6A-A-Reel		
No.	PG006-A-R-SD-1.0		
ANGLE		QTY.	5,000
UNIT	mm		
ABLIC Inc.			

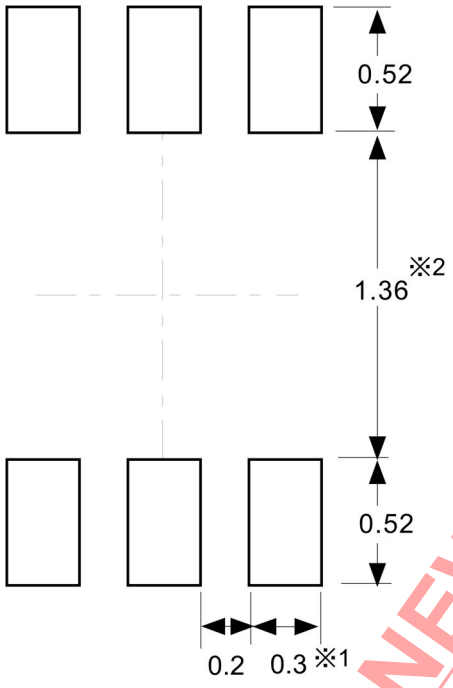

※1. ランドパターンの幅に注意してください (0.25 mm min. / 0.30 mm typ.)。
※2. パッケージ中央にランドパターンを広げないでください (1.30 mm ~ 1.40 mm)。

注意
1. **パッケージのモールド樹脂下にシルク印刷やハンダ印刷などしないでください。**
2. **パッケージ下の配線上のソルダーレジストなどの厚みをランドパターン表面から0.03 mm 以下にしてください。**
3. **マスク開口サイズと開口位置はランドパターンと合わせてください。**
4. **詳細は〝SNTパッケージ活用の手引き〟を参照してください。**

※1. Pay attention to the land pattern width (0.25 mm min. / 0.30 mm typ.).
※2. Do not widen the land pattern to the center of the package (1.30 mm ~ 1.40 mm).

Caution
1. **Do not do silkscreen printing and solder printing under the mold resin of the package.**
2. **The thickness of the solder resist on the wire pattern under the package should be 0.03 mm or less from the land pattern surface.**
3. **Match the mask aperture size and aperture position with the land pattern.**
4. **Refer to "SNT Package User's Guide" for details.**

※1. 请注意焊盘模式的宽度 (0.25 mm min. / 0.30 mm typ.)。
※2. 请勿向封装中间扩展焊盘模式 (1.30 mm ~ 1.40 mm)。

注意
1. **请勿在树脂型封装的下面印刷丝网、焊锡。**
2. **在封装下、布线上的阻焊膜厚度 (从焊盘模式表面起) 请控制在 0.03 mm 以下。**
3. **钢网的开口尺寸和开口位置请与焊盘模式对齐。**
4. **详细内容请参阅 "SNT 封装的应用指南"。**

NOT RECOMMENDED FOR NEW DESIGN

No. PG006-A-L-SD-4.1

TITLE	SNT-6A-A -Land Recommendation
No.	PG006-A-L-SD-4.1
ANGLE	
UNIT	mm

ABLIC Inc.

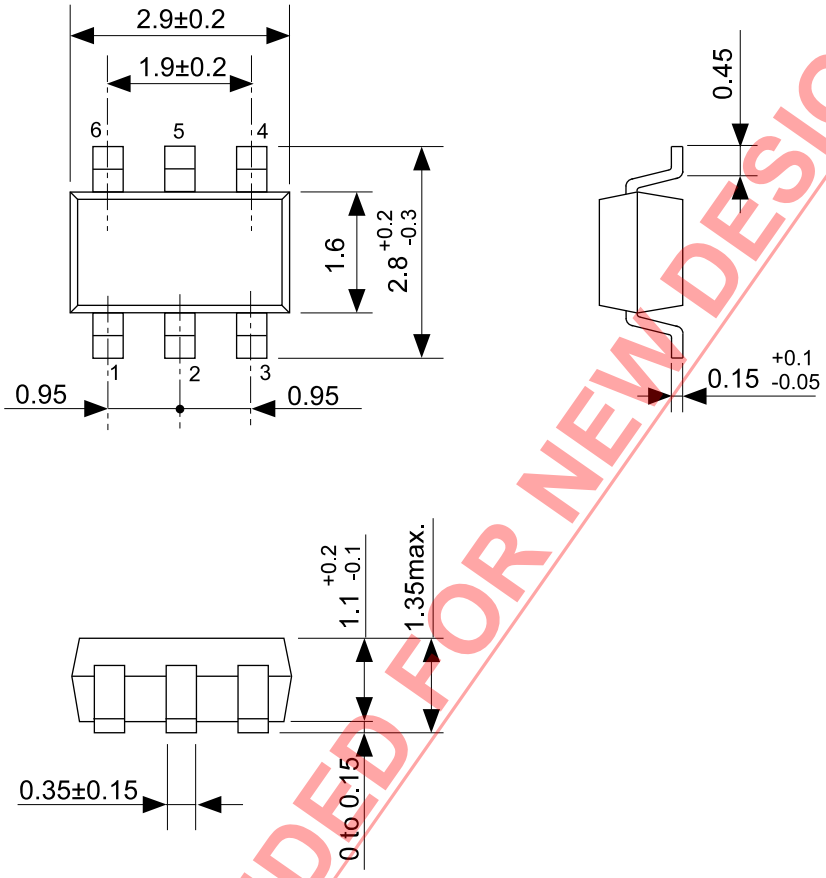

NOT RECOMMENDED FOR NEW DESIGN

No. MP006-A-P-SD-2.1

TITLE	SOT236-A-PKG Dimensions
No.	MP006-A-P-SD-2.1
ANGLE	
UNIT	mm

ABLIC Inc.

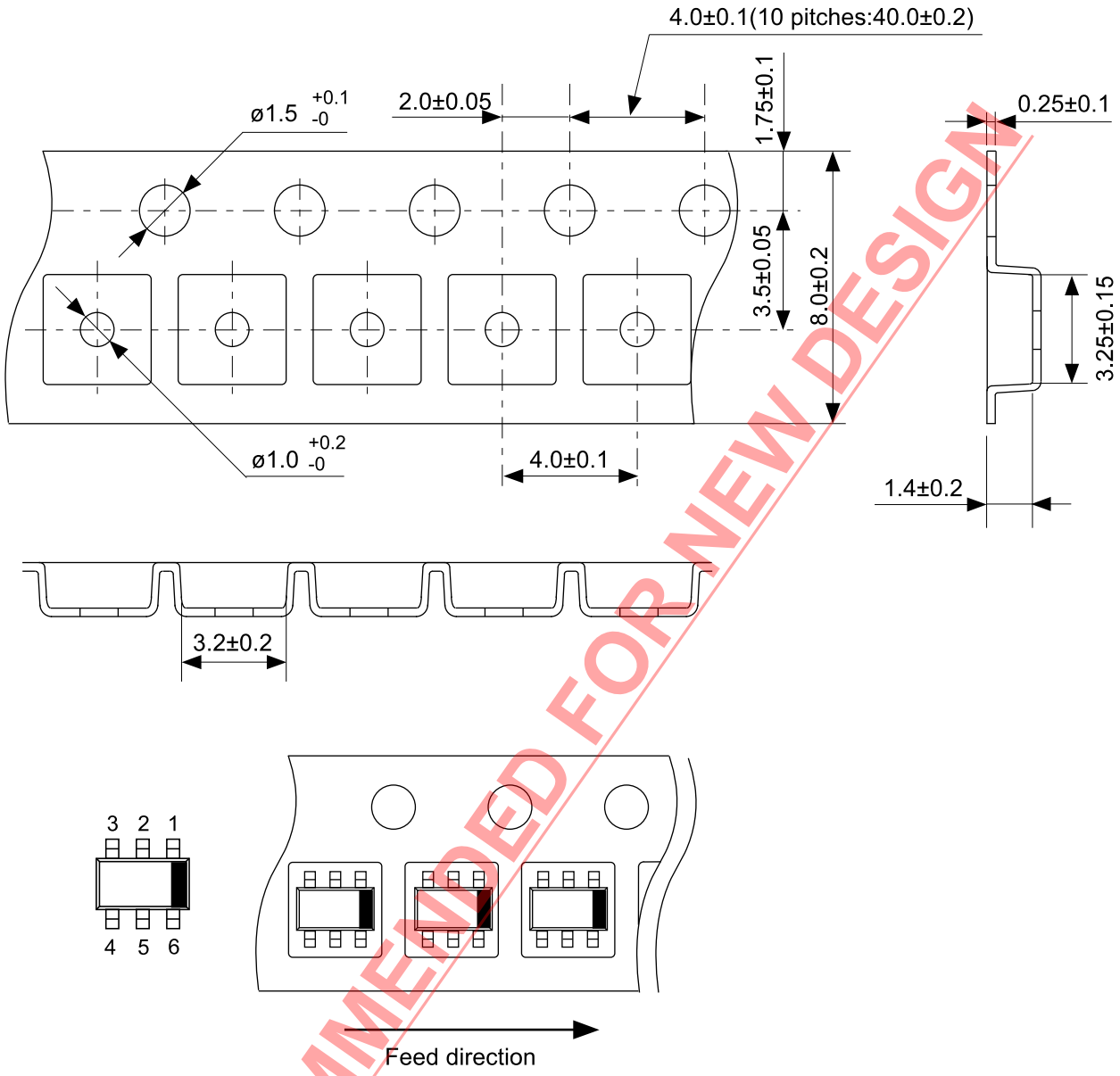

NOT RECOMMENDED FOR NEW DESIGN

No. MP006-A-C-SD-3.1

TITLE	SOT236-A-Carrier Tape
No.	MP006-A-C-SD-3.1
ANGLE	
UNIT	mm
ABLIC Inc.	

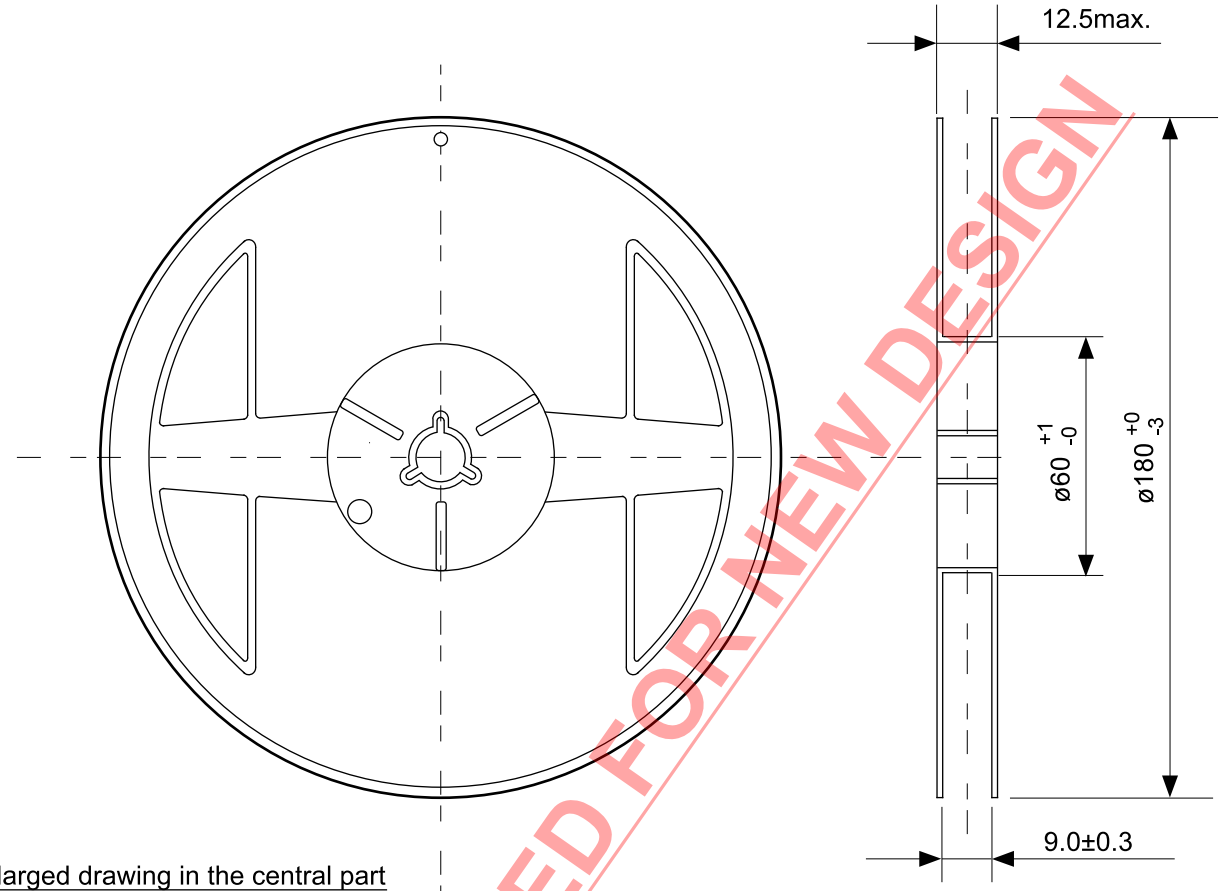

Enlarged drawing in the central part

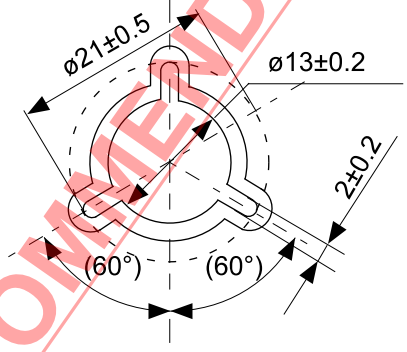

NOT RECOMMENDED FOR NEW DESIGN

No. MP006-A-R-SD-2.1

TITLE	SOT236-A-Reel		
No.	MP006-A-R-SD-2.1		
ANGLE		QTY	3,000
UNIT	mm		
ABLIC Inc.			

Disclaimers (Handling Precautions)

1. All the information described herein (product data, specifications, figures, tables, programs, algorithms and application circuit examples, etc.) is current as of publishing date of this document and is subject to change without notice.
2. The circuit examples and the usages described herein are for reference only, and do not guarantee the success of any specific mass-production design.
   ABLIC Inc. is not liable for any losses, damages, claims or demands caused by the reasons other than the products described herein (hereinafter "the products") or infringement of third-party intellectual property right and any other right due to the use of the information described herein.
3. ABLIC Inc. is not liable for any losses, damages, claims or demands caused by the incorrect information described herein.
4. Be careful to use the products within their ranges described herein. Pay special attention for use to the absolute maximum ratings, operation voltage range and electrical characteristics, etc.
   ABLIC Inc. is not liable for any losses, damages, claims or demands caused by failures and / or accidents, etc. due to the use of the products outside their specified ranges.
5. Before using the products, confirm their applications, and the laws and regulations of the region or country where they are used and verify suitability, safety and other factors for the intended use.
6. When exporting the products, comply with the Foreign Exchange and Foreign Trade Act and all other export-related laws, and follow the required procedures.
7. The products are strictly prohibited from using, providing or exporting for the purposes of the development of weapons of mass destruction or military use. ABLIC Inc. is not liable for any losses, damages, claims or demands caused by any provision or export to the person or entity who intends to develop, manufacture, use or store nuclear, biological or chemical weapons or missiles, or use any other military purposes.
8. The products are not designed to be used as part of any device or equipment that may affect the human body, human life, or assets (such as medical equipment, disaster prevention systems, security systems, combustion control systems, infrastructure control systems, vehicle equipment, traffic systems, in-vehicle equipment, aviation equipment, aerospace equipment, and nuclear-related equipment), excluding when specified for in-vehicle use or other uses by ABLIC, Inc. Do not apply the products to the above listed devices and equipments.
   ABLIC Inc. is not liable for any losses, damages, claims or demands caused by unauthorized or unspecified use of the products.
9. In general, semiconductor products may fail or malfunction with some probability. The user of the products should therefore take responsibility to give thorough consideration to safety design including redundancy, fire spread prevention measures, and malfunction prevention to prevent accidents causing injury or death, fires and social damage, etc. that may ensue from the products' failure or malfunction.
   The entire system in which the products are used must be sufficiently evaluated and judged whether the products are allowed to apply for the system on customer's own responsibility.
10. The products are not designed to be radiation-proof. The necessary radiation measures should be taken in the product design by the customer depending on the intended use.
11. The products do not affect human health under normal use. However, they contain chemical substances and heavy metals and should therefore not be put in the mouth. The fracture surfaces of wafers and chips may be sharp. Be careful when handling these with the bare hands to prevent injuries, etc.
12. When disposing of the products, comply with the laws and ordinances of the country or region where they are used.
13. The information described herein contains copyright information and know-how of ABLIC Inc. The information described herein does not convey any license under any intellectual property rights or any other rights belonging to ABLIC Inc. or a third party. Reproduction or copying of the information from this document or any part of this document described herein for the purpose of disclosing it to a third-party is strictly prohibited without the express permission of ABLIC Inc.
14. For more details on the information described herein or any other questions, please contact ABLIC Inc.'s sales representative.
15. This Disclaimers have been delivered in a text using the Japanese language, which text, despite any translations into the English language and the Chinese language, shall be controlling.

NOT RECOMMENDED FOR NEW DESIGN

ENTEGRECİ

Bu belge www.entegreci.com üzerinden sunulmaktadır.

Elektronik komponent tedarikinde Entegreci

Entegreci, Eskişehir merkezli, Türkiye geneline satış yapan bir elektronik komponent mağazasıdır. Entegreler (IC), mikrodenetleyiciler, transistörler, diyotlar, pasif elemanlar, konnektörler, modüller ve geliştirme kartları tek adetten seri üretim adetlerine kadar satılır. Ürün sayfalarında güncel stok durumunu, fiyatı ve datasheet bağlantısını bulabilirsiniz.

Parça koduyla arama

Üretici parça numarasını yazın; stok ve fiyatı hemen görün.

www.entegreci.com

Ürün kategorileri

Entegreden kapasitöre tüm elektronik komponent kategorileri.

Kategorilere göz atın

Üreticiler

Aradığınız üreticinin ürünlerini tek sayfada inceleyin.

Üreticileri görün

Toplu alım ve teklif

Listede olmayan ya da yüksek adetli parçalar için teklif isteyin.

Teklif isteyin

www.entegreci.com | **destek@entegreci.com** | **0850 305 90 34**

Entegreci is an online electronic components store based in Türkiye. Search by manufacturer part number to see stock, prices and datasheets for integrated circuits, microcontrollers, transistors, passive components and connectors, or request a quote for parts that are not listed.

Bu sayfa Entegreci tarafından eklenmiştir. Belgenin önceki sayfaları asıl yayıncısına aittir ve içeriği değiştirilmemiştir; en güncel sürüm için belgenin yayıncısına başvurun.