© ABLIC Inc., 2007-2015

The S-1721 Series, developed using the CMOS technology, is a 2-channel positive voltage regulator IC which has the low dropout voltage, the high-accuracy output voltage and the low output current consumption of 150 mA.
Users are able to use a small ceramic capacitor of 1.0 μF for this IC. This IC includes two regulator circuits in the package SOT-23-6 or super-small SNT-6A.
S-1721 Series has much lower current consumption than the S-1711 Series, this IC is ideal for mobile devices.

■ Features

- Output voltage: 1.2 V to 5.0 V, selectable in 0.05 V step
- Input voltage: 1.7 V to 6.5 V
- Output voltage accuracy: ±1.0%
- Dropout voltage: 130 mV typ. (3.0 V output product, I_{OUT} = 100 mA)
- Current consumption: During operation: 25 μA typ., 45 μA max. (3.0 V output product, per circuit)
  During power-off: 0.1 μA typ., 1.0 μA max.
- Output current: Possible to output 150 mA ($V_{IN} \geq V_{OUT(S)}$ + 1.0 V)*1 (per circuit)
- Input and output capacitors: A ceramic capacitor of 1.0 μF or more can be used.
- Ripple rejection: 80 dB typ. (products having the output under 1.8 V, f = 1.0 kHz)
- Built-in overcurrent protection circuit: limits overcurrent of output transistor.
- Built-in ON/OFF circuit: Ensures long battery life.
- Pull-up or pull-down resistor is selectable.
- Operation temperature range: Ta = −40°C to +85°C
- Lead-free, Sn 100%, halogen-free*2

***1.** Attention should be paid to the power dissipation of the package when the output current is large.
***2.** Refer to "■ **Product Name Structure**" for details.

■ Applications

- Constant-voltage power supply for cellular phone
- Constant-voltage power supply for battery-powered device

■ Packages

- SNT-6A
- SOT-23-6

NOT RECOMMENDED FOR NEW DESIGN

■ Block Diagrams

1. S-1721 Series A type

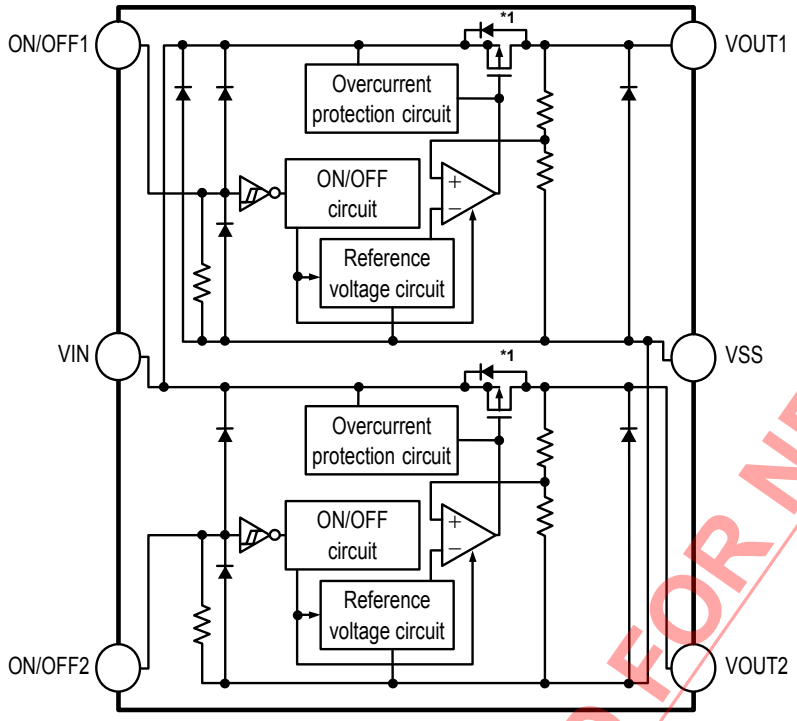

Function		Status
ON/OFF logic	1ch	Active “H”
	2ch	Active “H”
Pull-up resistor	1ch	None
	2ch	None
Pull-down resistor	1ch	Available
	2ch	Available

*1. Parasitic diode

Figure 1

2. S-1721 Series B type

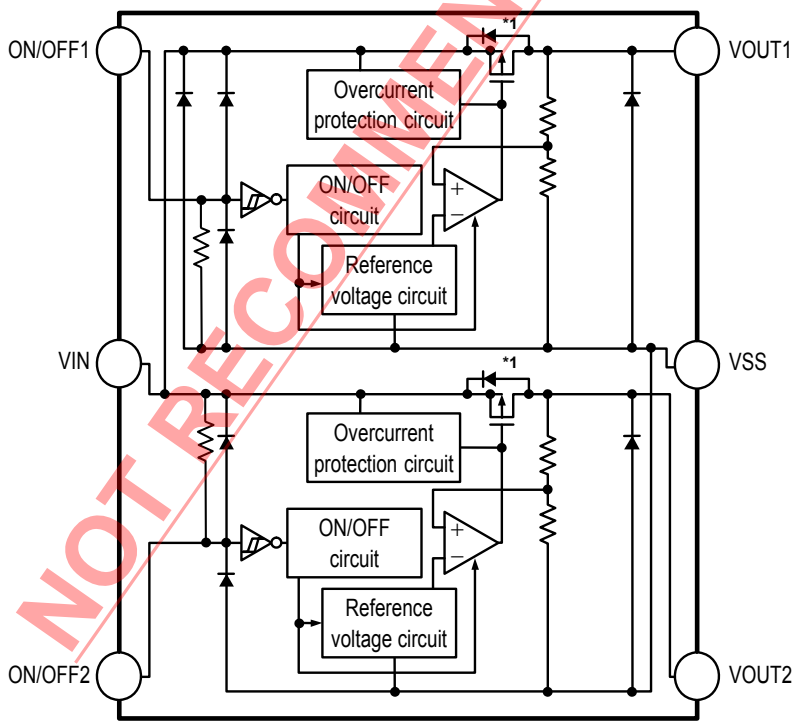

Function		Status
ON/OFF logic	1ch	Active “H”
	2ch	Active “L”
Pull-up resistor	1ch	None
	2ch	Available
Pull-down resistor	1ch	Available
	2ch	None

*1. Parasitic diode

Figure 2

NOT RECOMMENDED FOR NEW DESIGN

3. S-1721 Series C type

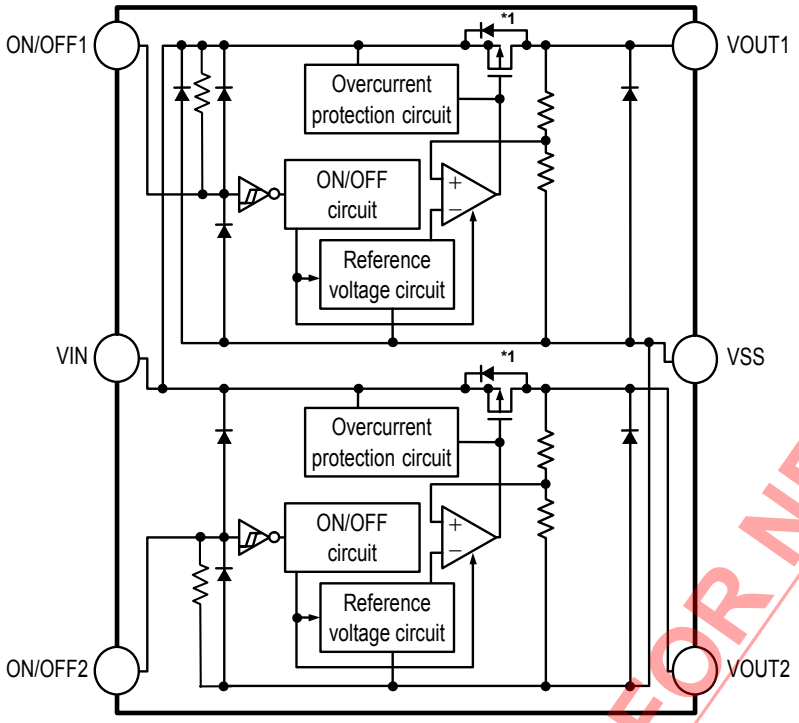

Function		Status
ON/OFF logic	1ch	Active “L”
	2ch	Active “H”
Pull-up resistor	1ch	Available
	2ch	None
Pull-down resistor	1ch	None
	2ch	Available

*1. Parasitic diode

Figure 3

4. S-1721 Series D type

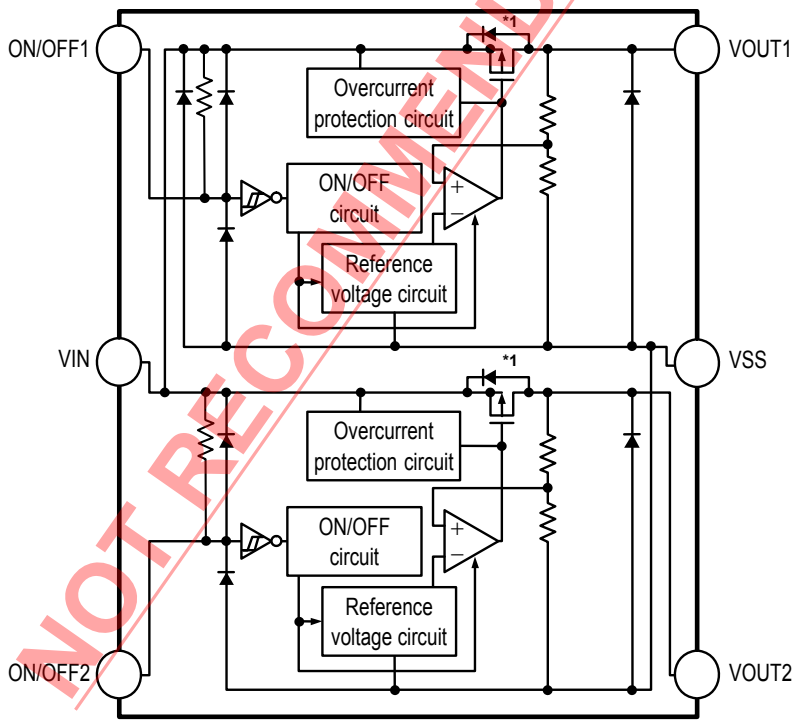

Function		Status
ON/OFF logic	1ch	Active “L”
	2ch	Active “L”
Pull-up resistor	1ch	Available
	2ch	Available
Pull-down resistor	1ch	None
	2ch	None

*1. Parasitic diode

Figure 4

NOT RECOMMENDED FOR NEW DESIGN

5. S-1721 Series E type

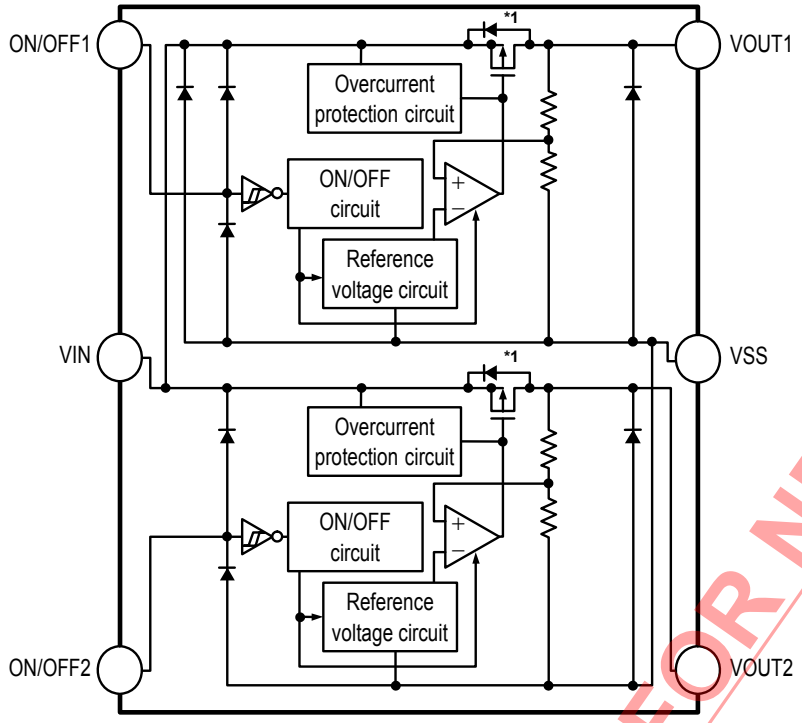

Function		Status
ON/OFF logic	1ch	Active “H”
	2ch	Active “H”
Pull-up resistor	1ch	None
	2ch	None
Pull-down resistor	1ch	None
	2ch	None

*1. Parasitic diode

Figure 5

6. S-1721 Series F type

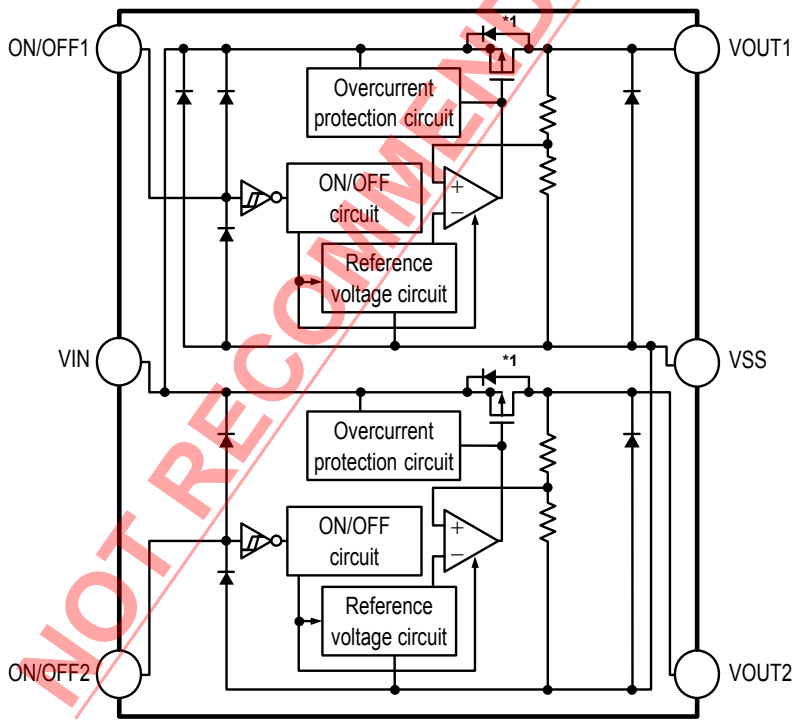

Function		Status
ON/OFF logic	1ch	Active “H”
	2ch	Active “L”
Pull-up resistor	1ch	None
	2ch	None
Pull-down resistor	1ch	None
	2ch	None

*1. Parasitic diode

Figure 6

NOT RECOMMENDED FOR NEW DESIGN

7. S-1721 Series G type

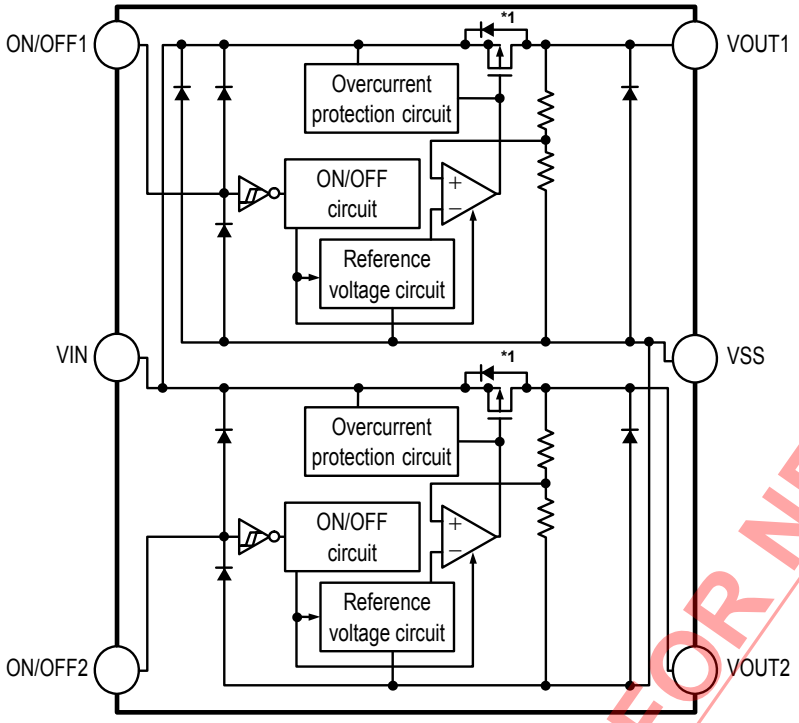

Function		Status
ON/OFF logic	1ch	Active "L"
	2ch	Active "H"
Pull-up resistor	1ch	None
	2ch	None
Pull-down resistor	1ch	None
	2ch	None

*1. Parasitic diode

Figure 7

8. S-1721 Series H type

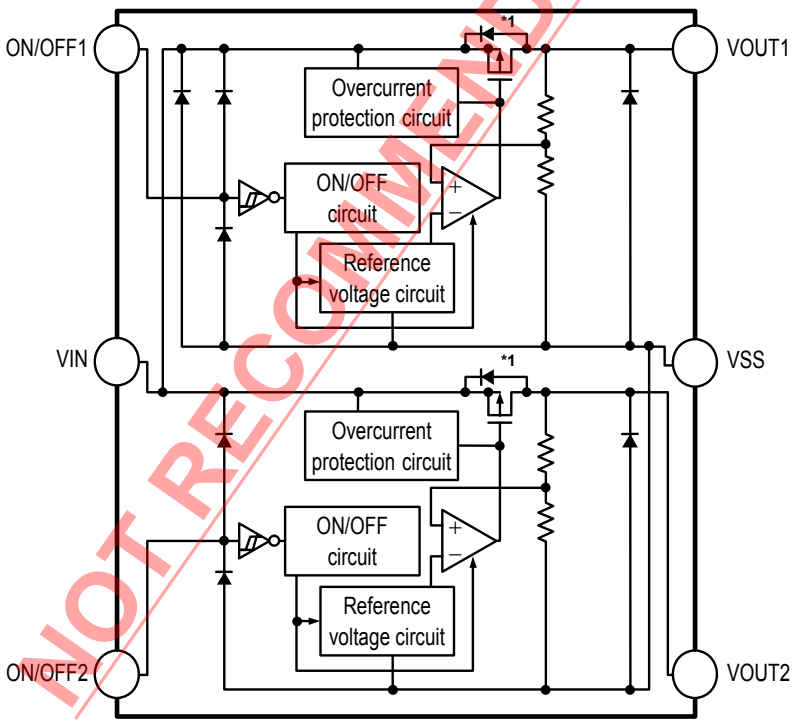

Function		Status
ON/OFF logic	1ch	Active "L"
	2ch	Active "L"
Pull-up resistor	1ch	None
	2ch	None
Pull-down resistor	1ch	None
	2ch	None

*1. Parasitic diode

Figure 8

NOT RECOMMENDED FOR NEW DESIGN

■ Product Name Structure

Users can select the product type, output voltage, and package type for the S-1721 Series. Refer to "**1. Product name**" regarding the contents of product name, "**2. Function list of product type**" regarding the product type, "**3. Package**" regarding the package drawings and "**4. Product name list**" regarding details of product name.

1. Product name

1. 1 SNT-6A

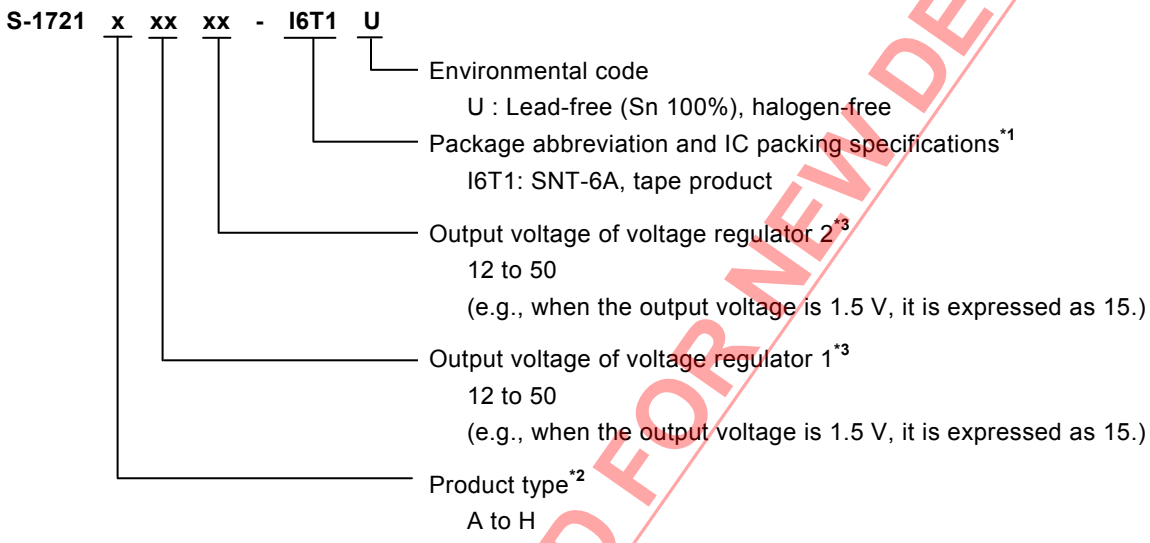

***1.** Refer to the tape drawing.
***2.** Refer to "**2. Function list of product type**".
***3.** If you request the product which has 0.05 V step, contact our sales office.

1. 2 SOT-23-6

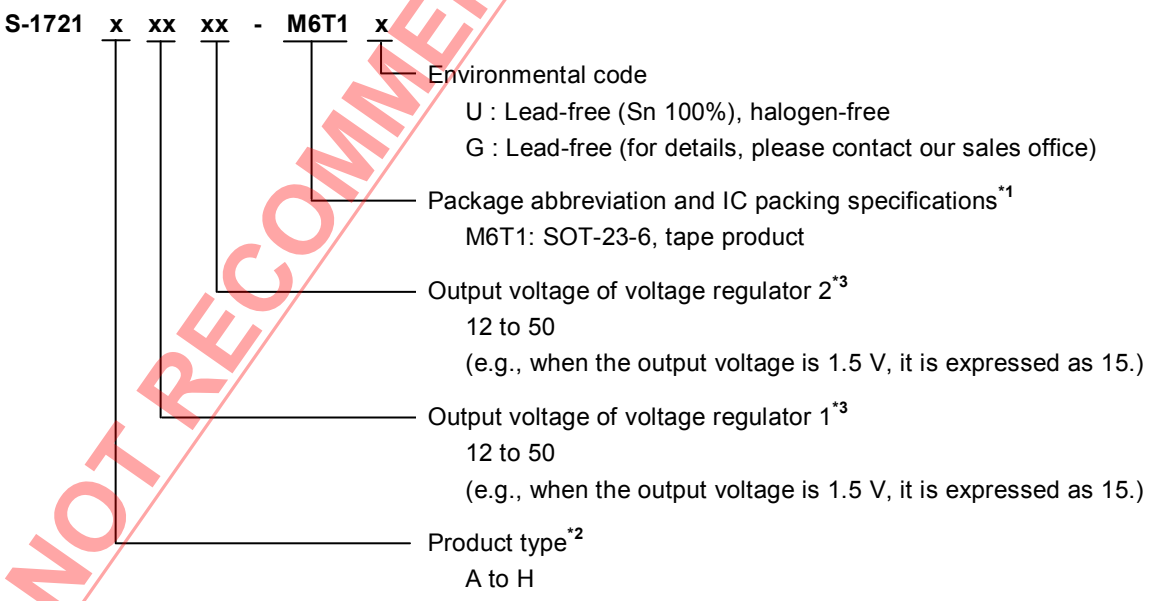

***1.** Refer to the tape drawing.
***2.** Refer to "**2. Function list of product type**".
***3.** If you request the product which has 0.05 V step, contact our sales office.

NOT RECOMMENDED FOR NEW DESIGN

2. Function list of product type

Table 1

Product Type	ON/OFF Logic	Pull-up Resistor	Pull-down Resistor
A type	1ch Active "H" 2ch Active "H"	1ch None 2ch None	1ch Available 2ch Available
B type	1ch Active "H" 2ch Active "L"	1ch None 2ch Available	1ch Available 2ch None
C type	1ch Active "L" 2ch Active "H"	1ch Available 2ch None	1ch None 2ch Available
D type	1ch Active "L" 2ch Active "L"	1ch Available 2ch Available	1ch None 2ch None
E type	1ch Active "H" 2ch Active "H"	1ch None 2ch None	1ch None 2ch None
F type	1ch Active "H" 2ch Active "L"	1ch None 2ch None	1ch None 2ch None
G type	1ch Active "L" 2ch Active "H"	1ch None 2ch None	1ch None 2ch None
H type	1ch Active "L" 2ch Active "L"	1ch None 2ch None	1ch None 2ch None

3. Package

Package Name	Drawing Code			
	Package	Tape	Reel	Land
SNT-6A	PG006-A-P-SD	PG006-A-C-SD	PG006-A-R-SD	PG006-A-L-SD
SOT-23-6	MP006-A-P-SD	MP006-A-C-SD	MP006-A-R-SD	–

NOT RECOMMENDED FOR NEW DESIGN

4. Product name list

4.1 S-1721 series A type

ON/OFF logic : 1ch : Active “H”, 2ch : Active “H”
Pull-up resistor : 1ch : None, 2ch : None
Pull-down resistor : 1ch : Available, 2ch : Available

Table 2 (1 / 2)

Voltage Regulator 1 Output Voltage	Voltage Regulator 2 Output Voltage	SNT-6A	SOT-23-6
1.2 V ±15 mV	1.2 V ±15 mV	S-1721A1212-I6T1U	S-1721A1212-M6T1x
1.2 V ±15 mV	1.5 V ±1.0%	S-1721A1215-I6T1U	S-1721A1215-M6T1x
1.2 V ±15 mV	1.8 V ±1.0%	S-1721A1218-I6T1U	–
1.2 V ±15mV	2.5 V ±1.0%	S-1721A1225-I6T1U	–
1.2 V ±15 mV	2.6 V ±1.0%	S-1721A1226-I6T1U	–
1.2 V ±15 mV	2.8 V ±1.0%	S-1721A1228-I6T1U	S-1721A1228-M6T1x
1.2 V ±15 mV	2.85 V ±1.0%	S-1721A122J-I6T1U	–
1.2 V ±15 mV	3.0 V ±1.0%	S-1721A1230-I6T1U	–
1.2 V ±15 mV	3.3 V ±1.0%	S-1721A1233-I6T1U	S-1721A1233-M6T1x
1.25 V ±15 mV	1.8 V ±1.0%	S-1721A1C18-I6T1U	–
1.3 V ±15 mV	2.8 V ±1.0%	–	S-1721A1328-M6T1x
1.3 V ±15 mV	3.0 V ±1.0%	–	S-1721A1330-M6T1x
1.5 V ±1.0%	1.2 V ±15 mV	S-1721A1512-I6T1U	–
1.5 V ±1.0%	1.3 V ±15 mV	S-1721A1513-I6T1U	–
1.5 V ±1.0%	1.5 V ±1.0%	S-1721A1515-I6T1U	–
1.5 V ±1.0%	1.8 V ±1.0%	S-1721A1518-I6T1U	–
1.5 V ±1.0%	2.5 V ±1.0%	S-1721A1525-I6T1U	–
1.5 V ±1.0%	2.8 V ±1.0%	–	S-1721A1528-M6T1x
1.5 V ±1.0%	2.85 V ±1.0%	S-1721A152J-I6T1U	–
1.5 V ±1.0%	3.0 V ±1.0%	S-1721A1530-I6T1U	S-1721A1530-M6T1x
1.5 V ±1.0%	3.3 V ±1.0%	S-1721A1533-I6T1U	S-1721A1533-M6T1x
1.8 V ±1.0%	1.2 V ±15 mV	S-1721A1812-I6T1U	–
1.8 V ±1.0%	1.5 V ±1.0%	S-1721A1815-I6T1U	–
1.8 V ±1.0%	1.8 V ±1.0%	S-1721A1818-I6T1U	–
1.8 V ±1.0%	2.5 V ±1.0%	S-1721A1825-I6T1U	S-1721A1825-M6T1x
1.8 V ±1.0%	2.6 V ±1.0%	S-1721A1826-I6T1U	–
1.8 V ±1.0%	2.8 V ±1.0%	S-1721A1828-I6T1U	S-1721A1828-M6T1x
1.8 V ±1.0%	2.9 V ±1.0%	S-1721A1829-I6T1U	–
1.8 V ±1.0%	2.85 V ±1.0%	S-1721A182J-I6T1U	–
1.8 V ±1.0%	3.0 V ±1.0%	S-1721A1830-I6T1U	S-1721A1830-M6T1x
1.8 V ±1.0%	3.3 V ±1.0%	S-1721A1833-I6T1U	S-1721A1833-M6T1x
2.0 V ±1.0%	2.0 V ±1.0%	S-1721A2020-I6T1U	S-1721A2020-M6T1x
2.1 V ±1.0%	2.1 V ±1.0%	S-1721A2121-I6T1U	–
2.5 V ±1.0%	1.2 V ±15 mV	S-1721A2512-I6T1U	–
2.5 V ±1.0%	1.5 V ±1.0%	S-1721A2515-I6T1U	–
2.5 V ±1.0%	1.8 V ±1.0%	S-1721A2518-I6T1U	S-1721A2518-M6T1x

NOT RECOMMENDED FOR NEW DESIGN

Table 2 (2 / 2)

Voltage Regulator 1 Output Voltage	Voltage Regulator 2 Output Voltage	SNT-6A	SOT-23-6
2.5 V ±1.0%	2.5 V ±1.0%	S-1721A2525-I6T1U	–
2.5 V ±1.0%	2.8 V ±1.0%	S-1721A2528-I6T1U	S-1721A2528-M6T1x
2.5 V ±1.0%	2.85 V ±1.0%	S-1721A252J-I6T1U	–
2.5 V ±1.0%	3.0 V ±1.0%	S-1721A2530-I6T1U	–
2.5 V ±1.0%	3.3 V ±1.0%	S-1721A2533-I6T1U	–
2.6 V ±1.0%	1.3 V ±15 mV	S-1721A2613-I6T1U	–
2.8 V ±1.0%	1.2 V ±15 mV	S-1721A2812-I6T1U	S-1721A2812-M6T1x
2.8 V ±1.0%	1.5 V ±1.0%	S-1721A2815-I6T1U	S-1721A2815-M6T1x
2.8 V ±1.0%	1.8 V ±1.0%	S-1721A2818-I6T1U	S-1721A2818-M6T1x
2.8 V ±1.0%	2.5 V ±1.0%	S-1721A2825-I6T1U	–
2.8 V ±1.0%	2.6 V ±1.0%	S-1721A2826-I6T1U	–
2.8 V ±1.0%	2.8 V ±1.0%	S-1721A2828-I6T1U	S-1721A2828-M6T1x
2.8 V ±1.0%	2.85 V ±1.0%	S-1721A282J-I6T1U	–
2.8 V ±1.0%	3.0 V ±1.0%	S-1721A2830-I6T1U	S-1721A2830-M6T1x
2.8 V ±1.0%	3.3 V ±1.0%	S-1721A2833-I6T1U	S-1721A2833-M6T1x
2.85 V ±1.0%	1.2 V ±15 mV	S-1721A2J12-I6T1U	–
2.85 V ±1.0%	1.5 V ±1.0%	S-1721A2J15-I6T1U	–
2.85 V ±1.0%	1.8 V ±1.0%	S-1721A2J18-I6T1U	–
2.85 V ±1.0%	2.85 V ±1.0%	S-1721A2J2J-I6T1U	S-1721A2J2J-M6T1x
2.85 V ±1.0%	3.3 V ±1.0%	S-1721A2J33-I6T1U	–
3.0 V ±1.0%	1.8 V ±1.0%	S-1721A3018-I6T1U	–
3.0 V ±1.0%	2.8 V ±1.0%	S-1721A3028-I6T1U	–
3.0 V ±1.0%	3.0 V ±1.0%	S-1721A3030-I6T1U	–
3.0 V ±1.0%	3.3 V ±1.0%	S-1721A3033-I6T1U	–
3.1 V ±1.0%	1.9 V ±1.0%	S-1721A3119-I6T1U	–
3.3 V ±1.0%	1.2 V ±15 mV	–	S-1721A3312-M6T1x
3.3 V ±1.0%	1.8 V ±1.0%	S-1721A3318-I6T1U	S-1721A3318-M6T1x
3.3 V ±1.0%	2.8 V ±1.0%	–	S-1721A3328-M6T1x
3.3 V ±1.0%	3.0 V ±1.0%	S-1721A3330-I6T1U	–
3.3 V ±1.0%	3.3 V ±1.0%	S-1721A3333-I6T1U	S-1721A3333-M6T1x

Remark 1. Please contact our sales office for products with specifications other than the above.
2. x: G or U
3. Please select products of environmental code = U for Sn 100%, halogen-free products.

NOT RECOMMENDED FOR NEW DESIGN

4.2 S-1721 series B type

ON/OFF logic : 1ch : Active “H”, 2ch : Active “L”
Pull-up resistor : 1ch : None, 2ch : Available
Pull-down resistor : 1ch : Available, 2ch : None

Table 3

Voltage Regulator 1 Output Voltage	Voltage Regulator 2 Output Voltage	SNT-6A	SOT-23-6
1.5 V ±1.0%	1.5 V ±1.0%	S-1721B1515-I6T1U	–
1.5 V ±1.0%	1.8 V ±1.0%	S-1721B1518-I6T1U	–
1.8 V ±1.0%	1.2 V ±15 mV	S-1721B1812-I6T1U	–
1.8 V ±1.0%	1.8 V ±1.0%	S-1721B1818-I6T1U	–
2.8 V ±1.0%	1.8 V ±1.0%	S-1721B2818-I6T1U	–
2.8 V ±1.0%	2.8 V ±1.0%	–	S-1721B2828-M6T1x
2.85 V ±1.0%	2.85 V ±1.0%	S-1721B2J2J-I6T1U	–

4.3 S-1721 series C type

ON/OFF logic : 1ch : Active “L”, 2ch : Active “H”
Pull-up resistor : 1ch : Available, 2ch : None
Pull-down resistor : 1ch : None, 2ch : Available

Table 4

Voltage Regulator 1 Output Voltage	Voltage Regulator 2 Output Voltage	SNT-6A	SOT-23-6
2.85 V ±1.0%	2.85 V ±1.0%	S-1721C2J2J-I6T1U	S-1721C2J2J-M6T1x

4.4 S-1721 series D type

ON/OFF logic : 1ch : Active “L”, 2ch : Active “L”
Pull-up resistor : 1ch : Available, 2ch : Available
Pull-down resistor : 1ch : None, 2ch : None

Table 5

Voltage Regulator 1 Output Voltage	Voltage Regulator 2 Output Voltage	SNT-6A	SOT-23-6
1.8 V ±1.0%	1.8 V ±1.0%	S-1721D1818-I6T1U	–
1.8 V ±1.0%	2.8 V ±1.0%	–	S-1721D1828-M6T1x
3.3 V ±1.0%	1.8 V ±1.0%	S-1721D3318-I6T1U	S-1721D3318-M6T1x

Remark 1. Please contact our sales office for products with specifications other than the above.
2. x: G or U
3. Please select products of environmental code = U for Sn 100%, halogen-free products.

NOT RECOMMENDED FOR NEW DESIGN

4.5 S-1721 series E type

ON/OFF logic : 1ch : Active “H”, 2ch : Active “H”
Pull-up resistor : 1ch : None, 2ch : None
Pull-down resistor : 1ch : None, 2ch : None

Table 6

Voltage Regulator 1 Output Voltage	Voltage Regulator 2 Output Voltage	SNT-6A	SOT-23-6
1.3 V ±15 mV	2.8 V ±1.0%	S-1721E1328-I6T1U	–
1.5 V ±1.0%	2.8 V ±1.0%	S-1721E1528-I6T1U	S-1721E1528-M6T1x
1.8 V ±1.0%	2.5 V ±1.0%	–	S-1721E1825-M6T1x
1.8 V ±1.0%	2.6 V ±1.0%	–	S-1721E1826-M6T1x
1.8 V ±1.0%	2.8 V ±1.0%	S-1721E1828-I6T1U	S-1721E1828-M6T1x
1.8 V ±1.0%	3.0 V ±1.0%	–	S-1721E1830-M6T1x
1.8 V ±1.0%	3.3 V ±1.0%	S-1721E1833-I6T1U	S-1721E1833-M6T1x
2.0 V ±1.0%	2.5 V ±1.0%	–	S-1721E2025-M6T1x
2.5 V ±1.0%	1.8 V ±1.0%	S-1721E2518-I6T1U	–
2.5 V ±1.0%	2.5 V ±1.0%	S-1721E2525-I6T1U	–
2.5 V ±1.0%	3.0 V ±1.0%	S-1721E2530-I6T1U	–
2.8 V ±1.0%	1.3 V ±15 mV	–	S-1721E2813-M6T1x
2.8 V ±1.0%	1.8 V ±1.0%	S-1721E2818-I6T1U	S-1721E2818-M6T1x
2.8 V ±1.0%	3.3 V ±1.0%	S-1721E2833-I6T1U	S-1721E2833-M6T1x
2.85 V ±1.0%	2.5 V ±1.0%	S-1721E2J25-I6T1U	S-1721E2J25-M6T1x
2.85 V ±1.0%	2.85 V ±1.0%	S-1721E2J2J-I6T1U	–
3.0 V ±1.0%	1.2 V ±15 mV	S-1721E3012-I6T1U	–
3.0 V ±1.0%	2.5 V ±1.0%	S-1721E3025-I6T1U	–
3.0 V ±1.0%	3.3 V ±1.0%	S-1721E3033-I6T1U	–
3.3 V ±1.0%	1.2 V ±15 mV	–	S-1721E3312-M6T1x

Remark 1. Please contact our sales office for products with specifications other than the above.
2. x: G or U
3. Please select products of environmental code = U for Sn 100%, halogen-free products.

NOT RECOMMENDED FOR NEW DESIGN

■ Pin Configurations

1. SNT-6A

Top view



Figure 9

Table 7

Pin No.	Symbol	Description
1	ON/OFF2	ON/OFF pin 2
2	VIN	Input voltage pin
3	ON/OFF1	ON/OFF pin 1
4	VSS	GND pin
5	VOUT1	Output voltage pin 1
6	VOUT2	Output voltage pin 2

2. SOT-23-6

Top view

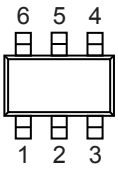

Figure 10

Table 8

Pin No.	Symbol	Description
1	ON/OFF1	ON/OFF pin 1
2	VIN	Input voltage pin
3	ON/OFF2	ON/OFF pin 2
4	VOUT2	Output voltage pin 2
5	VSS	GND pin
6	VOUT1	Output voltage pin 1

NOT RECOMMENDED FOR NEW DESIGN

■ Absolute Maximum Ratings

Table 9

(Ta = 25°C unless otherwise specified)

Item		Symbol	Absolute Maximum Rating	Unit
Input voltage		V_{IN}	V_{SS} − 0.3 to V_{SS} + 7.0	V
		$V_{ON/OFF1, 2}$	V_{SS} − 0.3 to V_{IN} + 0.3	V
Output voltage		$V_{OUT1, 2}$	V_{SS} − 0.3 to V_{IN} + 0.3	V
Power dissipation	SNT-6A	P_D	400*1	mW
	SOT-23-6		650*1	mW
Operating ambient temperature		T_{opr}	−40 to +85	°C
Storage temperature		T_{stg}	−40 to +125	°C

***1.** When mounted on board

[Mounted board]

(1) Board size : 114.3 mm × 76.2 mm × t1.6 mm

(2) Board name : JEDEC STANDARD51-7

Caution The absolute maximum ratings are rated values exceeding which the product could suffer physical damage. These values must therefore not be exceeded under any conditions.

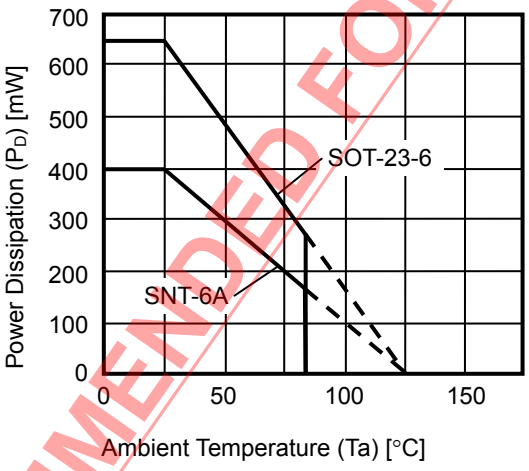

Figure 11 Power Dissipation of Package (when mounted on board)

NOT RECOMMENDED FOR NEW DESIGN

■ Electrical Characteristics

Table 10

Voltage regulator 1 and voltage regulator 2 (per circuit) (Ta = 25°C unless otherwise specified)

Item	Symbol	Conditions		Min.	Typ.	Max.	Unit	Test Circuit
Output voltage*1	$V_{OUT(E)}$	$V_{IN} = V_{OUT(S)} + 1.0$ V, I_{OUT} = 30 mA	1.2 V ≤ $V_{OUT(S)}$ < 1.5 V	$V_{OUT(S)} - 0.015$	$V_{OUT(S)}$	$V_{OUT(S)} + 0.015$	V	2, 3
			1.5 V ≤ $V_{OUT(S)}$ ≤ 5.0 V	$V_{OUT(S)} \times 0.99$	$V_{OUT(S)}$	$V_{OUT(S)} \times 1.01$	V	2, 3
Output current*2	I_{OUT}	$V_{IN} \geq V_{OUT(S)} + 1.0$ V		150*5	—	—	mA	4, 5
Dropout voltage*3	V_{drop}	I_{OUT} = 100 mA	1.2 V ≤ $V_{OUT(S)}$ < 1.3 V	0.50	0.54	0.58	V	2, 3
			1.3 V ≤ $V_{OUT(S)}$ < 1.4 V	0.40	0.44	0.48	V	2, 3
			1.4 V ≤ $V_{OUT(S)}$ < 1.5 V	0.30	0.34	0.39	V	2, 3
			1.5 V ≤ $V_{OUT(S)}$ < 1.7 V	—	0.26	0.39	V	2, 3
			1.7 V ≤ $V_{OUT(S)}$ < 2.0 V	—	0.20	0.35	V	2, 3
			2.0 V ≤ $V_{OUT(S)}$ < 2.8 V	—	0.16	0.24	V	2, 3
			2.8 V ≤ $V_{OUT(S)}$ ≤ 5.0 V	—	0.13	0.23	V	2, 3
Line regulation	$\frac{\Delta V_{OUT1}}{\Delta V_{IN} \bullet V_{OUT}}$	$V_{OUT(S)} + 0.5$ V ≤ V_{IN} ≤ 6.5 V, I_{OUT} = 30 mA		—	0.05	0.2	%/V	2, 3
Load regulation	ΔV_{OUT2}	$V_{IN} = V_{OUT(S)} + 1.0$ V, 100 μA ≤ I_{OUT} ≤ 100 mA		—	20	40	mV	2, 3
Output voltage temperature coefficient*4	$\frac{\Delta V_{OUT}}{\Delta Ta \bullet V_{OUT}}$	$V_{IN} = V_{OUT(S)} + 1.0$ V, I_{OUT} = 30 mA, −40°C ≤ Ta ≤ +85°C		—	±120	—	ppm/°C	2, 3
Current consumption during operation (per circuit)	I_{SS1}	$V_{IN} = V_{OUT(S)} + 1.0$ V, ON/OFF pin = ON, no load	1.2 V ≤ $V_{OUT(S)}$ < 1.5 V	—	35	45	μA	1
		$V_{IN} = V_{OUT(S)} + 1.0$ V, ON/OFF pin = ON, no load	1.5 V ≤ $V_{OUT(S)}$ < 1.8 V	—	32	45	μA	1
		$V_{IN} = V_{OUT(S)} + 1.0$ V, ON/OFF pin = ON, no load	1.8 V ≤ $V_{OUT(S)}$ ≤ 5.0 V	—	25	45	μA	1
Current consumption during shutdown	I_{SS2}	$V_{IN} = V_{OUT(S)} + 1.0$ V, ON/OFF pin = OFF, no load		—	0.1	1.0	μA	1
Input voltage	V_{IN}	—		1.7	—	6.5	V	1
ON/OFF pin input voltage "H"	V_{SH}	$V_{IN} = V_{OUT(S)} + 1.0$ V, R_L = 1.0 kΩ		1.2	—	—	V	6, 7
ON/OFF pin input voltage "L"	V_{SL}	$V_{IN} = V_{OUT(S)} + 1.0$ V, R_L = 1.0 kΩ		—	—	0.3	V	6, 7
ON/OFF pin input current "H"	I_{SH}	V_{IN} = 6.5 V, $V_{ON/OFF}$ = 6.5 V	B (2ch)/C (1ch)/D/E/F/G/H type	−0.1	—	0.1	μA	6, 7
			A/B (1ch)/C (2ch) type	1.0	2.5	4.2	μA	
ON/OFF pin input current "L"	I_{SL}	V_{IN} = 6.5 V, $V_{ON/OFF}$ = 0 V	A/B (1ch)/C (2ch)/E/F/G/H type	−0.1	—	0.1	μA	6, 7
			B (2ch)/C (1ch)/D type	1.0	2.5	4.2	μA	
Ripple rejection	RR	$V_{IN} = V_{OUT(S)} + 1.0$ V, f = 1.0 kHz, ΔV_{rip} = 0.5 Vrms, I_{OUT} = 30 mA	1.2 V ≤ $V_{OUT(S)}$ < 1.8 V	—	80	—	dB	8, 9
			1.8 V ≤ $V_{OUT(S)}$ < 3.1 V	—	75	—	dB	8, 9
			3.1 V ≤ $V_{OUT(S)}$ ≤ 5.0 V	—	70	—	dB	8, 9
Short-circuit current	I_{short}	$V_{IN} = V_{OUT(S)} + 1.0$ V, ON/OFF pin = ON, V_{OUT} = 0 V		—	150	—	mA	4, 5
Shutdown pull-up/pull-down resistor	R_{PD}	—		1.5	2.6	6.5	MΩ	6, 7

NOT RECOMMENDED FOR NEW DESIGN

***1.** $V_{OUT(S)}$: Set output voltage
$V_{OUT(E)}$: Actual output voltage
Output voltage when fixing I_{OUT}(= 30 mA) and inputting $V_{OUT(S)}$ +1.0 V

***2.** The output current at which the output voltage becomes 95% of $V_{OUT(E)}$ after gradually increasing the output current.

***3.** $V_{drop} = V_{IN1} - (V_{OUT3} \times 0.98)$
V_{OUT3} is the output voltage when $V_{IN} = V_{OUT(S)} + 1.0$ V and I_{OUT} = 100 mA.
V_{IN1} is the input voltage at which the output voltage becomes 98% of V_{OUT3} after gradually decreasing the input voltage.

***4.** A change in the temperature of the output voltage [mV/°C] is calculated using the following equation.

$$\frac{\Delta V_{OUT}}{\Delta Ta}[\text{mV/°C}]^{*1} = V_{OUT(S)}[\text{V}]^{*2} \times \frac{\Delta V_{OUT}}{\Delta Ta \bullet V_{OUT}}[\text{ppm/°C}]^{*3} \div 1000$$

***1.** Change in temperature of output voltage
***2.** Set output voltage
***3.** Output voltage temperature coefficient

***5.** The output current can be at least this value.
Due to restrictions on the package power dissipation, this value may not be satisfied. Attention should be paid to the power dissipation of the package when the output current is large.
This specification is guaranteed by design.

NOT RECOMMENDED FOR NEW DESIGN

■ Test Circuit

1.

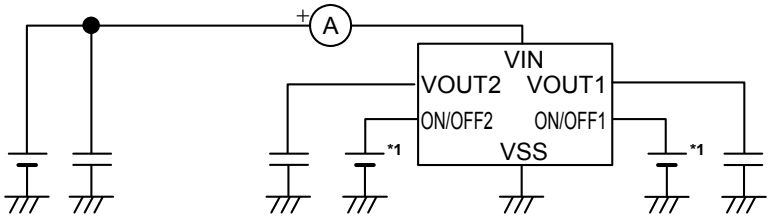

*1. Set to V_{IN} or GND

Figure 12

2.

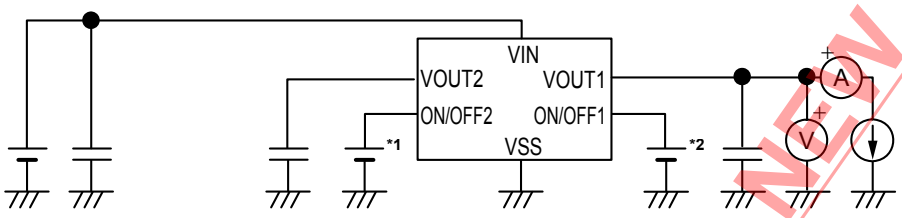

*1. Set to OFF
*2. Set to ON

Figure 13

3.

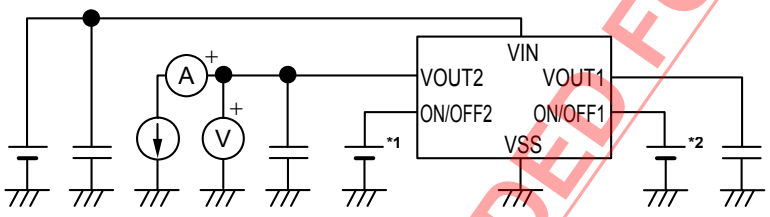

*1. Set to ON
*2. Set to OFF

Figure 14

4.

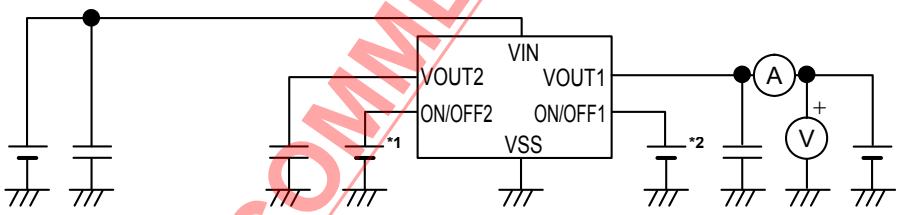

*1. Set to OFF
*2. Set to V_{IN} or GND

Figure 15

5.

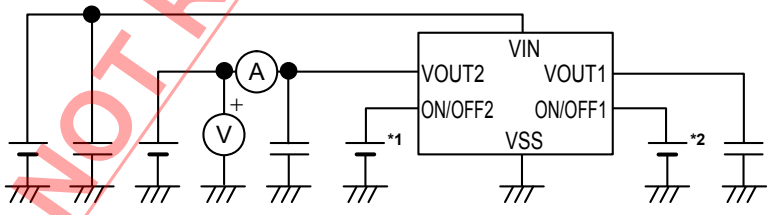

*1. Set to V_{IN} or GND
*2. Set to OFF

Figure 16

NOT RECOMMENDED FOR NEW DESIGN

6.

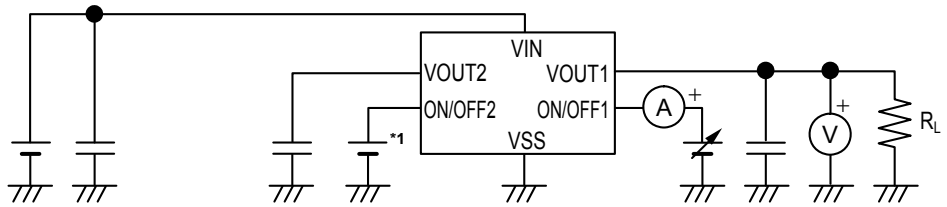

*1. Set to OFF

Figure 17

7.

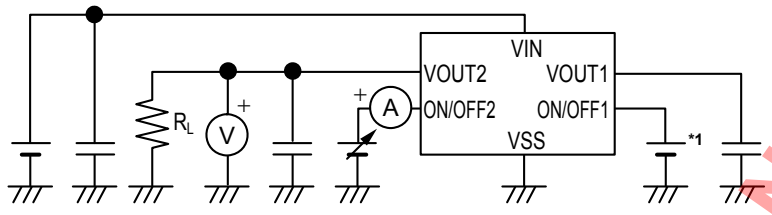

*1. Set to OFF

Figure 18

8.

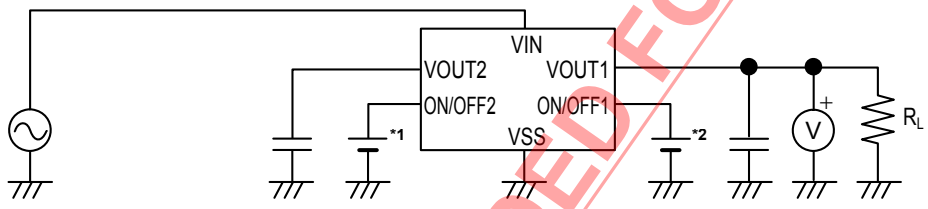

*1. Set to OFF
*2. Set to ON

Figure 19

9.

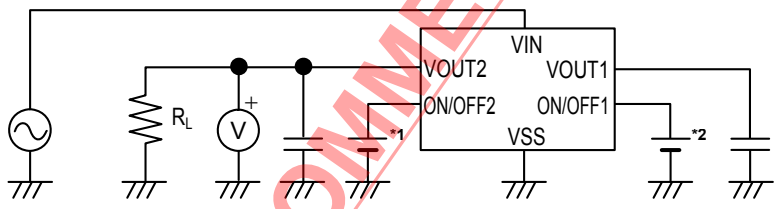

*1. Set to ON
*2. Set to OFF

Figure 20

NOT RECOMMENDED FOR NEW DESIGN

■ Standard Circuit

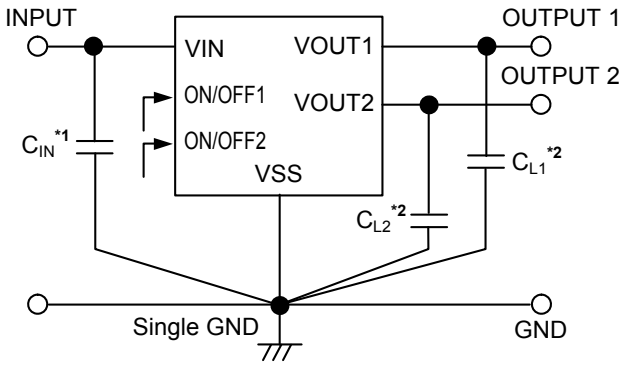

***1.** C_{IN} is a capacitor for stabilizing the input.
***2.** A ceramic capacitor of 1.0 μF or more can be used for C_{L1} and C_{L2}.

Figure 21

Caution The above connection diagram and constant will not guarantee successful operation. Perform thorough evaluation using the actual application to set the constant.

■ Condition of Application

Input capacitor (C_{IN}) : 1.0 μF or more
Output capacitor (C_{L1}, C_{L2}) : 1.0 μF or more

Caution Generally a series regulator may cause oscillation, depending on the selection of external parts. Confirm that no oscillation occurs in the application for which the above capacitors are used.

■ Selection of Input and Output Capacitors (C_{IN}, C_{L1}, C_{L2})

The S-1721 Series requires an output capacitor between the VOUT pin and VSS pin for phase compensation. Operation is stabilized by a ceramic capacitor with an output capacitance of 1.0 μF or more over the entire temperature range. When using an OS capacitor, a tantalum capacitor, or an aluminum electrolytic capacitor, the capacitance must be 1.0 μF or more.

The value of the output overshoot or undershoot transient response varies depending on the value of the output capacitor. The required capacitance of the input capacitor differs depending on the application.

The recommended capacitance for an application is $C_{IN} \geq 1.0$ μF, $C_{L1} \geq 1.0$ μF, $C_{L2} \geq 1.0$ μF; however, when selecting the output capacitor, perform sufficient evaluation, including evaluation of temperature characteristics, on the actual device.

NOT RECOMMENDED FOR NEW DESIGN

■ Explanation of Terms

1. Low dropout voltage regulator

This voltage regulator has the low dropout voltage due to its built-in low on-resistance transistor.

2. Output voltage (V_{OUT})

The accuracy of the output voltage is ensured at ±1.0% under the specified conditions of fixed input voltage[*1], fixed output current, and fixed temperature.

***1.** Differs depending on the product.

Caution **If the above conditions change, the output voltage value may vary and exceed the accuracy range of the output voltage. Refer to the "■ Electrical Characteristics" and "■ Characteristics (Typical Data) (Per Circuit)" for details.**

3. Line regulation $\left(\frac{\Delta V_{OUT1}}{\Delta V_{IN} \bullet V_{OUT}}\right)$

Indicates the dependency of the output voltage on the input voltage. That is, the values show how much the output voltage changes due to a change in the input voltage with the output current remaining unchanged.

4. Load regulation (ΔV_{OUT2})

Indicates the dependency of the output voltage on the output current. That is, the values show how much the output voltage changes due to a change in the output current with the input voltage remaining unchanged.

5. Dropout voltage (V_{drop})

Indicates the difference between input voltage (V_{IN1}) and the output voltage when; decreasing input voltage (V_{IN}) gradually until the output voltage has dropped out to the value of 98% of output voltage (V_{OUT3}), which is at V_{IN} = $V_{OUT(S)}$ + 1.0 V.

$V_{drop} = V_{IN1} - (V_{OUT3} \times 0.98)$

NOT RECOMMENDED FOR NEW DESIGN

6. Output voltage temperature coefficient $\left(\frac{\Delta V_{OUT}}{\Delta Ta \bullet V_{OUT}}\right)$

The shaded area in **Figure 22** is the range where V_{OUT} varies in the operation temperature range when the output voltage temperature coefficient is ±120 ppm/°C.

Example of V_{OUT} = 3.0 V typ. product

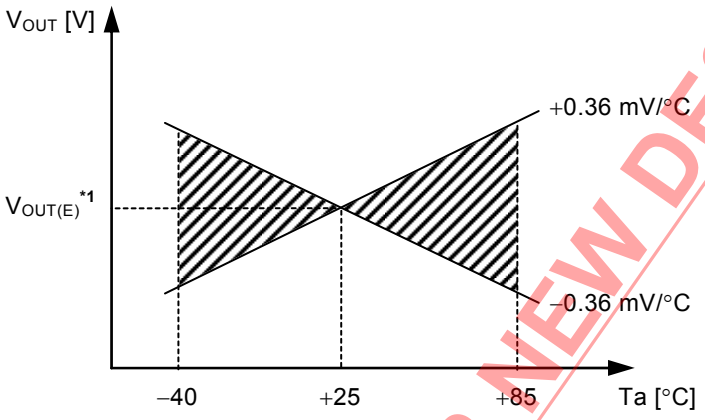

***1.** $V_{OUT(E)}$ is the value of the output voltage measured at Ta = +25°C.

Figure 22

A change in the temperature of the output voltage [mV/°C] is calculated using the following equation.

$$\frac{\Delta V_{OUT}}{\Delta Ta}[mV/°C]^{*1} = V_{OUT(S)}[V]^{*2} \times \frac{\Delta V_{OUT}}{\Delta Ta \bullet V_{OUT}}[ppm/°C]^{*3} \div 1000$$

***1.** Change in temperature of output voltage
***2.** Set output voltage
***3.** Output voltage temperature coefficient

NOT RECOMMENDED FOR NEW DESIGN

■ Operation

1. Basic operation

Figure 23 shows the block diagram of S-1721 Series.

The error amplifier compares the reference voltage (V_{ref}) with feedback voltage (V_{fb}), which is the output voltage resistance-divided by feedback resistors (R_s and R_f). It supplies the gate voltage necessary to maintain the constant output voltage which is not influenced by the input voltage and temperature change, to the output transistor.

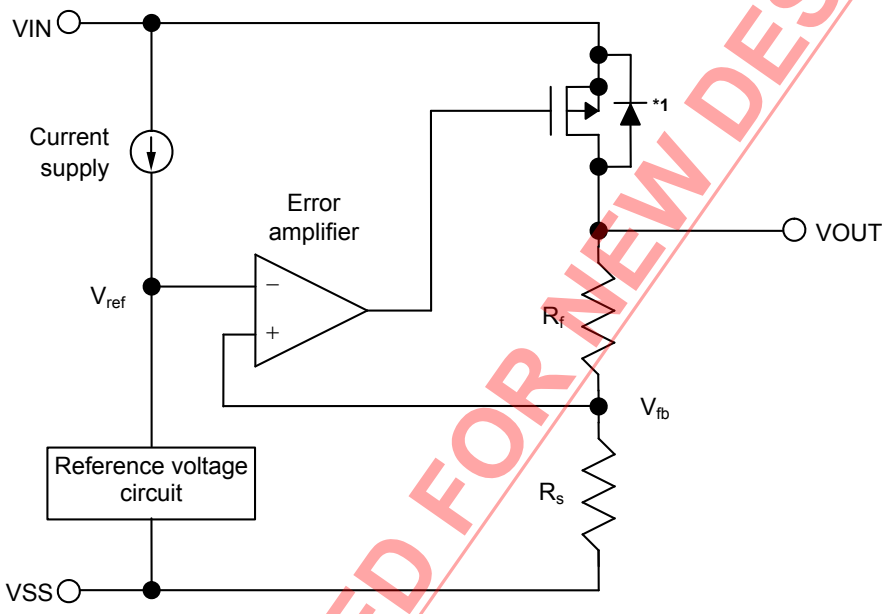

***1**. Parasitic diode

Figure 23

2. Output transistor

In the S-1721 Series, a low on-resistance P-channel MOS FET is used as the output transistor.
Be sure that V_{OUT} does not exceed V_{IN} + 0.3 V to prevent the voltage regulator from being damaged due to reverse current flowing from the VOUT pin through a parasitic diode to the VIN pin, when the potential of V_{OUT} became higher than V_{IN}.

NOT RECOMMENDED FOR NEW DESIGN

3. ON/OFF pin 1 and 2

These pins start and stop the regulator.

When the ON/OFF pin is set to OFF level, the entire internal circuit stops operating, and the built-in P-channel MOS FET output transistor between the VIN pin and VOUT pin is turned off, reducing current consumption significantly. The VOUT pin becomes the V_{SS} level due to the internally divided resistance of several hundreds kΩ between the VOUT pin and the VSS pin.
Note that the current consumption increases when a voltage of 0.3 V to 1.2 V (@Ta = 25°C) is applied to the ON/OFF pin.

The ON/OFF pin is configured as shown in **Figures 24** and **25**. In the S-1721 Series A, B C, and D type, the ON/OFF pin is internally pulled up to VIN pin or pulled down to VSS pin when in the floating status, so the VOUT pin is set to the V_{SS} level.
In the S-1721 Series E, F, G and H type, the ON/OFF pin is not internally pulled up or pulled down, so do not use it in the floating status.
When not using the ON/OFF pin in the S-1721 Series E, F, G, and H type, connect the ON/OFF pin to the VIN pin in the E/F (1ch only), and G (2ch only) type. In the F (2ch only)/G (1ch only) and H type, connect the ON/OFF pin to the VSS pin.

Table 11

Product Type	ON/OFF Pin	Internal Circuits	VOUT Pin Voltage	Current Consumption
A type	1ch "H": ON 2ch "H": ON	Operate Operate	Set value Set value	I_{SS1} I_{SS1}
B type	1ch "H": ON 2ch "L": ON	Operate Operate	Set value Set value	I_{SS1} I_{SS1}
C type	1ch "L": ON 2ch "H": ON	Operate Operate	Set value Set value	I_{SS1} I_{SS1}
D type	1ch "L": ON 2ch "L": ON	Operate Operate	Set value Set value	I_{SS1} I_{SS1}
E type	1ch "L": OFF 2ch "L": OFF	Stop Stop	V_{SS} level V_{SS} level	I_{SS2} I_{SS2}
F type	1ch "L": OFF 2ch "H": OFF	Stop Stop	V_{SS} level V_{SS} level	I_{SS2} I_{SS2}
G type	1ch "H": OFF 2ch "L": OFF	Stop Stop	V_{SS} level V_{SS} level	I_{SS2} I_{SS2}
H type	1ch "H": OFF 2ch "H": OFF	Stop Stop	V_{SS} level V_{SS} level	I_{SS2} I_{SS2}

(1) S-1721 Series A, B, C, D type

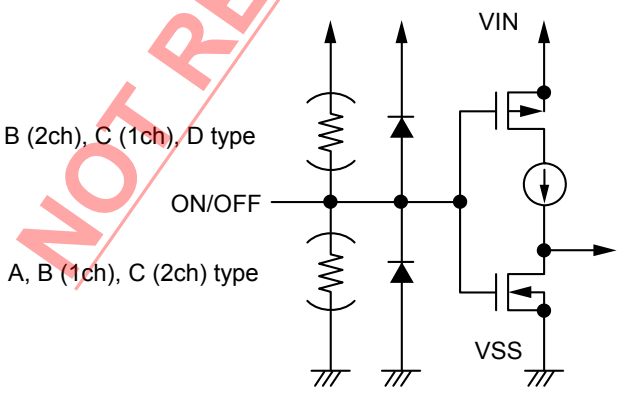

Figure 24

(2) S-1721 Series E, F, G, H type

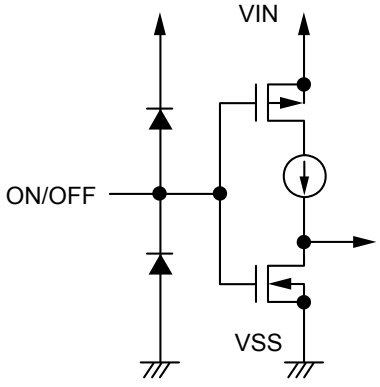

Figure 25

NOT RECOMMENDED FOR NEW DESIGN

4. Overcurrent protection circuit

The S-1721 Series has a built-in overcurrent protection circuit having the characteristics shown in "**(1) Output Voltage vs. Output Current (When Load Current Increases) (Ta = 25°C)**" in "**■ Characteristics (Typical Data) (Per Circuit)**", in order to protect the output transistor against an excessive output current and short circuiting between the VOUT pin and the VSS pin. The current when the output pin is short-circuited (I_{short}) is internally set at approx. 150 mA typ., and the normal value is restored for the output voltage, if releasing a short circuit once.

Caution This overcurrent protection circuit does not work as for thermal protection. If this IC long keeps short circuiting inside, pay attention to the conditions of input voltage and load current so that, under the usage conditions including short circuit, the loss of the IC will not exceed power dissipation of the package.

5. Pull-down/pull-up resistor (S-1721 Series A, B, C, and D type)

In the S-1721 Series A, B, C, and D type, the ON/OFF pin is internally pulled up to VIN pin or pulled down to VSS pin in the floating status, so the VOUT pin is set to V_{SS} level.

In A/B (1ch only) and C (2ch only), the ON/OFF pin is connected to VIN pin,
In B (2ch only)/C (1ch only)/D type, the ON/OFF pin is connected to VSS pin;
Note that during operation in these cases, the current consumption of the IC is generated as much as the current which flows into a pull-up resistor of 2.6 MΩ or a pull-down resistor of 2.6 MΩ.

NOT RECOMMENDED FOR NEW DESIGN

■ Precautions

- Wiring patterns for the VIN pin, the VOUT pin and GND should be designed and that the impedance is low. When mounting an output capacitor between the VOUT pin and VSS pin (C_{L1}, C_{L2}), a capacitor for stabilizing the input between the VIN pin and the VSS pin (C_{IN}), the distance from the capacitors to these pins should be as short as possible.
- Note that generally the output voltage may increase when a series regulator is used at low load current (1.0 mA or less).
- Note that generally the output voltage may increase due to the leakage current from an output driver when a series regulator is used at high temperature.
- Generally a series regulator may cause oscillation, depending on the selection of external parts. The following conditions are recommended for the S-1721 Series. However, be sure to perform sufficient evaluation under the actual usage conditions for selection, including evaluation of temperature characteristics. Refer to "**(5) Example of Equivalent Series Resistance vs. Output Current Characteristics (Ta = 25°C)**" in "■ **Reference Data (Per Circuit)**" for the equivalent series resistance (R_{ESR}) of the output capacitor.

  Input capacitor (C_{IN}) : 1.0 μF or more
  Output capacitor (C_{L1}, C_{L2}) : 1.0 μF or more

- The voltage regulator may oscillate when the impedance of the power supply is high and the input capacitor is small or an input capacitor is not connected. Note that, if the capacitance of the output capacitor is greater than that of the input capacitor, the voltage regulator may oscillate.
- Note that an oscillation may occur when the load current is high (100 mA or higher) and the difference between the voltage input and output is around the dropout voltage if the inductance of the power supply is high. Perform sufficient evaluation including electrical characteristics under the actual use conditions to select an input capacitor.
- Concerning the fluctuation of output voltage due to power-supplying and load, confirm with the actual device.
- Overshoot may occur in the output voltage momentarily if the voltage is rapidly raised at power-on or when the power supply fluctuates. Sufficiently evaluate the output voltage at power-on with the actual device.
- The application conditions for the input voltage, the output voltage, and the load current should not exceed the package power dissipation.
- Do not apply an electrostatic discharge to this IC that exceeds the performance ratings of the built-in electrostatic protection circuit.
- In determining the output current, attention should be paid to the output current value specified in **Table 10** in "■ **Electrical Characteristics**" and footnote ***5** of the table.
- ABLIC Inc. claims no responsibility for any disputes arising out of or in connection with any infringement by products including this IC of patents owned by a third party.

NOT RECOMMENDED FOR NEW DESIGN

■ Characteristics (Typical Data) (Per Circuit)

(1) Output Voltage vs. Output Current (When Load Current Increases) (Ta = 25°C)

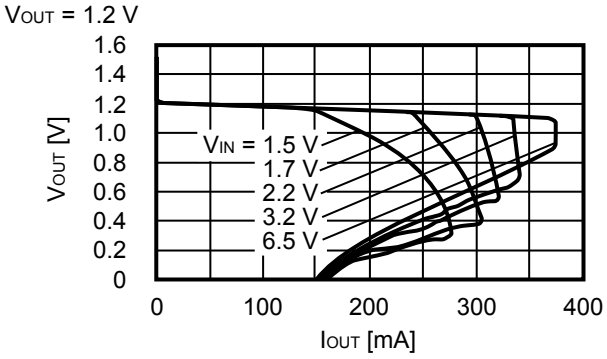

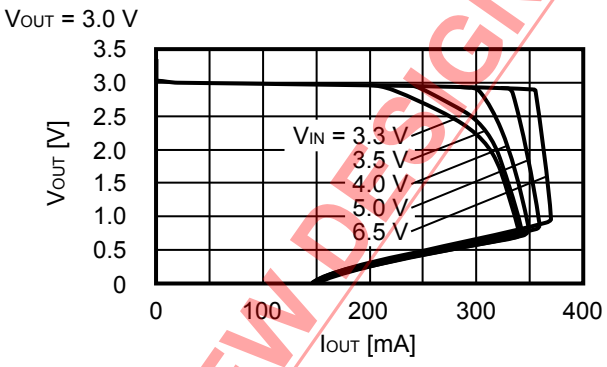

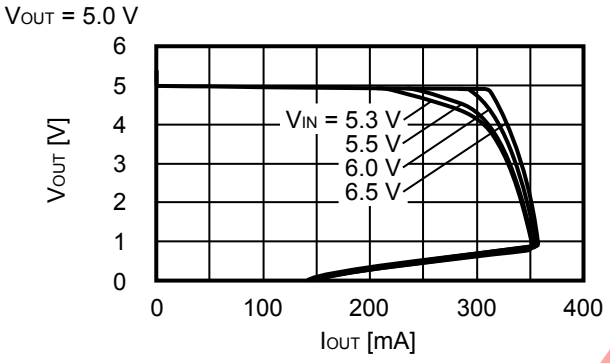

Remark In determining the output current, attention should be paid to the following.

1. The minimum output current value and footnote ***5** of **Table 10** in the "■ **Electrical Characteristics**"
2. The package power dissipation

(2) Output Voltage vs. Input Voltage (Ta = 25°C)

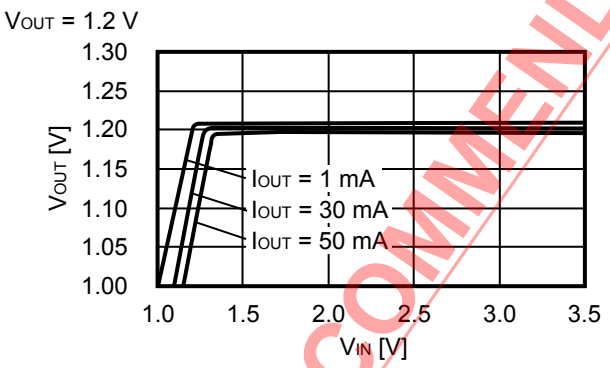

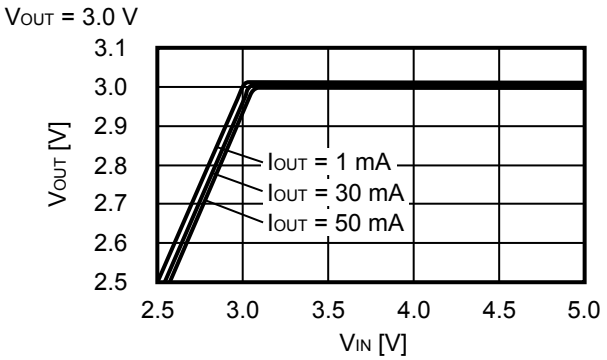

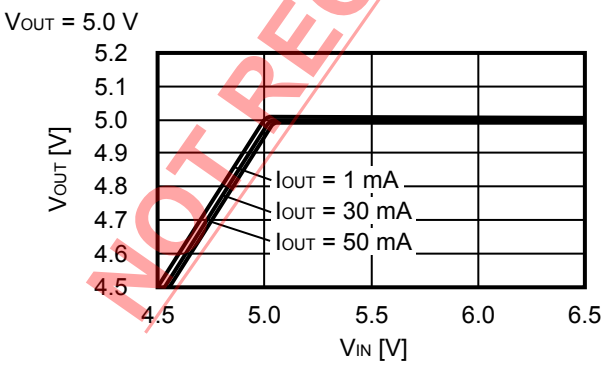

NOT RECOMMENDED FOR NEW DESIGN

(3) Dropout Voltage vs. Output Current

V_{OUT} = 1.2 V

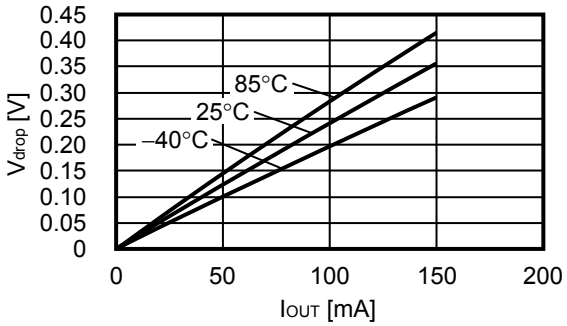

V_{OUT} = 3.0 V

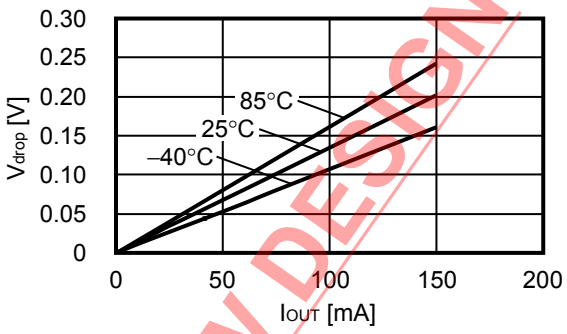

V_{OUT} = 5.0 V

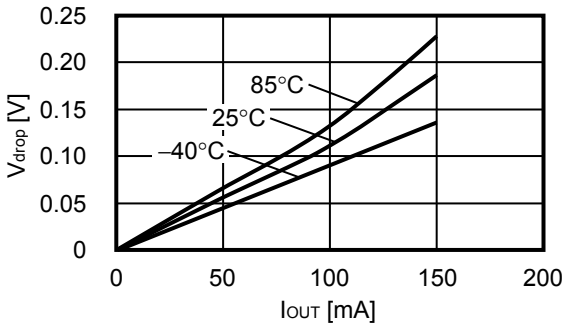

(4) Dropout Voltage vs. Set Output Voltage

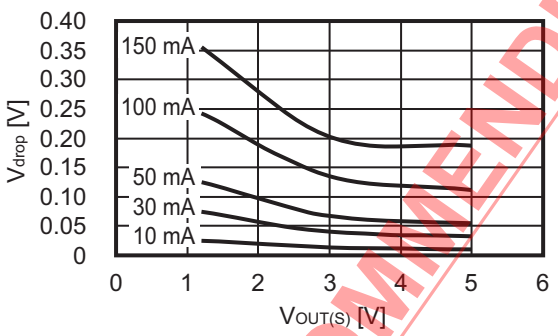

NOT RECOMMENDED FOR NEW DESIGN

(5) Output Voltage vs. Ambient Temperature

V_{OUT} = 1.2 V

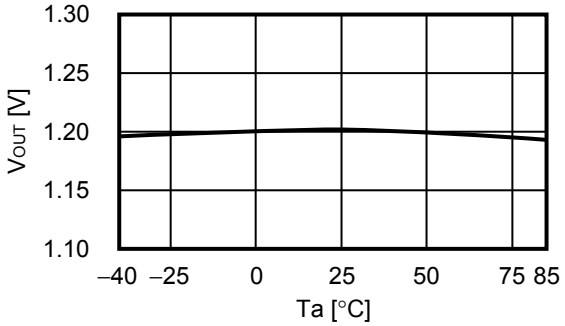

V_{OUT} = 3.0 V

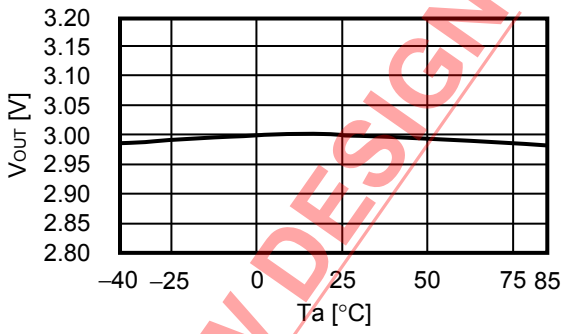

V_{OUT} = 5.0 V

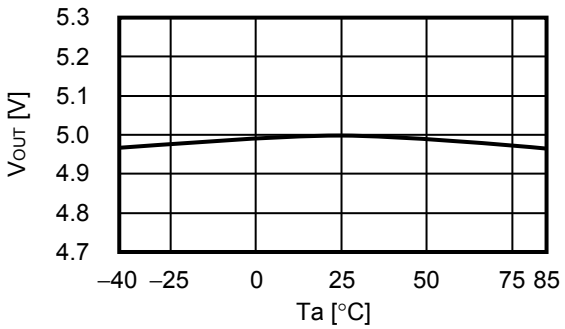

(6) Current Consumption vs. Input Voltage

V_{OUT} = 1.2 V

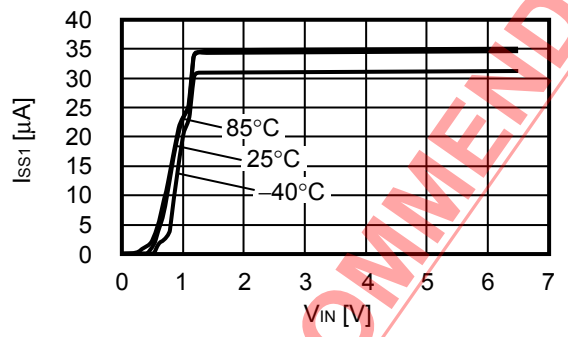

V_{OUT} = 3.0 V

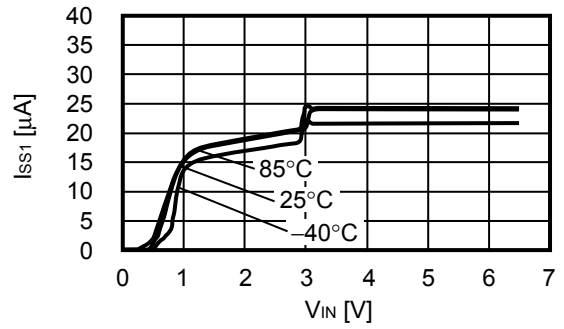

V_{OUT} = 5.0 V

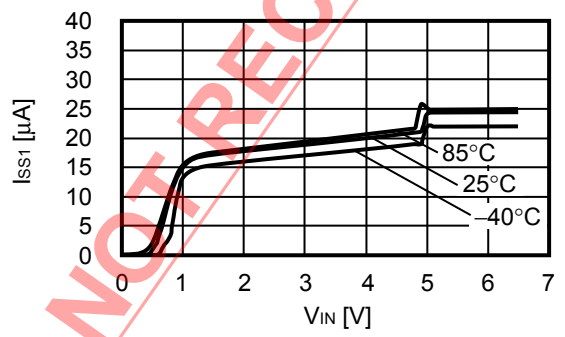

NOT RECOMMENDED FOR NEW DESIGN

(7) Ripple Rejection (Ta = 25°C)

V_{OUT} = 1.2 V

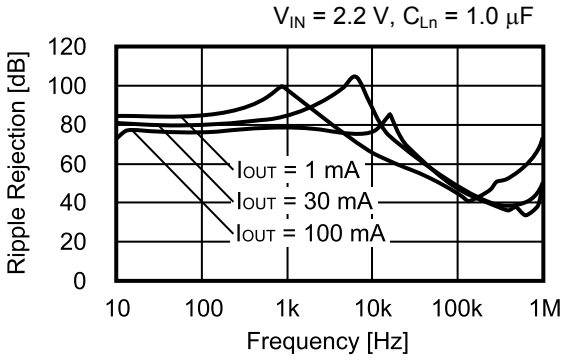

V_{OUT} = 3.0 V

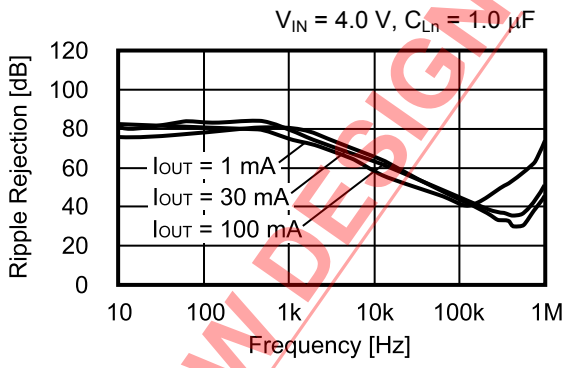

V_{OUT} = 5.0 V

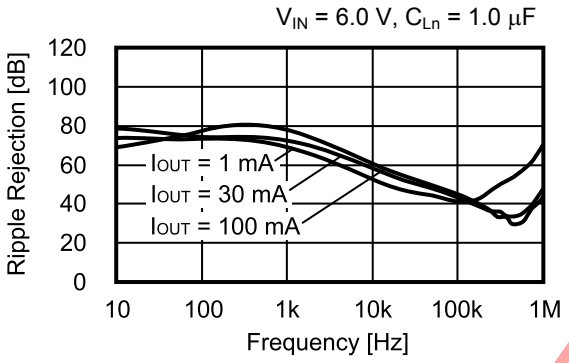

Remark C_{Ln}: Capacitor set to VOUTn pin externally (n = 1, 2)

NOT RECOMMENDED FOR NEW DESIGN

■ Reference Data (Per Circuit)

(1) Transient Response Characteristics when Input (Ta = 25°C) Common to VR1 and VR2

V_{OUT} = 1.2 V
I_{OUT} = 30 mA, $t_r = t_f$ = 5.0 µs, C_{Ln} = 1.0 µF, C_{IN} = 1.0 µF

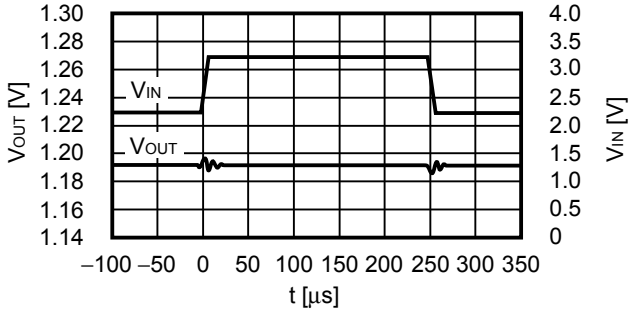

V_{OUT} = 3.0 V
I_{OUT} = 30 mA, $t_r = t_f$ = 5.0 µs, C_{Ln} = 1.0 µF, C_{IN} = 1.0 µF

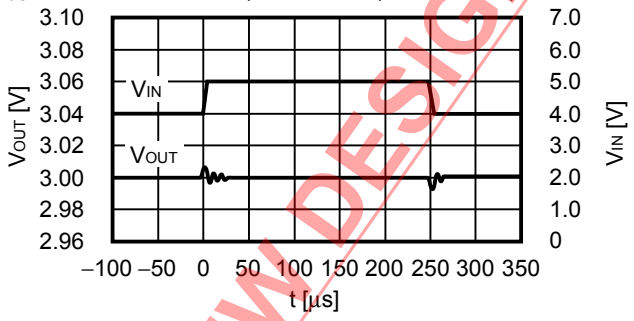

V_{OUT} = 5.0 V
I_{OUT} = 30 mA, $t_r = t_f$ = 5.0 µs, C_{Ln} = 1.0 µF, C_{IN} = 1.0 µF

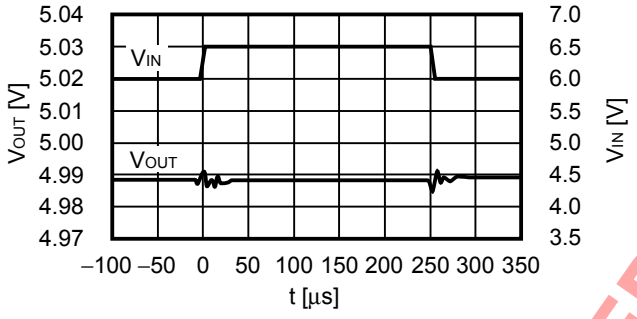

(2) Transient Response Characteristics of Load (Ta = 25°C)

V_{OUT} = 1.2 V
V_{IN} = 2.2 V, C_{Ln} = 1.0 µF, C_{IN} = 1.0 µF, I_{OUT} = 10 mA ↔ 50 mA

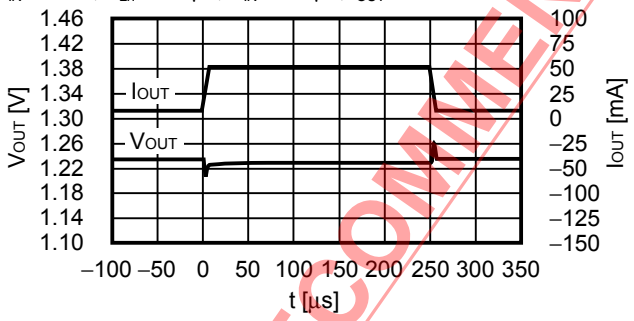

V_{OUT} = 1.2 V
V_{IN} = 2.2 V, C_{Ln} = 1.0 µF, C_{IN} = 1.0 µF, I_{OUT} = 10 mA ↔ 100 mA

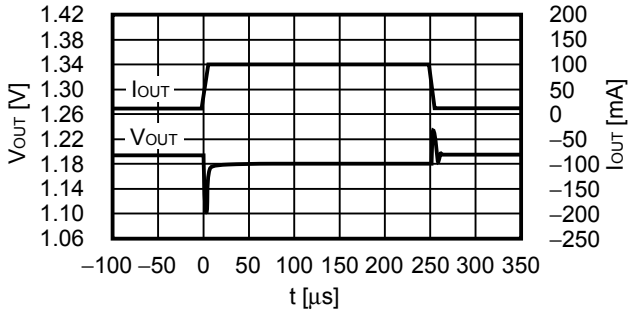

V_{OUT} = 3.0 V
V_{IN} = 4.0 V, C_{Ln} = 1.0 µF, C_{IN} = 1.0 µF, I_{OUT} = 10 mA ↔ 50 mA

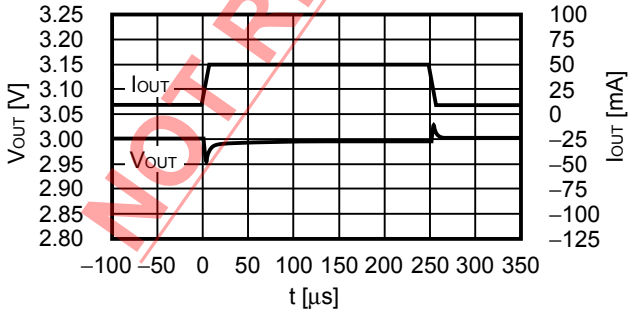

V_{OUT} = 3.0 V
V_{IN} = 4.0 V, C_{Ln} = 1.0 µF, C_{IN} = 1.0 µF, I_{OUT} = 10 mA ↔ 100 mA

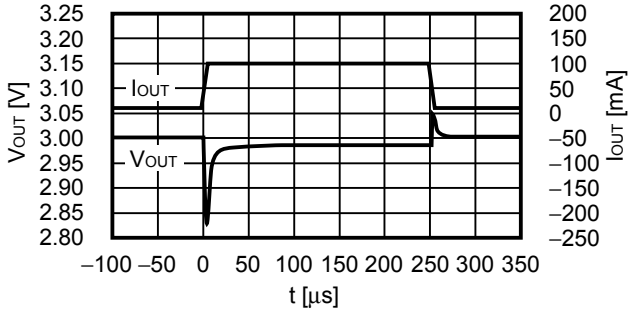

Remark C_{Ln}: Capacitor set to VOUTn pin externally (n = 1, 2)

NOT RECOMMENDED FOR NEW DESIGN

V_{OUT} = 5.0 V
V_{IN} = 6.0 V, C_{Ln} = 1.0 µF, C_{IN} = 1.0 µF, I_{OUT} = 10 mA ↔ 50 mA

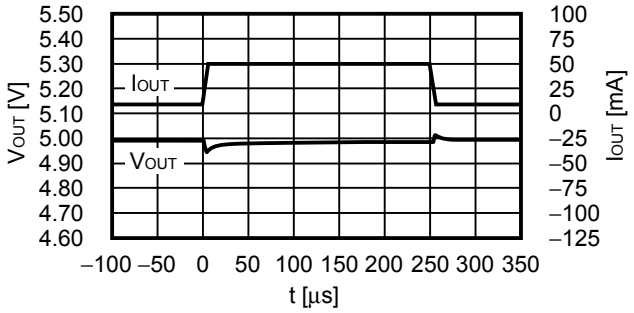

V_{OUT} = 5.0 V
V_{IN} = 6.0 V, C_{Ln} = 1.0 µF, C_{IN} = 1.0 µF, I_{OUT} = 10 mA ↔ 100 mA

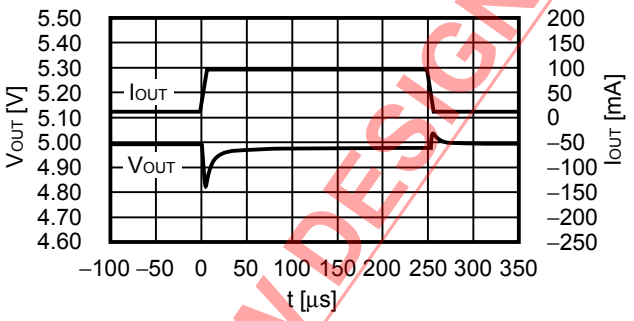

(3) Transient Response Characteristics of ON/OFF Pin (Ta = 25°C)

V_{OUT} = 1.2 V
V_{IN} = 2.2 V, t_r = 5.0 µs, C_{Ln} = 1.0 µF, C_{IN} = 1.0 µF, I_{OUT} = 100 mA

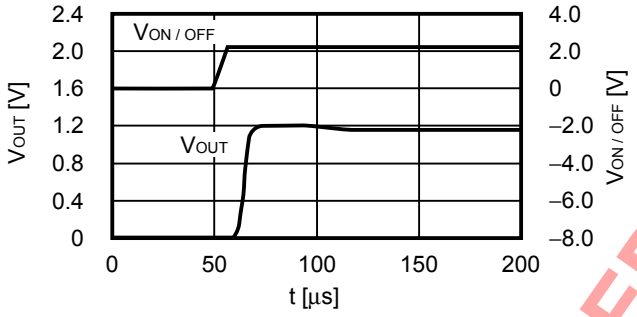

V_{OUT} = 3.0 V
V_{IN} = 4.0 V, t_r = 5.0 µs, C_{Ln} = 1.0 µF, C_{IN} = 1.0 µF, I_{OUT} = 100 mA

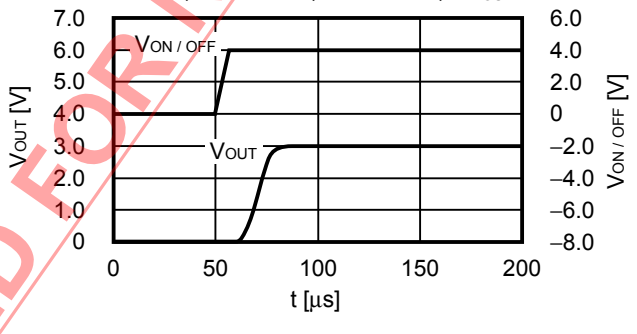

V_{OUT} = 5.0 V
V_{IN} = 6.0 V, t_r = 5.0 µs, C_{Ln} = 1.0 µF, C_{IN} = 1.0 µF, I_{OUT} = 100 mA

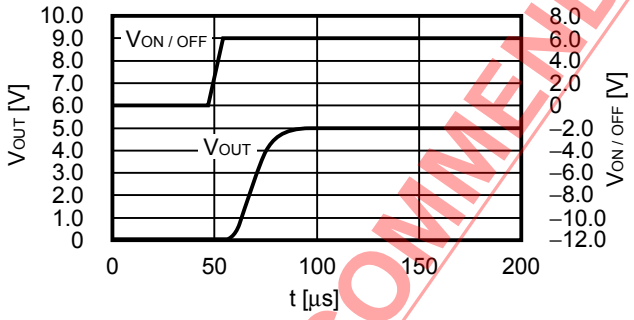

Remark C_{Ln}: Capacitor set to VOUTn pin externally (n = 1, 2)

NOT RECOMMENDED FOR NEW DESIGN

(4) Transient Response Characteristics of Load's Mutual Interference (Ta = 25°C)

$V_{OUT1} = V_{OUT2} = 1.2$ V
$V_{IN} = 2.2$ V, $C_{L1} = C_{L2} = 1.0$ µF, $C_{IN} = 1.0$ µF,
$I_{OUT1} = 10$ mA ↔ 100 mA, I_{OUT2} = no load

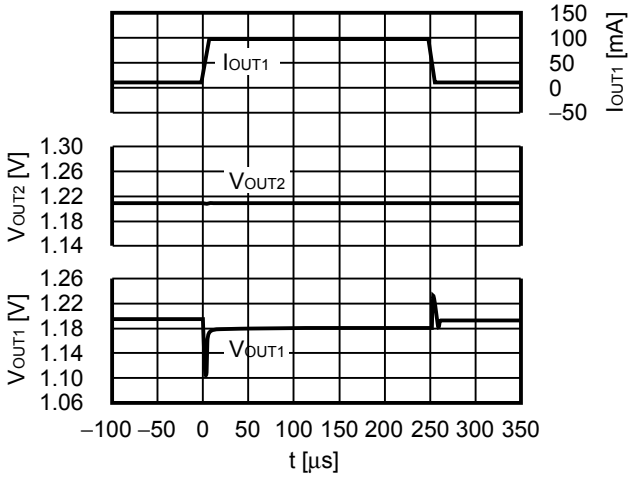

$V_{OUT1} = V_{OUT2} = 3.0$ V
$V_{IN} = 4.0$ V, $C_{L1} = C_{L2} = 1.0$ µF, $C_{IN} = 1.0$ µF,
$I_{OUT1} = 10$ mA ↔ 100 mA, I_{OUT2} = no load

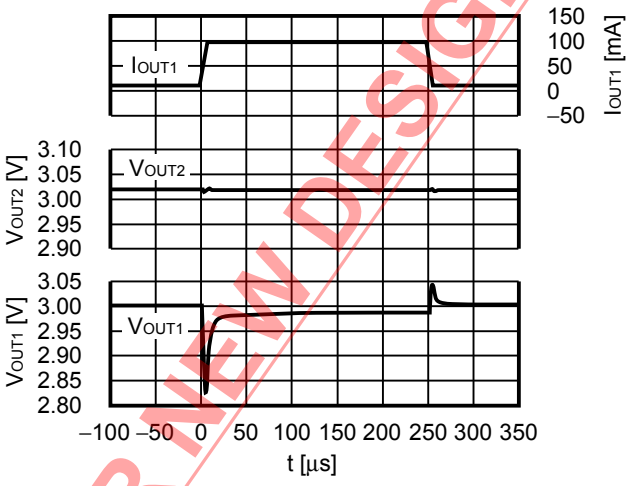

$V_{OUT1} = V_{OUT2} = 5.0$ V
$V_{IN} = 6.0$ V, $C_{L1} = C_{L2} = 1.0$ µF, $C_{IN} = 1.0$ µF,
$I_{OUT1} = 10$ mA ↔ 100 mA, I_{OUT2} = no load

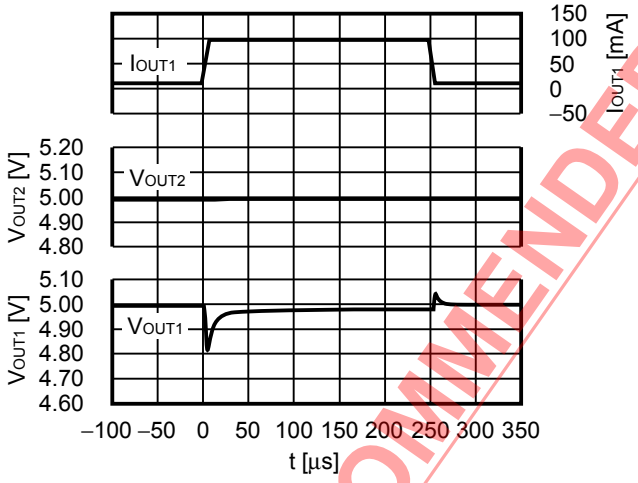

(5) Example of Equivalent Series Resistance vs. Output Current Characteristics (Ta = 25°C)

$C_{IN} = C_{Ln} = 1.0$ µF

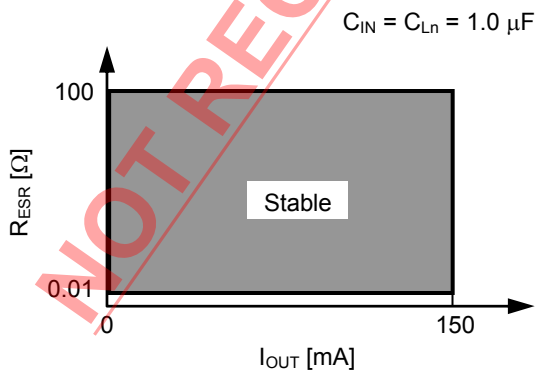

Remark C_{Ln}: Capacitor set to VOUTn pin externally (n = 1, 2)

NOT RECOMMENDED FOR NEW DESIGN

■ Marking Specifications

(1) SNT-6A

Top view

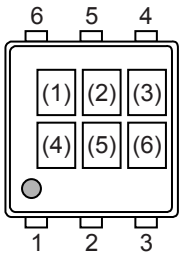

(1) to (3) : Product code (Refer to **Product name vs. Product code**)
(4) to (6) : Lot number

Product name vs. Product code

(a) S-1721 Series A type

Product Name	Product code		
	(1)	(2)	(3)
S-1721A1212-I6T1U	S	2	B
S-1721A1215-I6T1U	S	2	D
S-1721A1218-I6T1U	S	2	S
S-1721A1225-I6T1U	S	6	D
S-1721A1226-I6T1U	S	6	7
S-1721A1228-I6T1U	S	6	E
S-1721A122J-I6T1U	S	6	F
S-1721A1230-I6T1U	S	6	G
S-1721A1233-I6T1U	S	2	N
S-1721A1C18-I6T1U	S	2	W
S-1721A1512-I6T1U	S	6	H
S-1721A1513-I6T1U	S	2	P
S-1721A1515-I6T1U	S	2	Q
S-1721A1518-I6T1U	S	6	I
S-1721A1525-I6T1U	S	6	J
S-1721A152J-I6T1U	S	6	K
S-1721A1530-I6T1U	S	6	L
S-1721A1533-I6T1U	S	6	M
S-1721A1812-I6T1U	S	2	T
S-1721A1815-I6T1U	S	6	N
S-1721A1818-I6T1U	S	2	X
S-1721A1825-I6T1U	S	2	F
S-1721A1826-I6T1U	S	2	7
S-1721A1828-I6T1U	S	2	G
S-1721A1829-I6T1U	S	6	4
S-1721A182J-I6T1U	S	2	U
S-1721A1830-I6T1U	S	2	3
S-1721A1833-I6T1U	S	2	2
S-1721A2020-I6T1U	S	2	C
S-1721A2121-I6T1U	S	2	R
S-1721A2512-I6T1U	S	6	O

Product Name	Product code		
	(1)	(2)	(3)
S-1721A2515-I6T1U	S	6	P
S-1721A2518-I6T1U	S	2	Z
S-1721A2525-I6T1U	S	6	Q
S-1721A2528-I6T1U	S	6	R
S-1721A252J-I6T1U	S	6	S
S-1721A2530-I6T1U	S	6	T
S-1721A2533-I6T1U	S	6	U
S-1721A2613-I6T1U	S	6	A
S-1721A2812-I6T1U	S	6	B
S-1721A2815-I6T1U	S	2	H
S-1721A2818-I6T1U	S	2	I
S-1721A2825-I6T1U	S	6	V
S-1721A2826-I6T1U	S	2	8
S-1721A2828-I6T1U	S	2	A
S-1721A282J-I6T1U	S	6	W
S-1721A2830-I6T1U	S	6	X
S-1721A2833-I6T1U	S	6	C
S-1721A2J12-I6T1U	S	6	9
S-1721A2J15-I6T1U	S	7	A
S-1721A2J18-I6T1U	S	2	V
S-1721A2J2J-I6T1U	S	2	J
S-1721A2J33-I6T1U	S	6	8
S-1721A3018-I6T1U	S	2	6
S-1721A3028-I6T1U	S	6	Y
S-1721A3030-I6T1U	S	2	K
S-1721A3033-I6T1U	S	6	Z
S-1721A3119-I6T1U	S	2	L
S-1721A3318-I6T1U	S	2	M
S-1721A3330-I6T1U	S	6	2
S-1721A3333-I6T1U	S	2	O

NOT RECOMMENDED FOR NEW DESIGN

(b) S-1721 Series B type

Product Name	Product code		
	(1)	(2)	(3)
S-1721B1515-I6T1U	S	3	A
S-1721B1518-I6T1U	S	3	B
S-1721B1812-I6T1U	S	3	C
S-1721B1818-I6T1U	S	3	D
S-1721B2818-I6T1U	S	3	E
S-1721B2J2J-I6T1U	S	3	F

(c) S-1721 Series C type

Product Name	Product code		
	(1)	(2)	(3)
S-1721C2J2J-I6T1U	S	4	A

(d) S-1721 Series D type

Product Name	Product code		
	(1)	(2)	(3)
S-1721D1818-I6T1U	S	4	T
S-1721D3318-I6T1U	S	4	S

(e) S-1721 Series E type

Product Name	Product code		
	(1)	(2)	(3)
S-1721E1328-I6T1U	S	5	A
S-1721E1528-I6T1U	S	5	B
S-1721E1828-I6T1U	S	5	D
S-1721E1833-I6T1U	S	5	L
S-1721E2518-I6T1U	S	5	E
S-1721E2525-I6T1U	S	5	F
S-1721E2530-I6T1U	S	5	O
S-1721E2818-I6T1U	S	5	G
S-1721E2833-I6T1U	S	5	H
S-1721E2J25-I6T1U	S	5	K
S-1721E2J2J-I6T1U	S	5	I
S-1721E3012-I6T1U	S	5	S
S-1721E3025-I6T1U	S	5	P
S-1721E3033-I6T1U	S	5	J

NOT RECOMMENDED FOR NEW DESIGN

(2) SOT-23-6

Top view

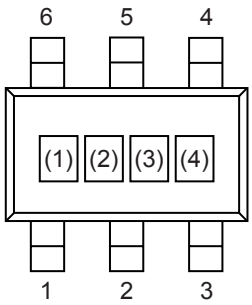

(1) to (3) : Product code (Refer to **Product name vs. Product code**)
(4) : Lot number

Product name vs. Product code

(a) S-1721 Series A type

Product Name	Product code		
	(1)	(2)	(3)
S-1721A1212-M6T1x	S	2	B
S-1721A1215-M6T1x	S	2	D
S-1721A1228-M6T1x	S	6	E
S-1721A1233-M6T1x	S	2	N
S-1721A1328-M6T1x	S	2	4
S-1721A1330-M6T1x	S	2	E
S-1721A1528-M6T1x	S	2	Y
S-1721A1530-M6T1x	S	6	L
S-1721A1533-M6T1x	S	6	M
S-1721A1825-M6T1x	S	2	F
S-1721A1828-M6T1x	S	2	G
S-1721A1830-M6T1x	S	2	3
S-1721A1833-M6T1x	S	2	2
S-1721A2020-M6T1x	S	2	C

Product Name	Product code		
	(1)	(2)	(3)
S-1721A2518-M6T1x	S	2	Z
S-1721A2528-M6T1x	S	6	R
S-1721A2812-M6T1x	S	6	B
S-1721A2815-M6T1x	S	2	H
S-1721A2818-M6T1x	S	2	I
S-1721A2828-M6T1x	S	2	A
S-1721A2830-M6T1x	S	6	X
S-1721A2833-M6T1x	S	6	C
S-1721A2J2J-M6T1x	S	2	J
S-1721A3312-M6T1x	S	2	9
S-1721A3318-M6T1x	S	2	M
S-1721A3328-M6T1x	S	6	3
S-1721A3333-M6T1x	S	2	O

(b) S-1721 Series B type

Product Name	Product code		
	(1)	(2)	(3)
S-1721B2828-M6T1x	S	3	G

(c) S-1721 Series C type

Product Name	Product code		
	(1)	(2)	(3)
S-1721C2J2J-M6T1x	S	4	A

(d) S-1721 Series D type

Product Name	Product code		
	(1)	(2)	(3)
S-1721D1828-M6T1x	S	4	R
S-1721D3318-M6T1x	S	4	S

(e) S-1721 Series E type

Product Name	Product code		
	(1)	(2)	(3)
S-1721E1528-M6T1x	S	5	B
S-1721E1825-M6T1x	S	5	U
S-1721E1826-M6T1x	S	5	C
S-1721E1828-M6T1x	S	5	D
S-1721E1830-M6T1x	S	5	Q
S-1721E1833-M6T1x	S	5	L
S-1721E2025-M6T1x	S	5	T
S-1721E2813-M6T1x	S	5	M
S-1721E2818-M6T1x	S	5	G
S-1721E2833-M6T1x	S	5	H
S-1721E2J25-M6T1x	S	5	K
S-1721E3312-M6T1x	S	5	N

Remark 1. x: G or U
2. Please select products of environmental code = U for Sn 100%, halogen-free products.

NOT RECOMMENDED FOR NEW DESIGN

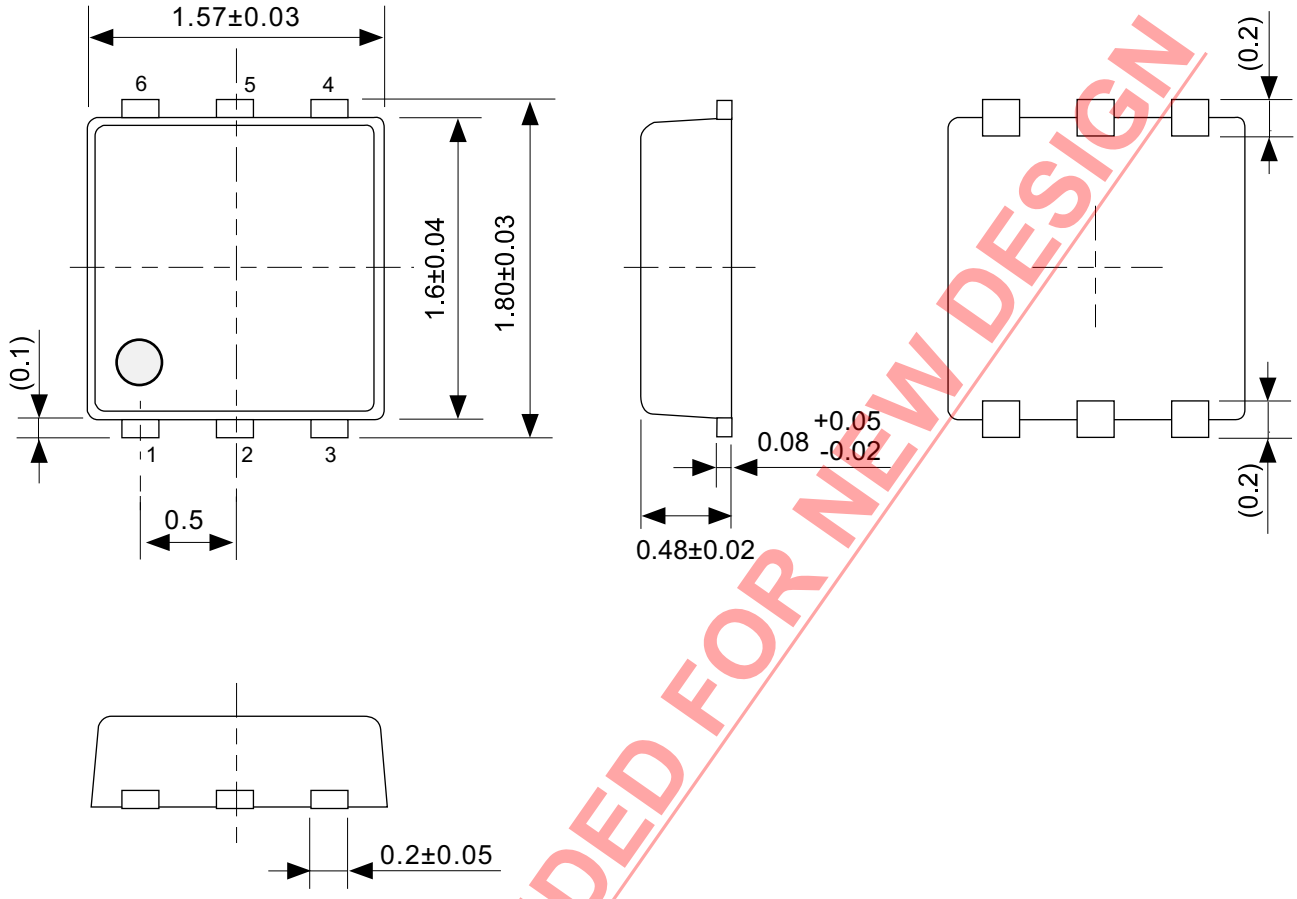

NOT RECOMMENDED FOR NEW DESIGN

No. PG006-A-P-SD-2.1

TITLE	SNT-6A-A-PKG Dimensions
No.	PG006-A-P-SD-2.1
ANGLE	
UNIT	mm

ABLIC Inc.

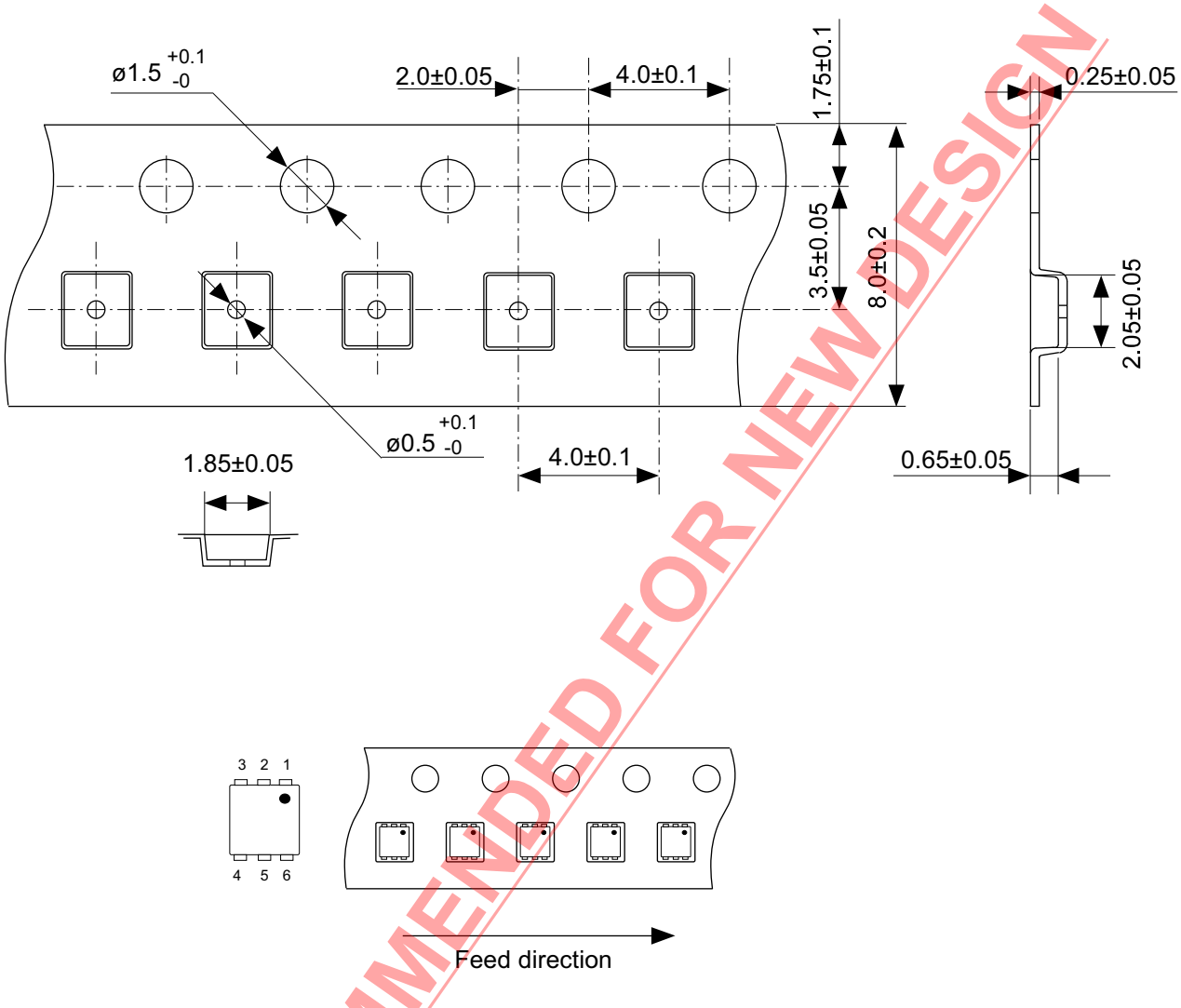

NOT RECOMMENDED FOR NEW DESIGN

No. PG006-A-C-SD-2.0

TITLE	SNT-6A-A-Carrier Tape
No.	PG006-A-C-SD-2.0
ANGLE	
UNIT	mm

ABLIC Inc.

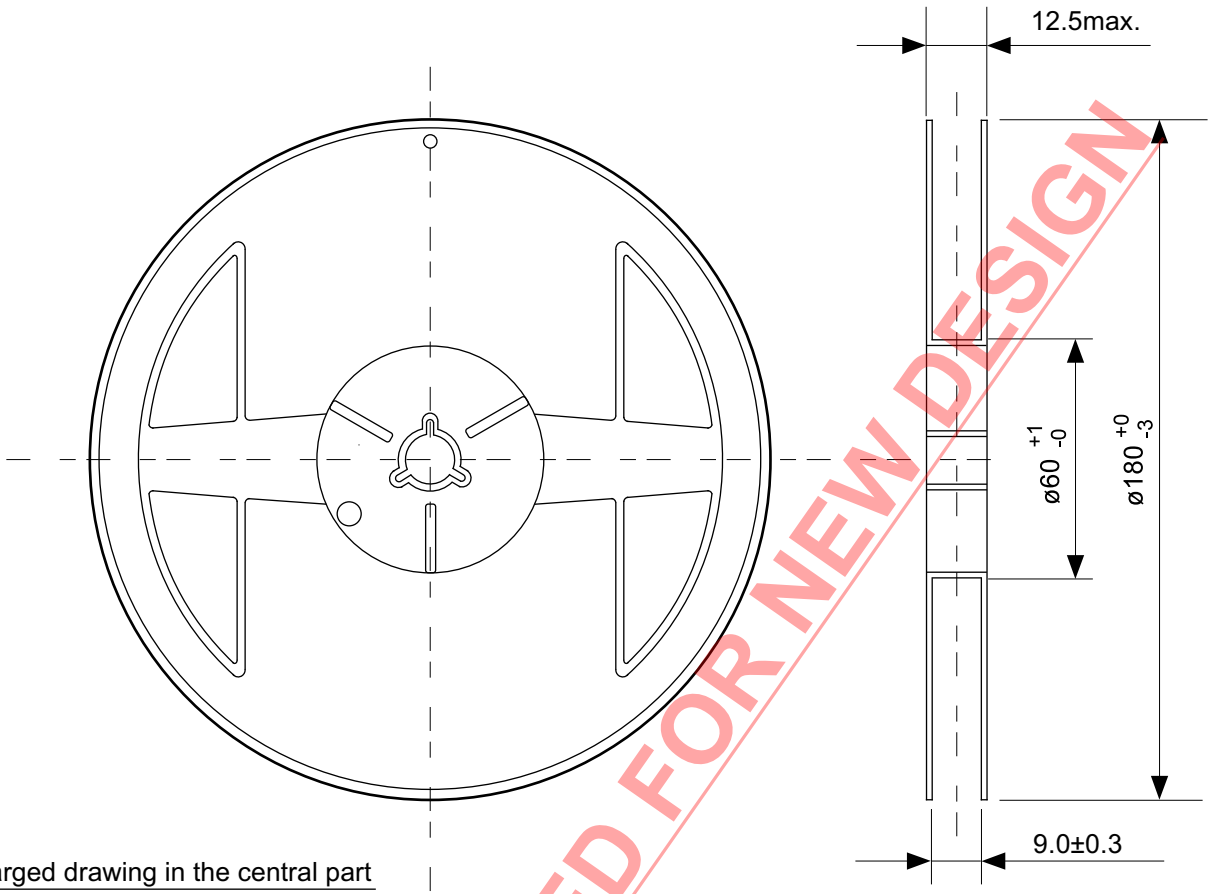

Enlarged drawing in the central part

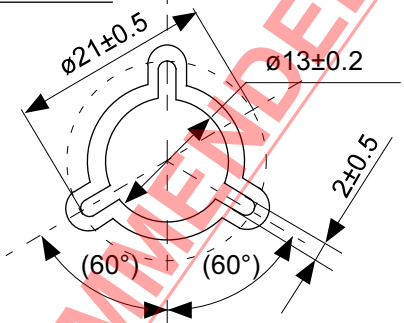

No. PG006-A-R-SD-1.0

NOT RECOMMENDED FOR NEW DESIGN

TITLE	SNT-6A-A-Reel		
No.	PG006-A-R-SD-1.0		
ANGLE		QTY.	5,000
UNIT	mm		
ABLIC Inc.			

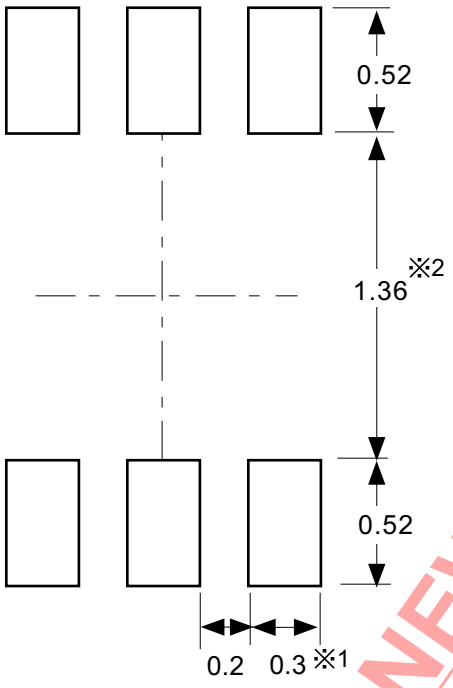

※1. ランドパターンの幅に注意してください (0.25 mm min. / 0.30 mm typ.)。
※2. パッケージ中央にランドパターンを広げないでください (1.30 mm ~ 1.40 mm)。

注意 1. パッケージのモールド樹脂下にシルク印刷やハンダ印刷などしないでください。
2. パッケージ下の配線上のソルダーレジストなどの厚みをランドパターン表面から0.03 mm 以下にしてください。
3. マスク開口サイズと開口位置はランドパターンと合わせてください。
4. 詳細は〝SNTパッケージ活用の手引き〟を参照してください。

※1. Pay attention to the land pattern width (0.25 mm min. / 0.30 mm typ.).
※2. Do not widen the land pattern to the center of the package (1.30 mm ~ 1.40 mm).

Caution 1. Do not do silkscreen printing and solder printing under the mold resin of the package.
2. The thickness of the solder resist on the wire pattern under the package should be 0.03 mm or less from the land pattern surface.
3. Match the mask aperture size and aperture position with the land pattern.
4. Refer to "SNT Package User's Guide" for details.

※1. 请注意焊盘模式的宽度 (0.25 mm min. / 0.30 mm typ.)。
※2. 请勿向封装中间扩展焊盘模式 (1.30 mm ~ 1.40 mm)。

注意 1. 请勿在树脂型封装的下面印刷丝网、焊锡。
2. 在封装下、布线上的阻焊膜厚度 (从焊盘模式表面起) 请控制在 0.03 mm 以下。
3. 钢网的开口尺寸和开口位置请与焊盘模式对齐。
4. 详细内容请参阅 "SNT 封装的应用指南"。

NOT RECOMMENDED FOR NEW DESIGN

No. PG006-A-L-SD-4.1

TITLE	SNT-6A-A -Land Recommendation
No.	PG006-A-L-SD-4.1
ANGLE	
UNIT	mm

ABLIC Inc.

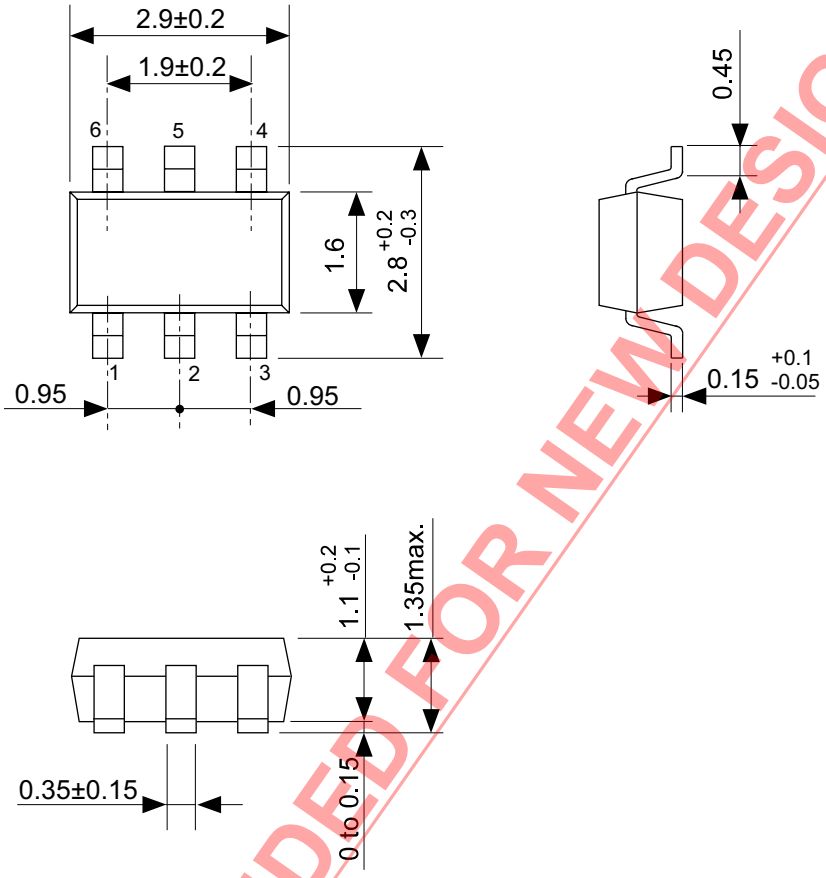

NOT RECOMMENDED FOR NEW DESIGN

No. MP006-A-P-SD-2.1

TITLE	SOT236-A-PKG Dimensions
No.	MP006-A-P-SD-2.1
ANGLE	
UNIT	mm

ABLIC Inc.

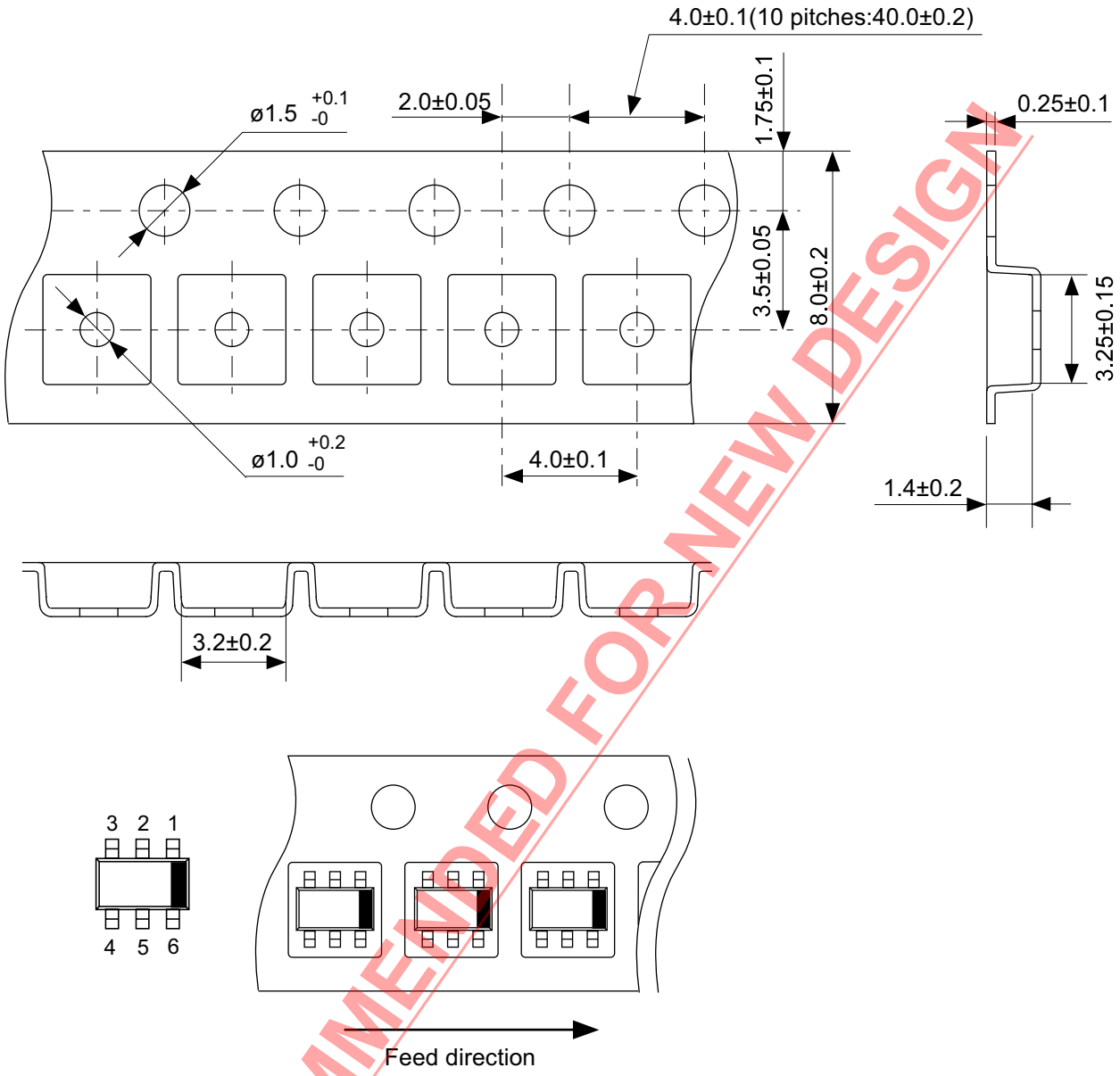

NOT RECOMMENDED FOR NEW DESIGN

No. MP006-A-C-SD-3.1

TITLE	SOT236-A-Carrier Tape
No.	MP006-A-C-SD-3.1
ANGLE	
UNIT	mm

ABLIC Inc.

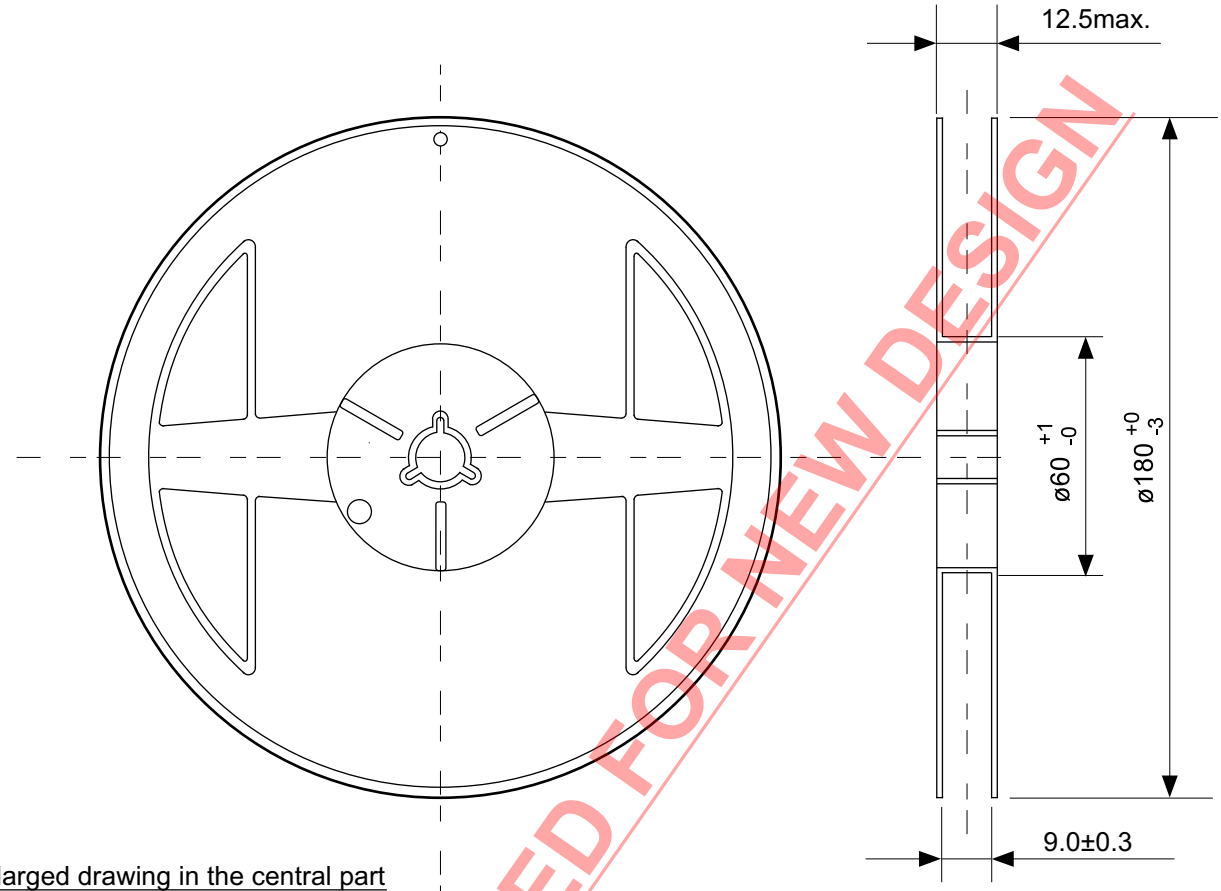

Enlarged drawing in the central part

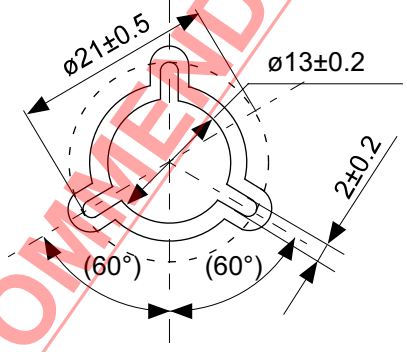

No. MP006-A-R-SD-2.1

NOT RECOMMENDED FOR NEW DESIGN

TITLE	SOT236-A-Reel		
No.	MP006-A-R-SD-2.1		
ANGLE		QTY	3,000
UNIT	mm		

ABLIC Inc.

Disclaimers (Handling Precautions)

1. All the information described herein (product data, specifications, figures, tables, programs, algorithms and application circuit examples, etc.) is current as of publishing date of this document and is subject to change without notice.
2. The circuit examples and the usages described herein are for reference only, and do not guarantee the success of any specific mass-production design.
   ABLIC Inc. is not liable for any losses, damages, claims or demands caused by the reasons other than the products described herein (hereinafter "the products") or infringement of third-party intellectual property right and any other right due to the use of the information described herein.
3. ABLIC Inc. is not liable for any losses, damages, claims or demands caused by the incorrect information described herein.
4. Be careful to use the products within their ranges described herein. Pay special attention for use to the absolute maximum ratings, operation voltage range and electrical characteristics, etc.
   ABLIC Inc. is not liable for any losses, damages, claims or demands caused by failures and / or accidents, etc. due to the use of the products outside their specified ranges.
5. Before using the products, confirm their applications, and the laws and regulations of the region or country where they are used and verify suitability, safety and other factors for the intended use.
6. When exporting the products, comply with the Foreign Exchange and Foreign Trade Act and all other export-related laws, and follow the required procedures.
7. The products are strictly prohibited from using, providing or exporting for the purposes of the development of weapons of mass destruction or military use. ABLIC Inc. is not liable for any losses, damages, claims or demands caused by any provision or export to the person or entity who intends to develop, manufacture, use or store nuclear, biological or chemical weapons or missiles, or use any other military purposes.
8. The products are not designed to be used as part of any device or equipment that may affect the human body, human life, or assets (such as medical equipment, disaster prevention systems, security systems, combustion control systems, infrastructure control systems, vehicle equipment, traffic systems, in-vehicle equipment, aviation equipment, aerospace equipment, and nuclear-related equipment), excluding when specified for in-vehicle use or other uses by ABLIC, Inc. Do not apply the products to the above listed devices and equipments.
   ABLIC Inc. is not liable for any losses, damages, claims or demands caused by unauthorized or unspecified use of the products.
9. In general, semiconductor products may fail or malfunction with some probability. The user of the products should therefore take responsibility to give thorough consideration to safety design including redundancy, fire spread prevention measures, and malfunction prevention to prevent accidents causing injury or death, fires and social damage, etc. that may ensue from the products' failure or malfunction.
   The entire system in which the products are used must be sufficiently evaluated and judged whether the products are allowed to apply for the system on customer's own responsibility.
10. The products are not designed to be radiation-proof. The necessary radiation measures should be taken in the product design by the customer depending on the intended use.
11. The products do not affect human health under normal use. However, they contain chemical substances and heavy metals and should therefore not be put in the mouth. The fracture surfaces of wafers and chips may be sharp. Be careful when handling these with the bare hands to prevent injuries, etc.
12. When disposing of the products, comply with the laws and ordinances of the country or region where they are used.
13. The information described herein contains copyright information and know-how of ABLIC Inc. The information described herein does not convey any license under any intellectual property rights or any other rights belonging to ABLIC Inc. or a third party. Reproduction or copying of the information from this document or any part of this document described herein for the purpose of disclosing it to a third-party is strictly prohibited without the express permission of ABLIC Inc.
14. For more details on the information described herein or any other questions, please contact ABLIC Inc.'s sales representative.
15. This Disclaimers have been delivered in a text using the Japanese language, which text, despite any translations into the English language and the Chinese language, shall be controlling.

NOT RECOMMENDED FOR NEW DESIGN

ENTEGRECİ

Bu belge www.entegreci.com üzerinden sunulmaktadır.

Elektronik komponent tedarikinde Entegreci

Entegreci, Eskişehir merkezli, Türkiye geneline satış yapan bir elektronik komponent mağazasıdır. Entegreler (IC), mikrodenetleyiciler, transistörler, diyotlar, pasif elemanlar, konnektörler, modüller ve geliştirme kartları tek adetten seri üretim adetlerine kadar satılır. Ürün sayfalarında güncel stok durumunu, fiyatı ve datasheet bağlantısını bulabilirsiniz.

Parça koduyla arama

Üretici parça numarasını yazın; stok ve fiyatı hemen görün.

www.entegreci.com

Ürün kategorileri

Entegreden kapasitöre tüm elektronik komponent kategorileri.

Kategorilere göz atın

Üreticiler

Aradığınız üreticinin ürünlerini tek sayfada inceleyin.

Üreticileri görün

Toplu alım ve teklif

Listede olmayan ya da yüksek adetli parçalar için teklif isteyin.

Teklif isteyin

www.entegreci.com | **destek@entegreci.com** | **0850 305 90 34**

Entegreci is an online electronic components store based in Türkiye. Search by manufacturer part number to see stock, prices and datasheets for integrated circuits, microcontrollers, transistors, passive components and connectors, or request a quote for parts that are not listed.

Bu sayfa Entegreci tarafından eklenmiştir. Belgenin önceki sayfaları asıl yayıncısına aittir ve içeriği değiştirilmemiştir; en güncel sürüm için belgenin yayıncısına başvurun.