S-812C Series

16 V INPUT, 75 mA VOLTAGE REGULATOR

www.ablic.com

© ABLIC Inc., 2001-2017

Rev.7.0_01

The S-812C Series is a high-withstand voltage regulator IC which is developed by using the CMOS technology. This IC is suitable for applications which require withstand because its maximum voltage for operation is as high as 16 V, also for portable device having the low current consumption because this IC not only has the low current consumption but also a ON/OFF circuit. This IC operates stably due to the internal phase compensation circuit so that users are able to use ceramic capacitor as the output capacitor.

■ Features

- Output voltage: 2.0 V to 6.0 V, selectable in 0.1 V step
- Input voltage: 16 V max.
- Output voltage accuracy: ±2.0%
- Dropout voltage: 120 mV typ. (5.0 V output product, I_{OUT} = 10 mA)
- Current consumption: During operation: 1.0 μA typ., 1.8 μA max. (3.0 V output product)
- Output current: Possible to output 50 mA (3.0 V output product, V_{IN} = 5 V)*1
  Possible to output 75 mA (5.0 V output product, V_{IN} = 7 V)*1
- Built-in ON/OFF circuit: Selectable available / unavailable of power-off function
  Selectable active "H" / "L" in the regulator
- Built-in short-circuit protection circuit: Selectable available / unavailable of short-circuit protection circuit
  Available short-circuit protection: Short-circuit current 40 mA typ.
- Operation temperature range: Ta = −40°C to +85°C
- Lead-free, Sn 100%, halogen-free*2

***1.** Attention should be paid to the power dissipation of the package when the load is large.
***2.** Refer to "■ **Product Name Structure**" for details.

■ Applications

- Constant-voltage power supply for home electric appliance
- Constant-voltage power supply for battery-powered device
- Constant-voltage power supply for communication device

■ Packages

- SNT-6A(H)
- SOT-23-5
- SOT-89-3
- SOT-89-5
- TO-92
- WLP-4R

■ Block Diagrams

1. S-812CxxA Series (Unavailable short-circuit protection and power-off function)

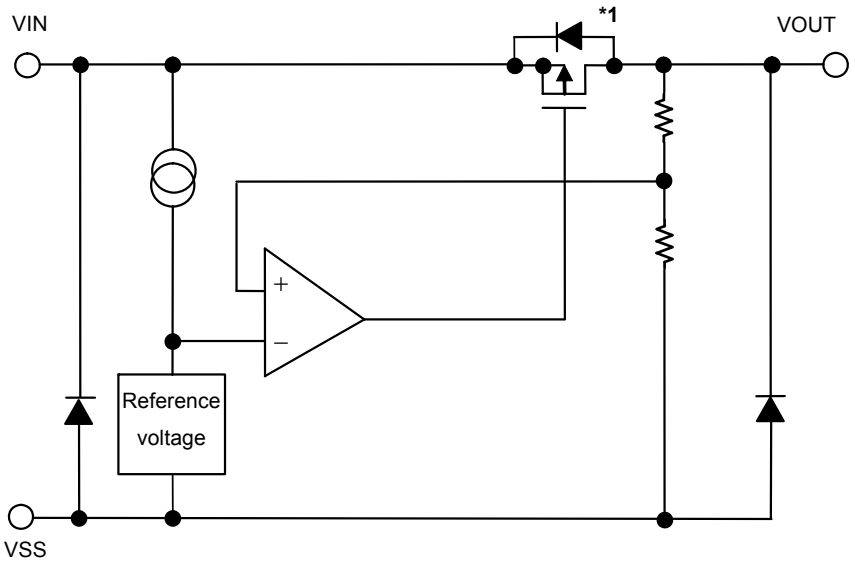

***1.** Parasitic diode

Figure 1

2. S-812CxxB Series (Available short-circuit protection and power-off function)

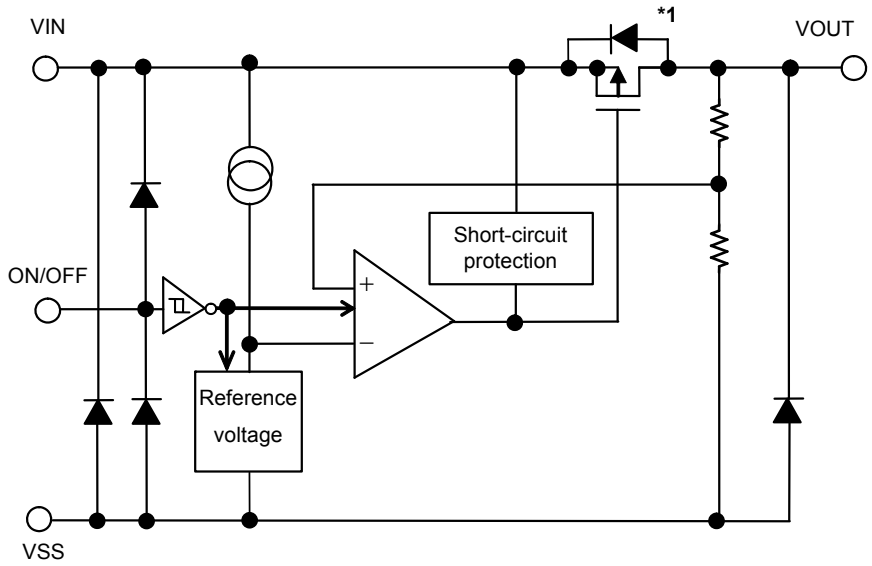

***1.** Parasitic diode

Figure 2

3. S-812CxxE Series (Available Short-circuit protection function, unavailable power-off function)

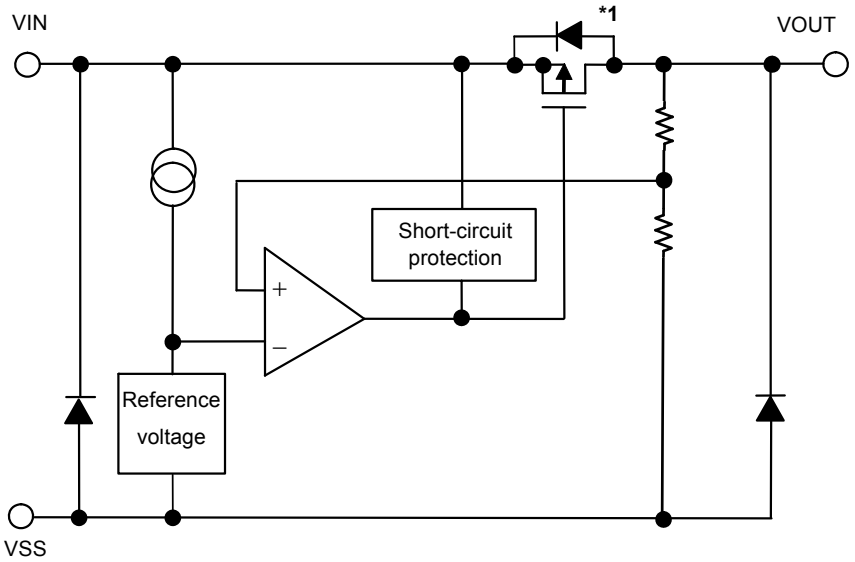

1. Parasitic diode

Figure 3

■ Product Name Structure

Users can select the product type, output voltage, and package type for the S-812C Series. Refer to "**1. Product name**" regarding the contents of product name, "**2. Packages**" regarding the package drawings, "**3. Product name list**" regarding details of product name.

1. Product name

1. 1 S-812CxxA series

1. 1. 1 SOT-23-5, SOT-89-3

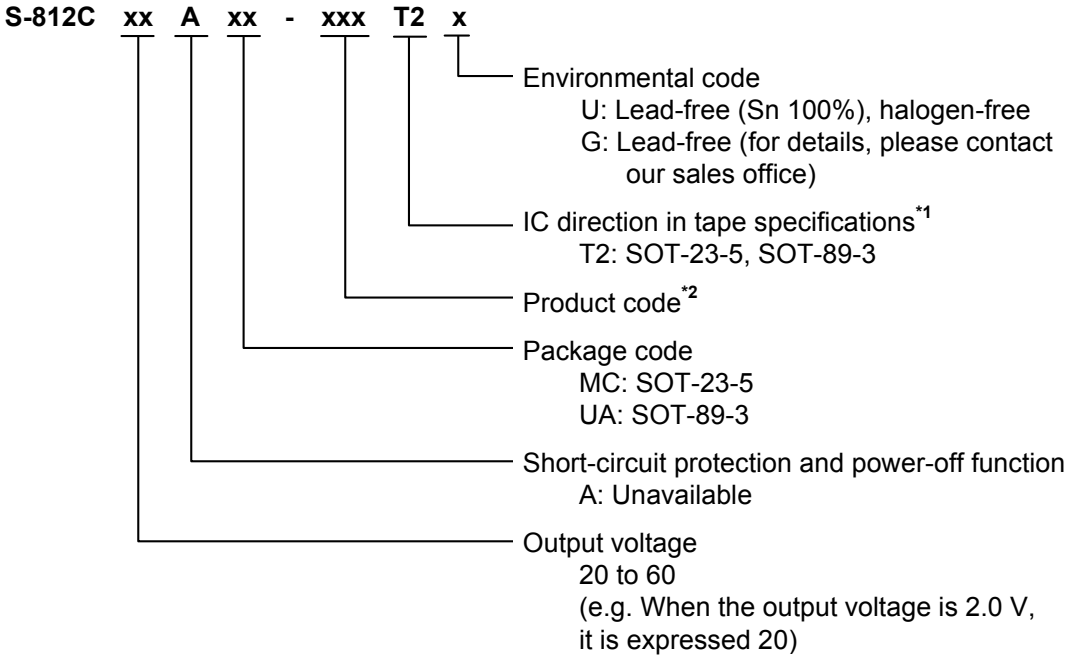

***1.** Refer to the tape drawing.
***2.** Refer to "**3. Product name list**".

1. 1. 2 TO-92

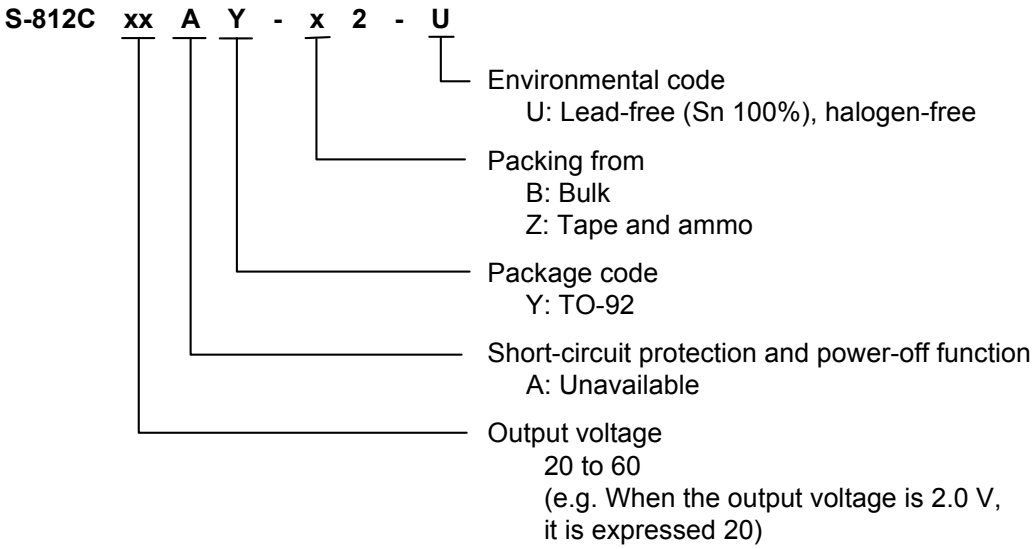

1. 2 S-812CxxB series

1. 2. 1 SNT-6A(H)

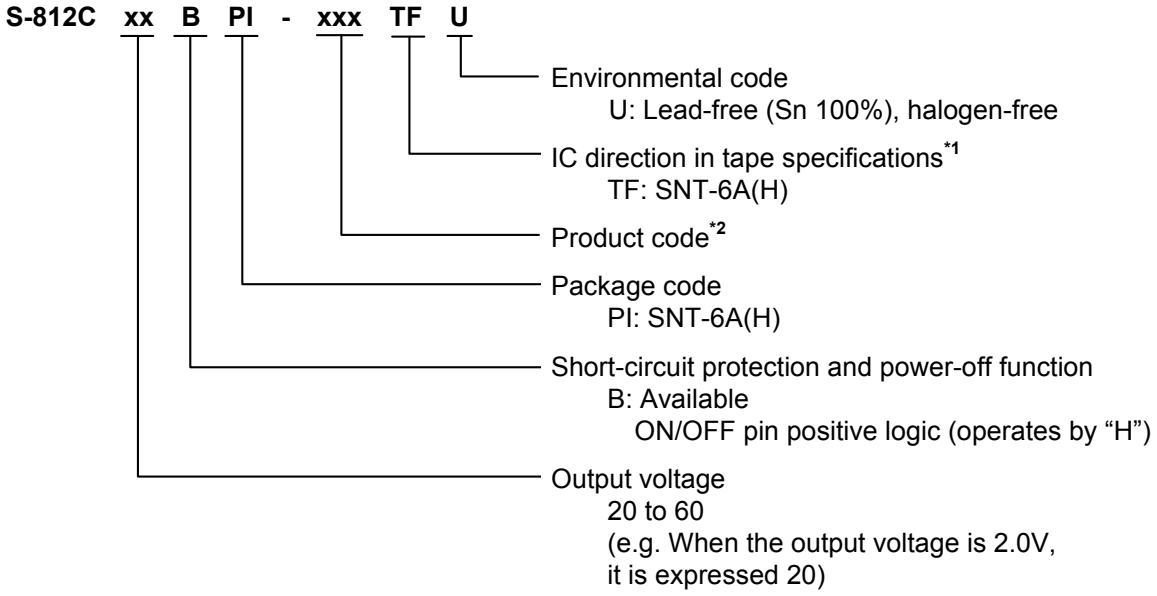

***1.** Refer to the tape drawing.
***2.** Refer to "**3. Product name list**".

1. 2. 2 SOT-23-5、SOT-89-5

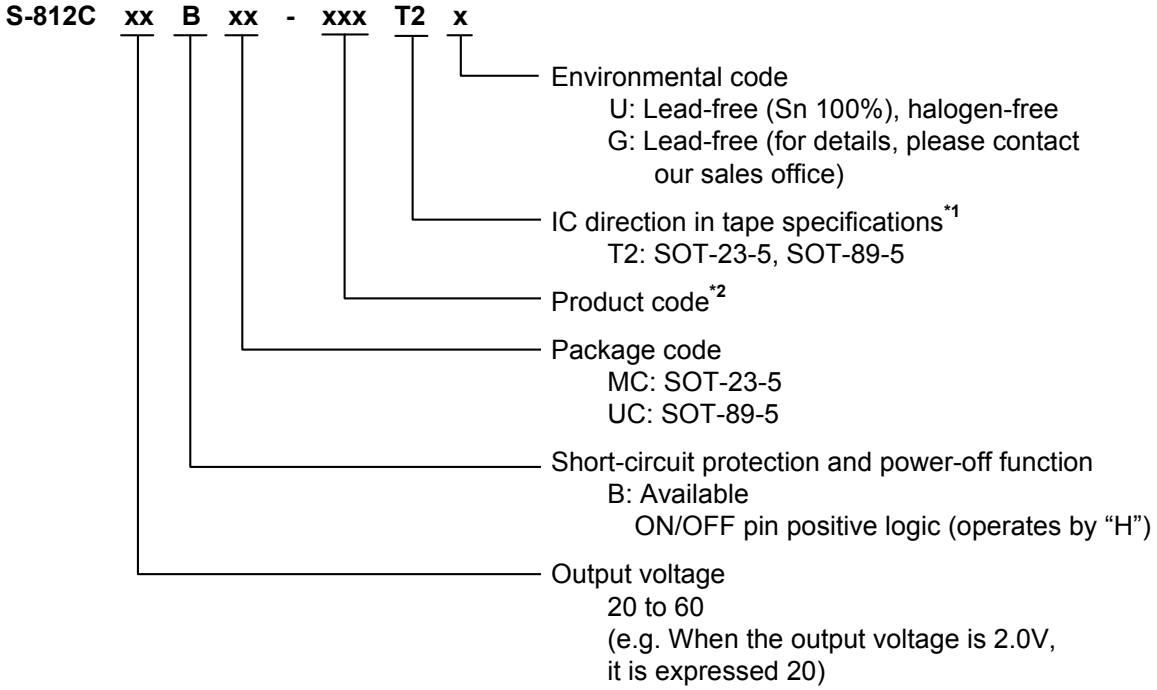

***1.** Refer to the tape drawing.
***2.** Refer to "**3. Product name list**".

1. 2. 3 WLP-4R

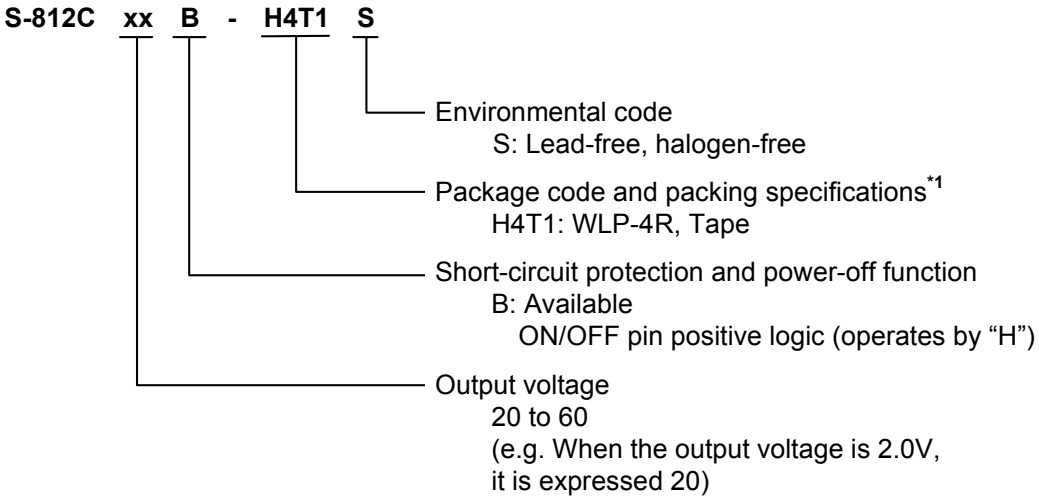

***1.** Refer to the tape drawing.

1. 3 S-812CxxE series

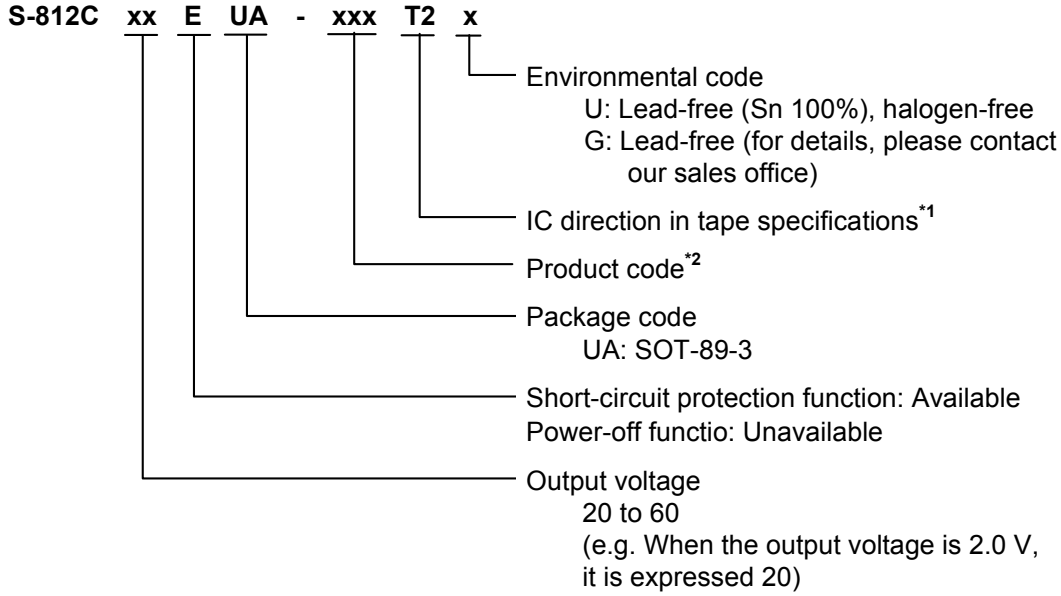

***1.** Refer to the tape drawing.
***2.** Refer to "**3. Product name list**".

2. Packages

Package name	Drawing code				
	Package	Tape	Reel	Ammo packing	Land
SNT-6A(H)	PI006-A-P-SD	PI006-A-C-SD	PI006-A-R-SD	—	PI006-A-L-SD
SOT-23-5	MP005-A-P-SD	MP005-A-C-SD	MP005-A-R-SD	—	—
SOT-89-3	UP003-A-P-SD	UP003-A-C-SD	UP003-A-R-SD	—	—
SOT-89-5	UP005-A-P-SD	UP005-A-C-SD	UP005-A-R-SD	—	—
TO-92 (Bulk)	YS003-D-P-SD	—	—	—	—
TO-92 (Tape and ammo)	YZ003-E-P-SD	YZ003-E-C-SD	—	YZ003-E-Z-SD	—
WLP-4R	HR004-A-P-SD	HR004-A-C-SD	HR004-A-R-SD	—	—

3. Product name list

3. 1 S-812CxxA Series (Unavailable short-circuit protection and power-off function)

Table 1

Output voltage	SOT-23-5	SOT-89-3	SOT-89-5	TO-92*1
2.0 V±2.0 %	S-812C20AMC-C2AT2x	S-812C20AUA-C2AT2x	—	S-812C20AY-n2-U
2.1 V±2.0 %	S-812C21AMC-C2BT2x	S-812C21AUA-C2BT2x	—	S-812C21AY-n2-U
2.2 V±2.0 %	S-812C22AMC-C2CT2x	S-812C22AUA-C2CT2x	—	S-812C22AY-n2-U
2.3 V±2.0 %	S-812C23AMC-C2DT2x	S-812C23AUA-C2DT2x	—	S-812C23AY-n2-U
2.4 V±2.0 %	S-812C24AMC-C2ET2x	S-812C24AUA-C2ET2x	—	S-812C24AY-n2-U
2.5 V±2.0 %	S-812C25AMC-C2FT2x	S-812C25AUA-C2FT2x	—	S-812C25AY-n2-U
2.6 V±2.0 %	S-812C26AMC-C2GT2x	S-812C26AUA-C2GT2x	—	S-812C26AY-n2-U
2.7 V±2.0 %	S-812C27AMC-C2HT2x	S-812C27AUA-C2HT2x	—	S-812C27AY-n2-U
2.8 V±2.0 %	S-812C28AMC-C2IT2x	S-812C28AUA-C2IT2x	—	S-812C28AY-n2-U
2.9 V±2.0 %	S-812C29AMC-C2JT2x	S-812C29AUA-C2JT2x	—	S-812C29AY-n2-U
3.0 V±2.0 %	S-812C30AMC-C2KT2x	S-812C30AUA-C2KT2x	—	S-812C30AY-n2-U
3.1 V±2.0 %	S-812C31AMC-C2LT2x	S-812C31AUA-C2LT2x	—	S-812C31AY-n2-U
3.2 V±2.0 %	S-812C32AMC-C2MT2x	S-812C32AUA-C2MT2x	—	S-812C32AY-n2-U
3.3 V±2.0 %	S-812C33AMC-C2NT2x	S-812C33AUA-C2NT2x	—	S-812C33AY-n2-U
3.4 V±2.0 %	S-812C34AMC-C2OT2x	S-812C34AUA-C2OT2x	—	S-812C34AY-n2-U
3.5 V±2.0 %	S-812C35AMC-C2PT2x	S-812C35AUA-C2PT2x	—	S-812C35AY-n2-U
3.6 V±2.0 %	S-812C36AMC-C2QT2x	S-812C36AUA-C2QT2x	—	S-812C36AY-n2-U
3.7 V±2.0 %	S-812C37AMC-C2RT2x	S-812C37AUA-C2RT2x	—	S-812C37AY-n2-U
3.8 V±2.0 %	S-812C38AMC-C2ST2x	S-812C38AUA-C2ST2x	—	S-812C38AY-n2-U
3.9 V±2.0 %	S-812C39AMC-C2TT2x	S-812C39AUA-C2TT2x	—	S-812C39AY-n2-U
4.0 V±2.0 %	S-812C40AMC-C2UT2x	S-812C40AUA-C2UT2x	—	S-812C40AY-n2-U
4.1 V±2.0 %	S-812C41AMC-C2VT2x	S-812C41AUA-C2VT2x	—	S-812C41AY-n2-U
4.2 V±2.0 %	S-812C42AMC-C2WT2x	S-812C42AUA-C2WT2x	—	S-812C42AY-n2-U
4.3 V±2.0 %	S-812C43AMC-C2XT2x	S-812C43AUA-C2XT2x	—	S-812C43AY-n2-U
4.4 V±2.0 %	S-812C44AMC-C2YT2x	S-812C44AUA-C2YT2x	—	S-812C44AY-n2-U
4.5 V±2.0 %	S-812C45AMC-C2ZT2x	S-812C45AUA-C2ZT2x	—	S-812C45AY-n2-U
4.6 V±2.0 %	S-812C46AMC-C3AT2x	S-812C46AUA-C3AT2x	—	S-812C46AY-n2-U
4.7 V±2.0 %	S-812C47AMC-C3BT2x	S-812C47AUA-C3BT2x	—	S-812C47AY-n2-U
4.8 V±2.0 %	S-812C48AMC-C3CT2x	S-812C48AUA-C3CT2x	—	S-812C48AY-n2-U
4.9 V±2.0 %	S-812C49AMC-C3DT2x	S-812C49AUA-C3DT2x	—	S-812C49AY-n2-U
5.0 V±2.0 %	S-812C50AMC-C3ET2x	S-812C50AUA-C3ET2x	—	S-812C50AY-n2-U
5.1 V±2.0 %	S-812C51AMC-C3FT2x	S-812C51AUA-C3FT2x	—	S-812C51AY-n2-U
5.2 V±2.0 %	S-812C52AMC-C3GT2x	S-812C52AUA-C3GT2x	—	S-812C52AY-n2-U
5.3 V±2.0 %	S-812C53AMC-C3HT2x	S-812C53AUA-C3HT2x	—	S-812C53AY-n2-U
5.4 V±2.0 %	S-812C54AMC-C3IT2x	S-812C54AUA-C3IT2x	—	S-812C54AY-n2-U
5.5 V±2.0 %	S-812C55AMC-C3JT2x	S-812C55AUA-C3JT2x	—	S-812C55AY-n2-U
5.6 V±2.0 %	S-812C56AMC-C3KT2x	S-812C56AUA-C3KT2x	—	S-812C56AY-n2-U
5.7 V±2.0 %	S-812C57AMC-C3LT2x	S-812C57AUA-C3LT2x	—	S-812C57AY-n2-U
5.8 V±2.0 %	S-812C58AMC-C3MT2x	S-812C58AUA-C3MT2x	—	S-812C58AY-n2-U
5.9 V±2.0 %	S-812C59AMC-C3NT2x	S-812C59AUA-C3NT2x	—	S-812C59AY-n2-U
6.0 V±2.0 %	S-812C60AMC-C3OT2x	S-812C60AUA-C3OT2x	—	S-812C60AY-n2-U

***1**. "n" changes according to the packing form in TO-92.
B: Bulk, Z: Tape and ammo.

Remark 1. Please contact our sales office for products with an output voltage value other than those specified above.
2. x: G or U
3. Please select products of environmental code = U for Sn 100%, halogen-free products.

3. 2 S-812CxxB Series (Available short-circuit protection and power-off function)

Table 2 (1 / 2)

Output voltage	SNT-6A(H)	SOT-23-5	SOT-89-5
2.0 V±2.0 %	S-812C20BPI-C4ATFU	S-812C20BMC-C4AT2x	—
2.1 V±2.0 %	S-812C21BPI-C4BTFU	S-812C21BMC-C4BT2x	—
2.2 V±2.0 %	S-812C22BPI-C4CTFU	S-812C22BMC-C4CT2x	—
2.3 V±2.0 %	S-812C23BPI-C4DTFU	S-812C23BMC-C4DT2x	—
2.4 V±2.0 %	S-812C24BPI-C4ETFU	S-812C24BMC-C4ET2x	—
2.5 V±2.0 %	S-812C25BPI-C4FTFU	S-812C25BMC-C4FT2x	—
2.6 V±2.0 %	S-812C26BPI-C4GTFU	S-812C26BMC-C4GT2x	—
2.7 V±2.0 %	S-812C27BPI-C4HTFU	S-812C27BMC-C4HT2x	—
2.8 V±2.0 %	S-812C28BPI-C4ITFU	S-812C28BMC-C4IT2x	—
2.9 V±2.0 %	S-812C29BPI-C4JTFU	S-812C29BMC-C4JT2x	—
3.0 V±2.0 %	S-812C30BPI-C4KTFU	S-812C30BMC-C4KT2x	—
3.1 V±2.0 %	S-812C31BPI-C4LTFU	S-812C31BMC-C4LT2x	—
3.2 V±2.0 %	S-812C32BPI-C4MTFU	S-812C32BMC-C4MT2x	—
3.3 V±2.0 %	S-812C33BPI-C4NTFU	S-812C33BMC-C4NT2x	S-812C33BUC-C4NT2x
3.4 V±2.0 %	S-812C34BPI-C4OTFU	S-812C34BMC-C4OT2x	—
3.5 V±2.0 %	S-812C35BPI-C4PTFU	S-812C35BMC-C4PT2x	—
3.6 V±2.0 %	S-812C36BPI-C4QTFU	S-812C36BMC-C4QT2x	—
3.7 V±2.0 %	S-812C37BPI-C4RTFU	S-812C37BMC-C4RT2x	—
3.8 V±2.0 %	S-812C38BPI-C4STFU	S-812C38BMC-C4ST2x	—
3.9 V±2.0 %	S-812C39BPI-C4TTFU	S-812C39BMC-C4TT2x	—
4.0 V±2.0 %	S-812C40BPI-C4UTFU	S-812C40BMC-C4UT2x	—
4.1 V±2.0 %	S-812C41BPI-C4VTFU	S-812C41BMC-C4VT2x	—
4.2 V±2.0 %	S-812C42BPI-C4WTFU	S-812C42BMC-C4WT2x	—
4.3 V±2.0 %	S-812C43BPI-C4XTFU	S-812C43BMC-C4XT2x	—
4.4 V±2.0 %	S-812C44BPI-C4YTFU	S-812C44BMC-C4YT2x	—
4.5 V±2.0 %	S-812C45BPI-C4ZTFU	S-812C45BMC-C4ZT2x	—
4.6 V±2.0 %	S-812C46BPI-C5ATFU	S-812C46BMC-C5AT2x	—
4.7 V±2.0 %	S-812C47BPI-C5BTFU	S-812C47BMC-C5BT2x	—
4.8 V±2.0 %	S-812C48BPI-C5CTFU	S-812C48BMC-C5CT2x	—
4.9 V±2.0 %	S-812C49BPI-C5DTFU	S-812C49BMC-C5DT2x	—
5.0 V±2.0 %	S-812C50BPI-C5ETFU	S-812C50BMC-C5ET2x	S-812C50BUC-C5ET2x
5.1 V±2.0 %	S-812C51BPI-C5FTFU	S-812C51BMC-C5FT2x	—
5.2 V±2.0 %	S-812C52BPI-C5GTFU	S-812C52BMC-C5GT2x	—
5.3 V±2.0 %	S-812C53BPI-C5HTFU	S-812C53BMC-C5HT2x	—
5.4 V±2.0 %	S-812C54BPI-C5ITFU	S-812C54BMC-C5IT2x	—
5.5 V±2.0 %	S-812C55BPI-C5JTFU	S-812C55BMC-C5JT2x	—
5.6 V±2.0 %	S-812C56BPI-C5KTFU	S-812C56BMC-C5KT2x	—
5.7 V±2.0 %	S-812C57BPI-C5LTFU	S-812C57BMC-C5LT2x	—
5.8 V±2.0 %	S-812C58BPI-C5MTFU	S-812C58BMC-C5MT2x	—
5.9 V±2.0 %	S-812C59BPI-C5NTFU	S-812C59BMC-C5NT2x	—
6.0 V±2.0 %	S-812C60BPI-C5OTFU	S-812C60BMC-C5OT2x	—

Remark 1. Please contact our sales office for products with an output voltage value other than those specified above.
2. x: G or U
3. Please select products of environmental code = U for Sn 100%, halogen-free products.

Table2 (2 / 2)

Output voltage	WLP-4R
3.3 V±2.0%	S-812C33B-H4T1S
4.0 V±2.0%	S-812C40B-H4T1S
5.0 V±2.0%	S-812C50B-H4T1S

Remark Please contact our sales office for products with an output voltage value other than those specified above.

3. 3 S-812CxxE Series (Available short-circuit protection function, unavailable power-off function)

Table 3

Output voltage	SOT-23-5	SOT-89-3	SOT-89-5	TO-92*1
3.3 V±2.0 %	—	S-812C33EUA-C5PT2x	—	—
3.6 V±2.0 %	—	S-812C36EUA-C5RT2x	—	—
4.0 V±2.0 %	—	S-812C40EUA-C5QT2x	—	—

***1**. "n" changes according to the packing form in TO-92.
B: Bulk, Z: Tape and ammo.

Remark 1. Please contact our sales office for products with an output voltage value other than those specified above.
2. x: G or U
3. Please select products of environmental code = U for Sn 100%, halogen-free products.

■ Pin Configurations

SNT-6A(H)
Top view

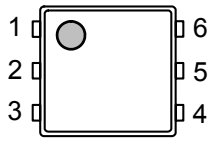

Figure 4

Table 4

Pin No.	Symbol	Description
1	NC*1	No connection
2	VIN	Input voltage pin
3	VOUT	Output voltage pin
4	VSS	GND pin
5	VIN	Input voltage pin
6	ON/OFF	ON/OFF pin

***1.** The NC pin is electrically open.
The NC pin can be connected to VIN pin or VSS pin.

SOT-23-5
Top view

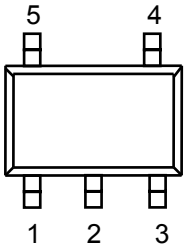

Figure 5

Table 5

Pin No.	Symbol	Description
1	VSS	GND pin
2	VIN	Input voltage pin
3	VOUT	Output voltage pin
4	NC*1	No connection
5	ON/OFF	ON/OFF pin (B type)
	NC*1	No connection (A type, E type)

***1**. The NC pin is electrically open.
The NC pin can be connected to VIN pin or VSS pin.

SOT-89-3
Top view

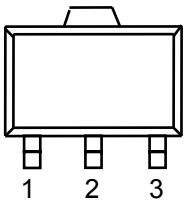

Figure 6

Table 6

Pin No.	Symbol	Description
1	VSS	GND pin
2	VIN	Input voltage pin
3	VOUT	Output voltage pin

SOT-89-5
Top view

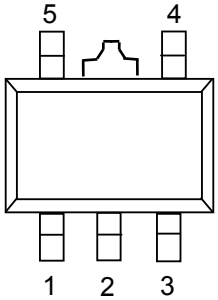

Figure 7

Table 7

Pin No.	Symbol	Description
1	VOUT	Output voltage pin
2	VIN	Input voltage pin
3	VSS	GND pin
4	ON/OFF	ON/OFF pin (B type)
	NC*1	No connection (A type, E type)
5	NC*1	No connection

***1**. The NC pin is electrically open.
The NC pin can be connected to VIN pin or VSS pin.

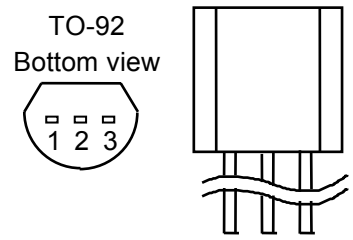

Figure 8

Table 8

Pin No.	Symbol	Description
1	VSS	GND pin
2	VIN	Input voltage pin
3	VOUT	Output voltage pin

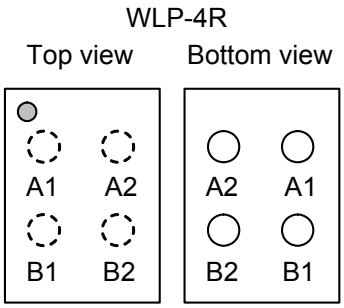

Figure 9

Table 9

Pin No.	Symbol	Description
A1	VOUT	Output voltage pin
B1	VIN	Input voltage pin
A2	VSS	GND pin
B2	ON/OFF	ON/OFF pin

■ Absolute Maximum Ratings

Table 10

(Ta=25°C unless otherwise specified)

Item		Symbol	Absolute Maximum Rating	Units
Input voltage		V_{IN}	V_{SS}–0.3 to V_{SS}+18	V
		$V_{ON/OFF}$	V_{SS}–0.3 to V_{IN}+0.3	V
Output voltage		V_{OUT}	V_{SS}–0.3 to V_{IN}+0.3	V
Power dissipation	SNT-6A(H)	P_D	500*1	mW
	SOT-23-5		250 (When not mounted on board)	mW
			600*1	mW
	SOT-89-3		500 (When not mounted on board)	mW
			1000*1	mW
	SOT-89-5		500 (When not mounted on board)	mW
			1000*1	mW
	TO-92		400 (When not mounted on board)	mW
			800*1	mW
Operation ambient temperature		T_{opr}	−40 to +85	°C
Storage temperature		T_{stg}	−40 to +125	°C

***1.** When mounted on board
[Mounted board]
(1) Board size : 114.3 mm × 76.2 mm × t1.6 mm
(2) Board name : JEDEC STANDARD51-7

Caution The absolute maximum ratings are rated values exceeding which the product could suffer physical damage. These values must therefore not be exceeded under any conditions.

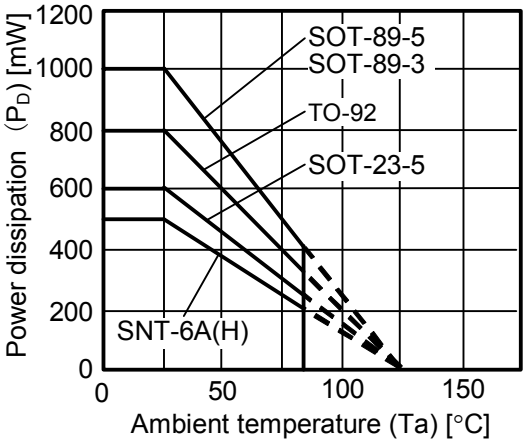

Figure 10 Power Dissipation of The Package (When mounted on Board)

■ Electrical Characteristics

Table 11

(Ta=25°C unless otherwise specified)

Item	Symbol	Conditions		Min.	Typ.	Max.	Units	Test circuits
Output voltage*1	$V_{OUT(E)}$	$V_{IN} = V_{OUT(S)} + 2V$, I_{OUT} = 10mA		$V_{OUT(S)} \times 0.98$	$V_{OUT(S)}$	$V_{OUT(S)} \times 1.02$	V	1
Output current*2	I_{OUT}	$V_{OUT(S)} + 2V \le V_{IN} \le 16V$	$2.0V \le V_{OUT(S)} \le 2.9V$	30	–	–	mA	3
			$3.0V \le V_{OUT(S)} \le 3.9V$	50	–	–	mA	3
			$4.0V \le V_{OUT(S)} \le 4.9V$	65	–	–	mA	3
			$5.0V \le V_{OUT(S)} \le 6.0V$	75	–	–	mA	3
Dropout voltage*3	V_{drop}	I_{OUT} = 10mA	$2.0V \le V_{OUT(S)} \le 2.4V$	–	0.46	0.95	V	1
			$2.5V \le V_{OUT(S)} \le 2.9V$	–	0.32	0.68	V	1
			$3.0V \le V_{OUT(S)} \le 3.4V$	–	0.23	0.41	V	1
			$3.5V \le V_{OUT(S)} \le 3.9V$	–	0.19	0.35	V	1
			$4.0V \le V_{OUT(S)} \le 4.4V$	–	0.16	0.30	V	1
			$4.5V \le V_{OUT(S)} \le 4.9V$	–	0.14	0.27	V	1
			$5.0V \le V_{OUT(S)} \le 5.4V$	–	0.12	0.25	V	1
			$5.5V \le V_{OUT(S)} \le 6.0V$	–	0.11	0.23	V	1
Line regulation 1	ΔV_{OUT1}	$V_{OUT(S)} + 1V \le V_{IN} \le 16V$, I_{OUT} = 1mA		–	5	20	mV	1
Line regulation 2	ΔV_{OUT2}	$V_{OUT(S)} + 1V \le V_{IN} \le 16V$, I_{OUT} = 1μA		–	5	20	mV	1
Load regulation	ΔV_{OUT3}	$V_{IN} = V_{OUT(S)} + 2V$	$2.0V \le V_{OUT(S)} \le 2.9V$, $1\mu A \le I_{OUT} \le 20mA$	–	6	30	mV	1
			$3.0V \le V_{OUT(S)} \le 3.9V$, $1\mu A \le I_{OUT} \le 30mA$	–	10	45	mV	1
			$4.0V \le V_{OUT(S)} \le 4.9V$, $1\mu A \le I_{OUT} \le 40mA$	–	13	65	mV	1
			$5.0V \le V_{OUT(S)} \le 6.0V$, $1\mu A \le I_{OUT} \le 50mA$	–	17	80	mV	1
Output voltage temperature coefficient*4	$\frac{\Delta V_{OUT}}{\Delta Ta \bullet V_{OUT}}$	$V_{IN} = V_{OUT(S)} + 1V$, I_{OUT} = 10mA, $-40°C \le Ta \le 85°C$		–	±100	–	ppm/°C	1
Current consumption	I_{SS}	$V_{IN} = V_{OUT(S)} + 2V$, no load	$2.0V \le V_{OUT(S)} \le 2.7V$	–	0.9	1.6	μA	2
			$2.8V \le V_{OUT(S)} \le 3.7V$	–	1.0	1.8	μA	2
			$3.8V \le V_{OUT(S)} \le 5.1V$	–	1.2	2.1	μA	2
			$5.2V \le V_{OUT(S)} \le 6.0V$	–	1.5	2.5	μA	2
Input voltage	V_{IN}	–		–	–	16	V	1
Applied to products with power-off function								
Current consumption during power-off	I_{SS2}	$V_{IN} = V_{OUT(S)} + 2V$, $V_{ON/OFF}$ = 0V, no load		–	0.1	0.5	μA	2
ON/OFF pin input voltage "H"	V_{SH}	$V_{IN} = V_{OUT(S)} + 2V$, R_L = 1kΩ, determined by V_{OUT} output level		2.0	–	–	V	4
ON/OFF pin input voltage "L"	V_{SL}	$V_{IN} = V_{OUT(S)} + 2V$, R_L = 1kΩ, determined by V_{OUT} output level		–	–	0.4	V	4
ON/OFF pin input current "H"	I_{SH}	V_{IN} = 7V, $V_{ON/OFF}$ = 7V		-0.1	–	0.1	μA	4
ON/OFF pin input current "L"	I_{SL}	$V_{IN} = V_{OUT(S)} + 2V$, $V_{ON/OFF}$ = 0V		-0.1	–	0.1	μA	4
Applied to products with short-circuit protection function								
Short-circuit current	I_{OS}	$V_{IN} = V_{OUT(S)} + 2V$, V_{OUT} = 0V		–	40	–	mA	3

***1.** $V_{OUT(S)}$: Set output voltage
$V_{OUT(E)}$: Actual output voltage
Output voltage when fixing I_{OUT}(=10 mA) and inputting $V_{OUT(S)}$+2.0V.

***2.** The output current at which the output voltage becomes 95% of $V_{OUT(E)}$ after gradually increasing the output current.

***3.** $V_{drop} = V_{IN1} - (V_{OUT(E)} \times 0.98)$
V_{IN1} is the input voltage at which the output voltage becomes 98% of $V_{OUT(E)}$ after gradually decreasing the input voltage.

***4.** A change in the temperature of the output voltage [mV/°C] is calculated using the following equation.

$$\frac{\Delta V_{OUT}}{\Delta Ta}\ [mV/°C]^{*1} = V_{OUT(S)}\ [V]^{*2} \times \frac{\Delta V_{OUT}}{\Delta Ta \bullet V_{OUT}}\ [ppm/°C]^{*3} \div 1000$$

***1.** Change in temperature of output voltage
***2.** Set output voltage
***3.** Output voltage temperature coefficient

■ Test Circuits

1.

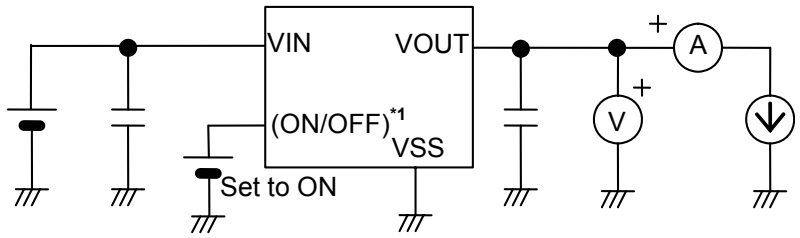

Figure 11

2.

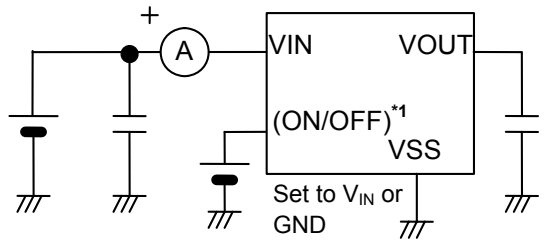

Figure 12

3.

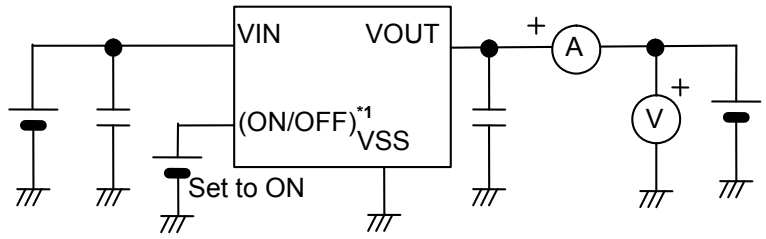

Figure 13

4.

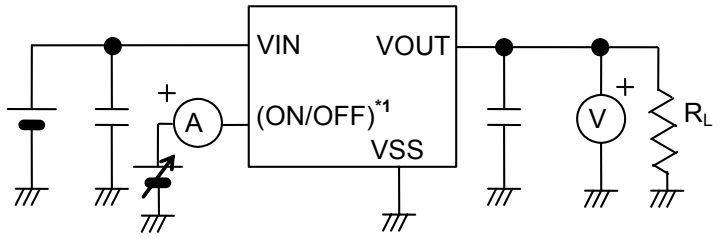

Figure 14

***1.** In case of product with power-off function.

■ Standard Circuit

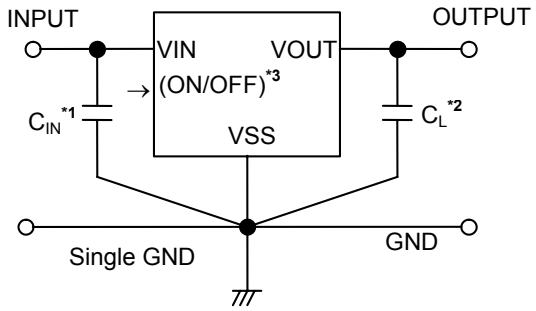

***1.** C_{IN} is a capacitor for stabilizing the input.
***2.** In addition to tantalum capacitor, ceramic capacitor can be used for C_L.
***3.** Control this ON/OFF pin in the product with power-off function.

Figure 15

Caution The above connection diagram and constant will not guarantee successful operation. Perform through evaluation using the actual application to set the constant.

■ Explanation of Terms

1. Output capacitor (C_L)

Generally in voltage regulator, output capacitor is used to stabilize regulation and to improve the characteristics of transient response. The S-812C Series operates stably without output capacitor C_L. Thus the output capacitor C_L is used only for improvement of the transient response. In the applications that users will use the S-812C Series, and they are not cautious about the transient response, it is possible to omit an output capacitor. If using an output capacitor for this IC, users are able to use devices such as ceramic capacitor which has small ESR (Equivalent Series Resistance).

2. Output voltage (V_{OUT})

The accuracy of the output voltage ± 2.0% is assured under the specified conditions for input voltage, which differs depending upon the product items, output current, and temperature.

Caution If the above conditions change, the output voltage value may vary and go out of the accuracy range of the output voltage. Refer to "■ Electrical Characteristics" and "■ Characteristics (Typical Data)" for details.

3. Line regulations 1 and 2 (ΔV_{OUT1}, ΔV_{OUT2})

Indicate the dependency of the output voltage against the input voltage. That is, the value shows how much the output voltage changes due to a change in the input voltage after fixing output current constant.

4. Load regulation (ΔV_{OUT3})

Indicates the dependency of the output voltage against the output current. That is, the value shows how much the output voltage changes due to a change in the output current after fixing output current constant.

5. Dropout voltage (V_{drop})

Indicates the difference between input voltage (V_{IN1}) and the output voltage when; decreasing input voltage (V_{IN}) gradually until the output voltage has dropped out to the value of 98% of the actual output voltage ($V_{OUT(E)}$).

$V_{drop} = V_{IN1} - (V_{OUT(E)} \times 0.98)$

6. Output voltage temperature coefficient $\left(\frac{\Delta V_{OUT}}{\Delta Ta \bullet V_{OUT}}\right)$

The shaded area in **Figure 16** is the range where V_{OUT} varies in the operation temperature range when the output voltage temperature coefficient is ±100 ppm/°C.

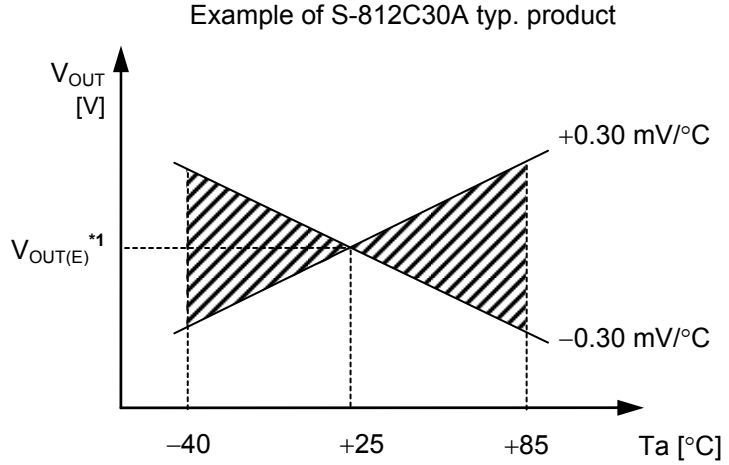

***1.** $V_{OUT(E)}$ is the value of the output voltage measured at Ta = +25°C.

Figure 16

A change in the temperature of the output voltage [mV/°C] is calculated using the following equation.

$$\frac{\Delta V_{OUT}}{\Delta Ta}\ [\text{mV/°C}]^{*1} = V_{OUT(S)}\ [\text{V}]^{*2} \times \frac{\Delta V_{OUT}}{\Delta Ta \bullet V_{OUT}}\ [\text{ppm/°C}]^{*3} \div 1000$$

***1.** Change in temperature of output voltage
***2.** Set output voltage
***3.** Output voltage temperature coefficient

■ Operation

1. Basic operation

Figure 17 shows the block diagram of the S-812C Series.
The error amplifier compares the reference voltage (V_{ref}) with feedback voltage (V_{fb}), which is the output voltage resistance-divided by feedback resistors (R_s and R_f). It supplies the gate voltage necessary to maintain the constant output voltage which is not influenced by the input voltage and temperature change, to the output transistor.

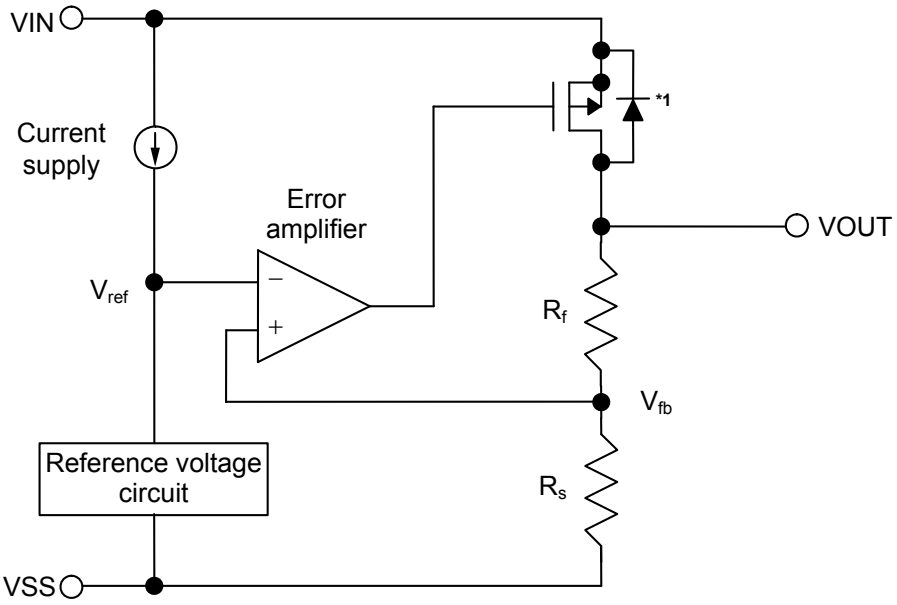

***1**. Parasitic diode

Figure 17

2. Output transistor

In the S-812C Series, a low on-resistance P-channel MOS FET is used as the output transistor. Be sure that V_{OUT} does not exceed V_{IN} + 0.3 V to prevent the voltage regulator from being damaged due to reverse current flowing from the VOUT pin through a parasitic diode to the VIN pin, when the potential of V_{OUT} became higher than V_{IN}.

3. ON/OFF pin

This pin starts and stops the regulator.
When the ON/OFF pin is set to OFF level, the entire internal circuit stops operating, and the built-in P-channel MOS FET output transistor between the VIN pin and the VOUT pin is turned off, reducing current consumption significantly. The VOUT pin becomes the V_{SS} level due to the internally divided resistance of several MΩ between the VOUT pin and the VSS pin.
The structure of the ON/OFF pin is as shown in **Figure 18.** Since the ON/OFF pin is neither pulled down nor pulled up internally, do not use it in the floating status. Note that if applying the voltage of V_{IN} + 0.3 V or more, the current flows to V_{IN} via a parasitic diode in the IC.
When not using the ON/OFF pin in the product with the power-off function, connect the ON/OFF pin to the VIN pin (in positive logic), or to the VSS pin (in negative logic).
The output voltage may increase by stopping regulation when a lower current (100 μA or less) is applied.
If the output voltage increased during power-off, pull the VOUT pin down to the VSS pin and set the ON/OFF pin to the power-down level.

Table 12

Product Type	ON/OFF Pin	Internal Circuit	VOUT Pin Voltage	Current Consumption
B	"L": OFF	Stop	V_{SS} level	I_{SS2}
B	"H": ON	Operate	Set value	I_{SS}

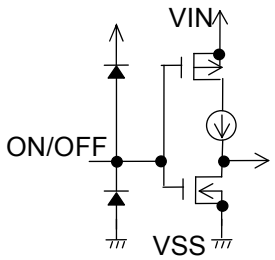

Figure 18

4. Short-circuit protection circuit

In the S-812C Series, users are able to select whether to set the short circuit protection, which protects the output capacitor from short-circuiting between the VOUT pin and the VSS pin.
The short circuit protection circuit controls the output current against voltage V_{OUT}, as seen in "■ **Characteristics (Typical Data)**", "**1. Output Voltage vs Output Current (When load current increases)**", and limits the output current at approx. 40 mA even if the VOUT pin and the VSS pins are short-circuited.
However, this short circuit protection circuit does not work as for thermal protection. Pay attention to the conditions of input voltage and load current so that, under the usage condition including short circuit, the loss of the IC will not exceed power dissipation of the package.
Even if pins are not short-circuited, this protection circuit works to limit the current to the specified value, in order to protect the output capacitor, when the output current and the potential difference between input and output voltages increase.
In the product without the short circuit protection circuit, the S-812C Series allows the relatively larger current because this protection circuit is detached.

■ Selection of External Components

1. Output capacitor (C_L)

The S-812C Series has an internal phase compensation circuit which stabilizes the operation regardless of the change of output load. Therefore it is possible for users to have a stable operation without an output capacitor (C_L). However, the values of output overshoot and undershoot, which are the characteristics of transient response, vary depending on the output capacitor. In selecting the value of output capacitor, refer to the data on C_L dependency in "■ **Reference data**", "**1. Transient response characteristics (Typical data: Ta=25 °C)**".
Set ESR 10 Ω or less when using a tantalum capacitor or an aluminum electrolytic capacitor. Pay attention at low temperature, that aluminum electrolytic capacitor especially may oscillate because ESR increases. Evaluate sufficiently including the temperature characteristics in use.

■ Application Circuit

1. Output current boost circuit

As shown in **Figure 19,** the output current can be boosted by externally attaching a PNP transistor.
Between the input voltage V_{IN} and the VIN pin (for power supply) in the S-812C Series, if setting the base-emitter voltage VBE which fully switches the PNP transistor on, S-812C Series controls the base current in a PNP transistor so that the output voltage V_{OUT} reaches the level of voltage which is set by the S-812C Series.
Since the output current boosting circuit in **Figure 19** does not have the good characteristics of transient response, under the usage condition, confirm if output fluctuation due to power-on, and fluctuations of power supply and load affect on the operation or not before use.
Note that the short-circuit protection circuit in the S-812C Series does not work as short-circuit protection for this boost circuit.

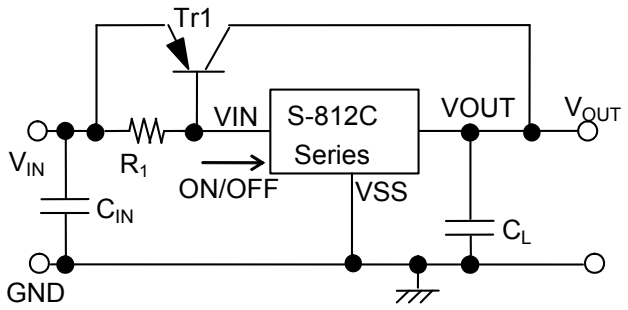

Figure 19

2. Constant current circuit

This circuit can be used as a constant current circuit if making the composition seen in **Figure 20** and **21**. Constant current I_O is calculated from the following equation ($V_{OUT(E)}$ = actual output voltage):

$I_o = (V_{OUT(E)} \div R_L) + I_{ss}$

Note that by using a circuit in **Figure 20**, it is impossible to set the better driving ability to the constant amperage (I_O) than the S-812C Series basically has.
To gain the driving ability which exceeds the S-812C Series, there's a way to combine a constant current circuit and a current boosting circuit, as seen in **Figure 21**.
The maximum input voltage for a constant current circuit is 16 V + the voltage for device (V_O).
It is not recommended to add a capacitor between the VIN pin (power supply) and the VSS pin or the VOUT pin (output) and the VSS pin because the rush current flows at power-on.

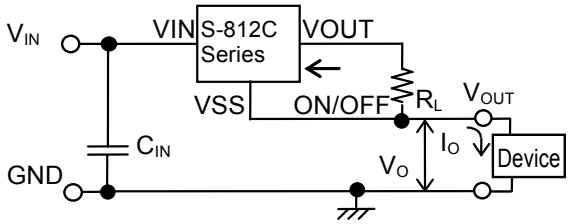

Figure 20 Constant Current Circuit

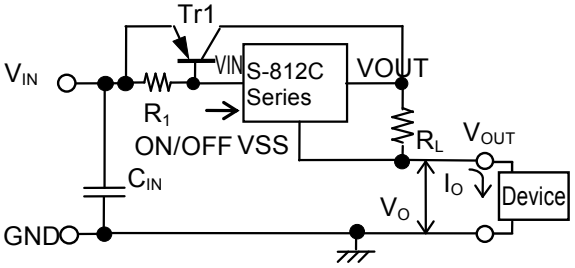

Figure 21 Constant Current Boost Circuit

3. Output voltage adjustment circuit
(Only for S-812CxxA Series (Unavailable short-circuit protection and power-off function))

By using the composition seen in **Figure 22**, users are able to increase the output voltage. The value of output voltage V_{OUT1} is calculated from the following equation ($V_{OUT(E)}$ = actual output voltage):

$V_{OUT1} = V_{OUT(E)} \times (R_1 + R_2) \div R_1 + R_2 \times I_{SS}$

Set the value of resistors R1 and R2 so that the S-812C Series is not affected by current consumption I_{SS}.
Capacitor C_1 reduces output fluctuation due to power-on, power fluctuation and load fluctuation. Set the value according to the actual evaluation.
It is not recommended to add a capacitor between the VIN pin (power supply) and the VSS pin or the VOUT pin (output) and the VSS pin because it causes output fluctuation and output oscillation due to power-on.

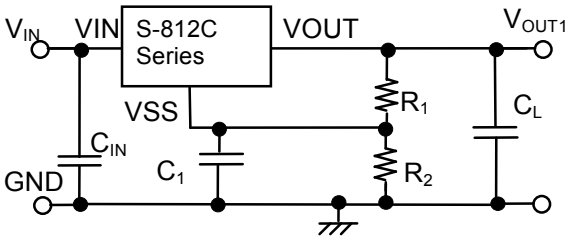

Figure 22

■ Precautions

- Wiring patterns for the VIN pin, the VOUT pin and GND should be designed so that the impedance is low. When mounting an output capacitor between the VOUT pin and the VSS pin (C_L) and a capacitor for stabilizing the input between the VIN pin and the VSS pin (C_{IN}), the distance from the capacitors to these pins should be as short as possible.
- Note that generally the output voltage may increase when a series regulator is used at low load current (1 μA or less).
- At low load current (100 μA or less) output voltage may increase when the regulating operation is halted by the ON/OFF pin.
- Generally a series regulator may cause oscillation, depending on the selection of external parts. The following conditions are recommended for the S-812C Series. However, be sure to perform sufficient evaluation under the actual usage conditions for selection, including evaluation of temperature characteristics.

  Equivalent Series Resistance (ESR): 10 Ω or less (in case of using output capacitor)
  Input series resistance (R_{IN}): 10 Ω or less

- The voltage regulator may oscillate when the impedance of the power supply is high and the input capacitance is small or an input capacitor is not connected.
- Overshoot may occur in the output voltage momentarily if the voltage is rapidly raised at power-on or when the power supply fluctuates. Sufficiently evaluate the output voltage at power-on with the actual device.
- The application conditions for the input voltage, the output voltage, and the load current should not exceed the package power dissipation.
- Do not apply an electrostatic discharge to this IC that exceeds the performance ratings of the built-in electrostatic protection circuit.
- ABLIC Inc. claims no responsibility for any disputes arising out of or in connection with any infringement by products including this IC of patents owned by a third party.

■ Precautions for WLP package

- The side of device silicon substrate is exposed to the marking side of device package. Since this portion has lower strength against the mechanical stress than the standard plastic package, chip, crack, etc should be careful of the handing of a package enough. Moreover, the exposed side of silicon has electrical potential of device substrate, and needs to be kept out of contact with the external potential.
- In this package, the overcoat of the resin of translucence is carried out on the side of device area. Keep it mind that it may affect the characteristic of a device when exposed a device in the bottom of a high light source.

■ Characteristics (Typical Data)

1. Output Voltage vs Output Current (When load current increases)

S-812C20B (Ta=25°C) Short- circuit protection

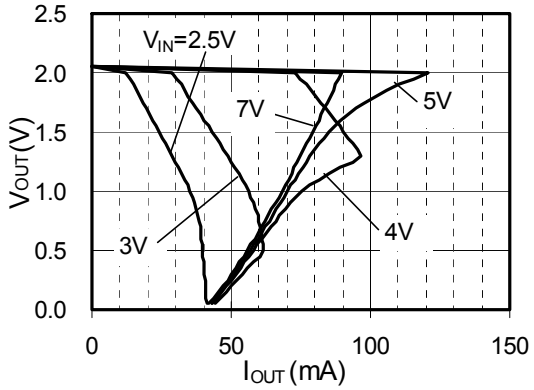

S-812C30B (Ta=25°C) Short-circuit protection

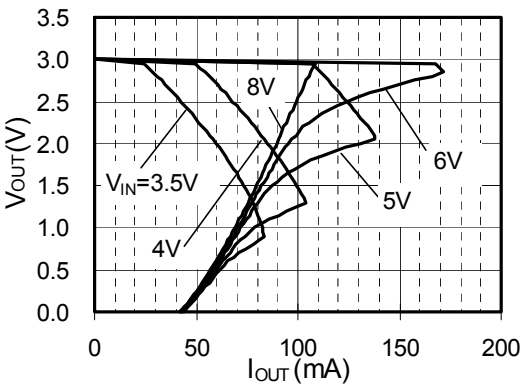

S-812C50B (Ta=25°C) Short-circuit protection

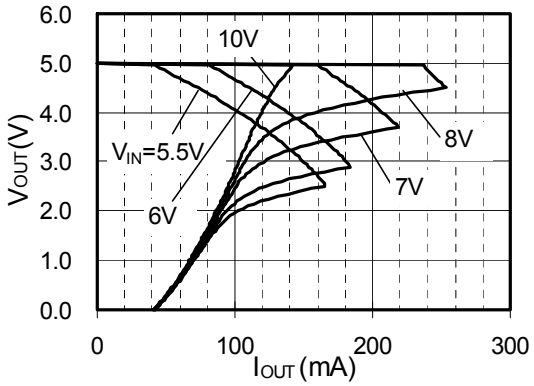

S-812C20A (Ta=25ºC) No short-circuit protection

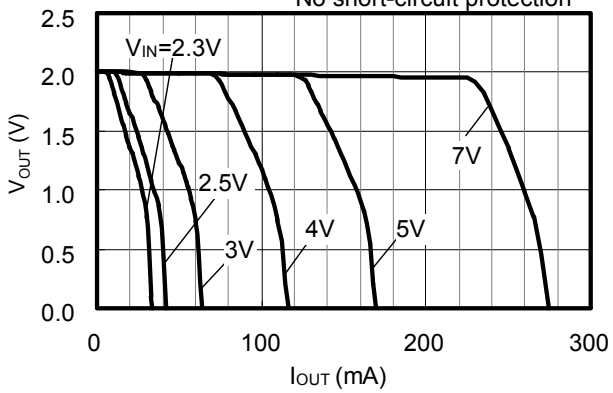

S-812C30A (Ta=25ºC) No short-circuit protection

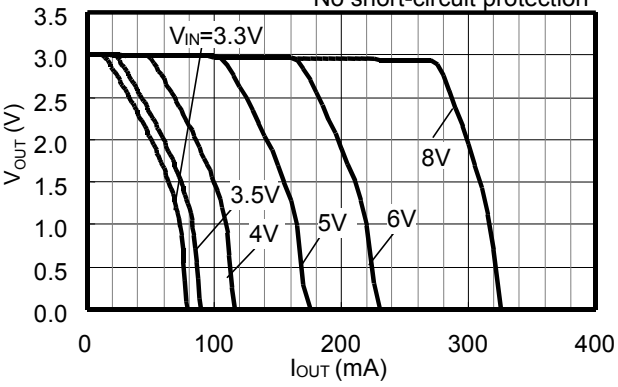

S-812C50A (Ta=25ºC) No short-circuit protection

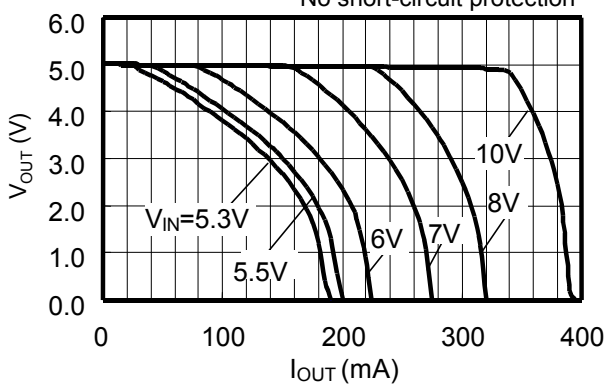

2. Maximum Output Current vs Input Voltage

S-812C20B Short-circuit protection

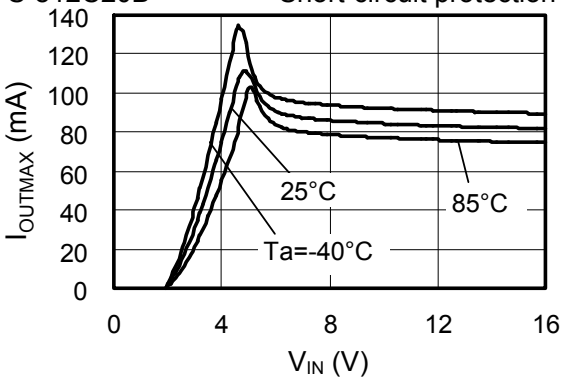

S-812C30B Short-circuit protection

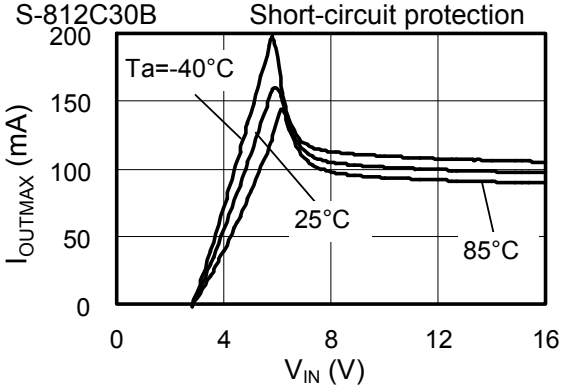

S-812C50B Short-circuit protection

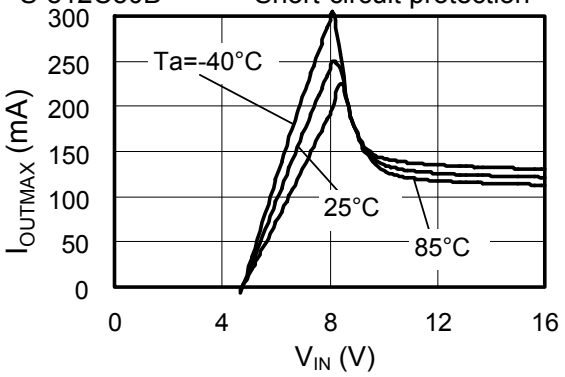

S-812C20A No short-circuit protection

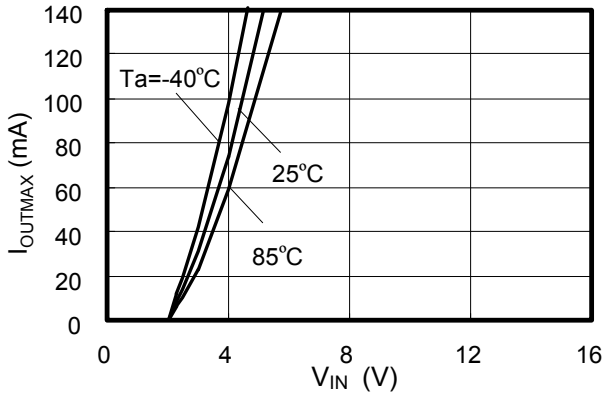

S-812C30A No short-circuit protection

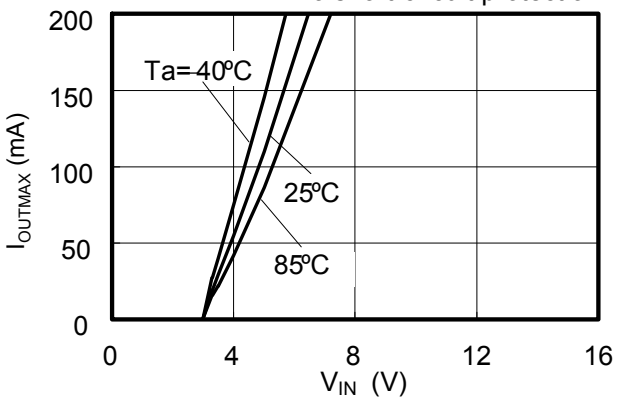

S-812C50A No short-circuit protection

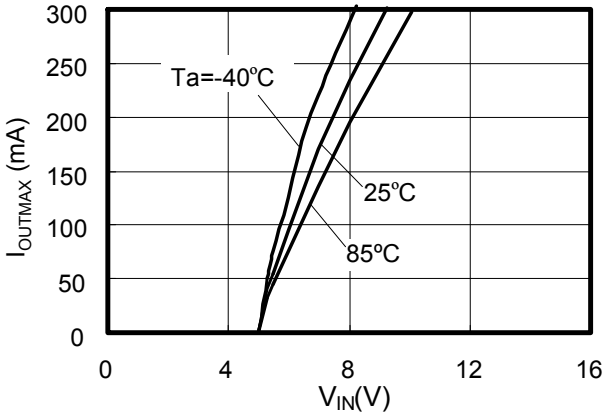

3. Output Current vs. Input Voltage

S-812C20B (Ta=25°C)

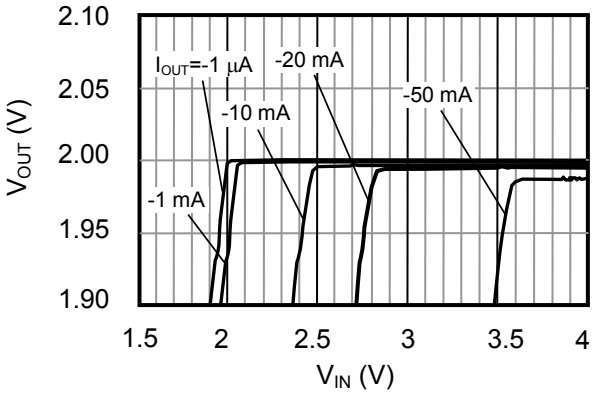

S-812C30B (Ta=25°C)

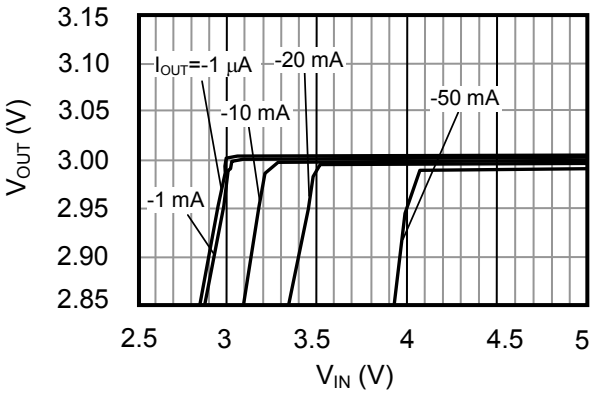

S-812C50B (Ta=25°C)

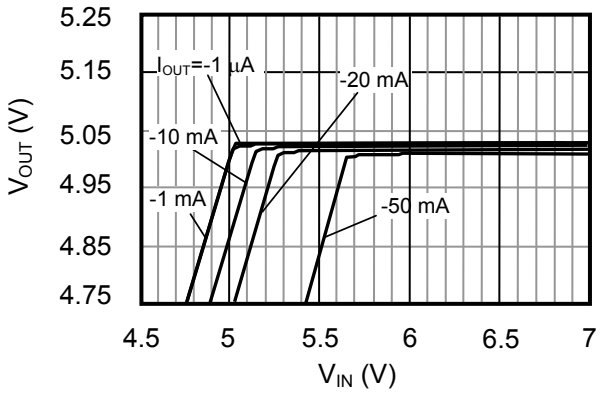

4. Dropout Voltage vs Output Current

S-812C20B

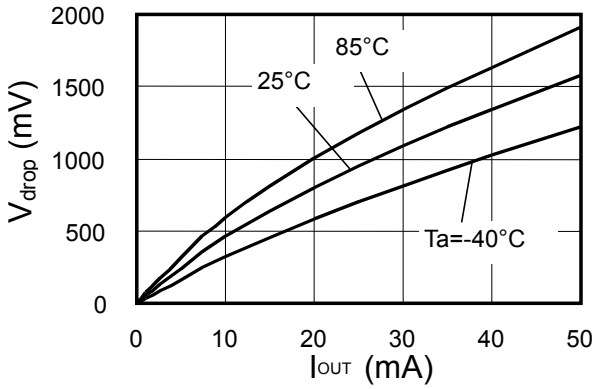

S-812C30B

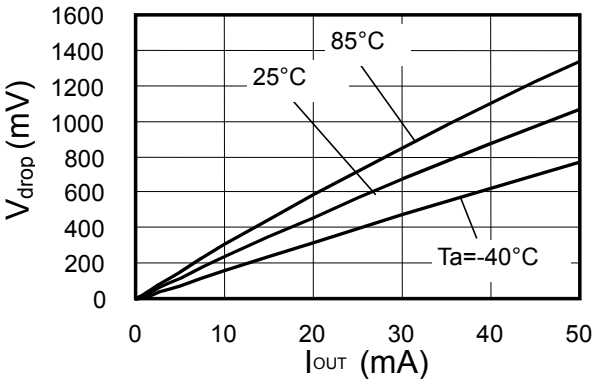

S-812C50B

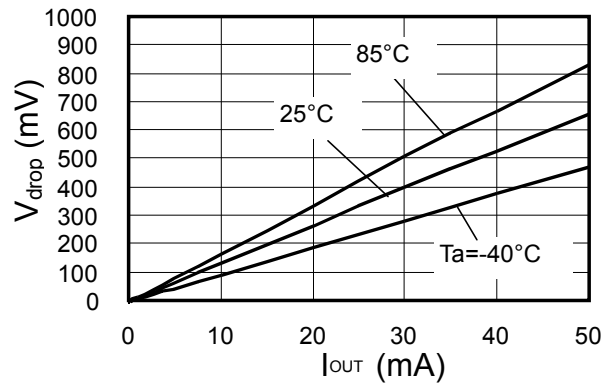

5. Output Voltage vs Ambient Temperature

S-812C20B

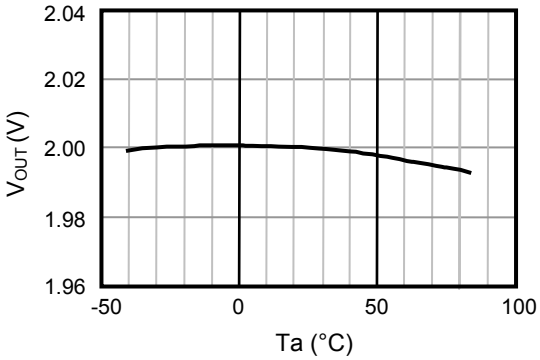

S-812C30B

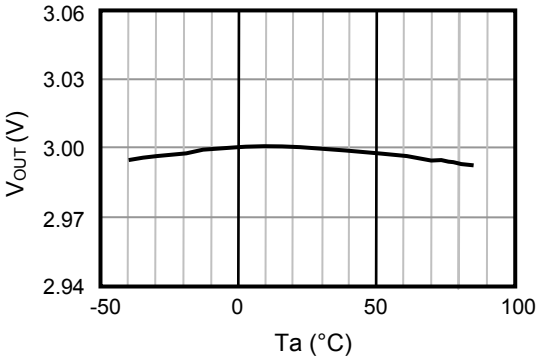

S-812C50B

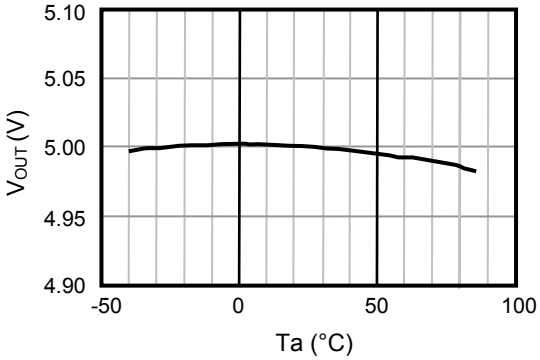

6. Line Regulation 1 vs Ambient Temperature

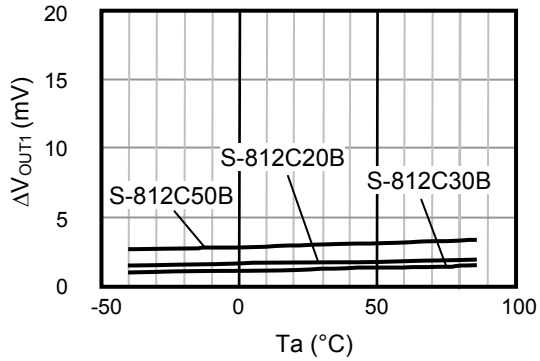

7. Line Regulation 2 vs Ambient Temperature

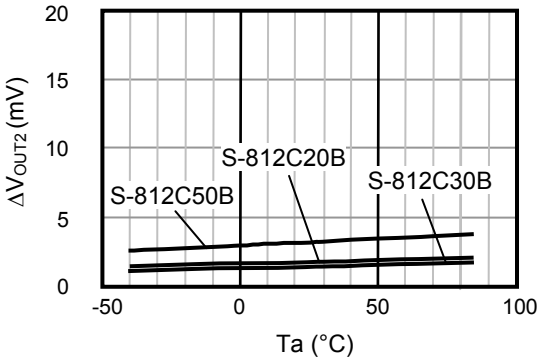

8. Load Regulation vs Ambient Temperature

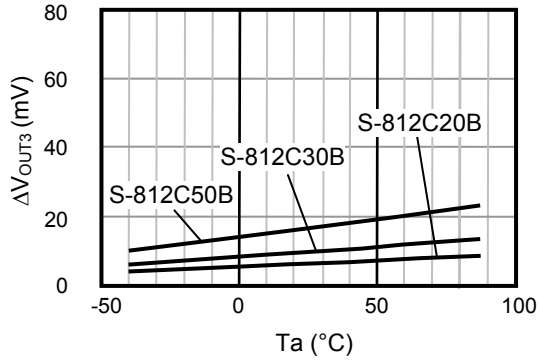

9. Current Consumption vs Input Voltage

S-812C20B

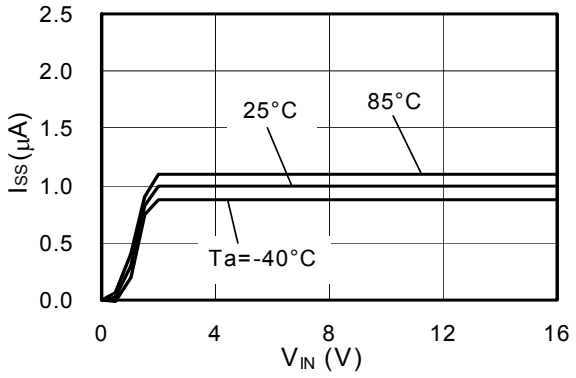

S-812C30B

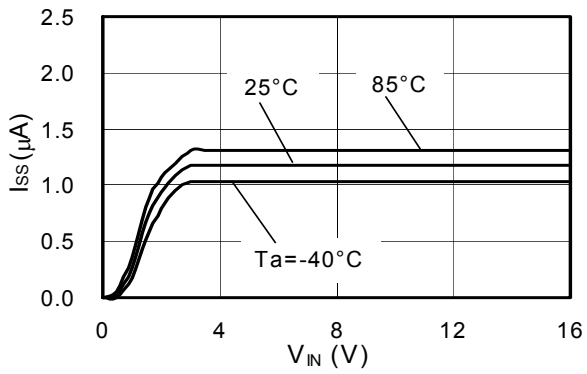

S-812C50B

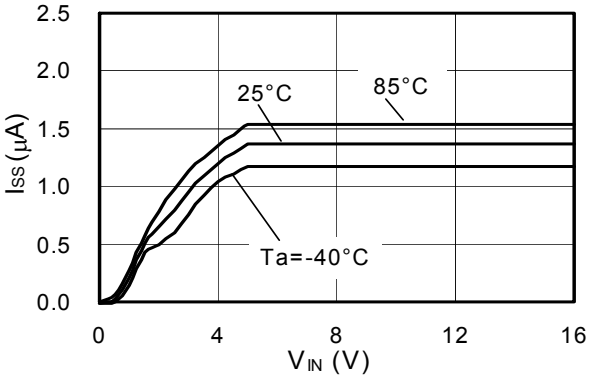

10. ON/OFF Pin Input Threshold vs Input Voltage

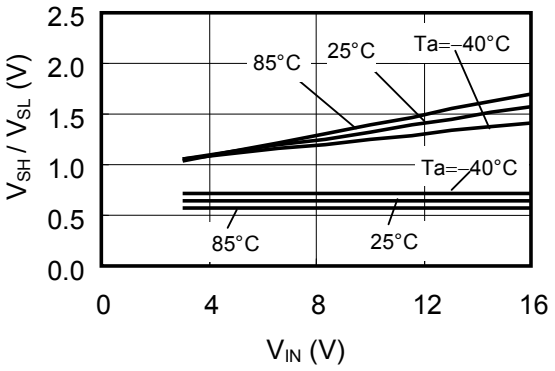

■ Reference Data

1. Transient Response Characteristics (Typical data: Ta=25 °C)

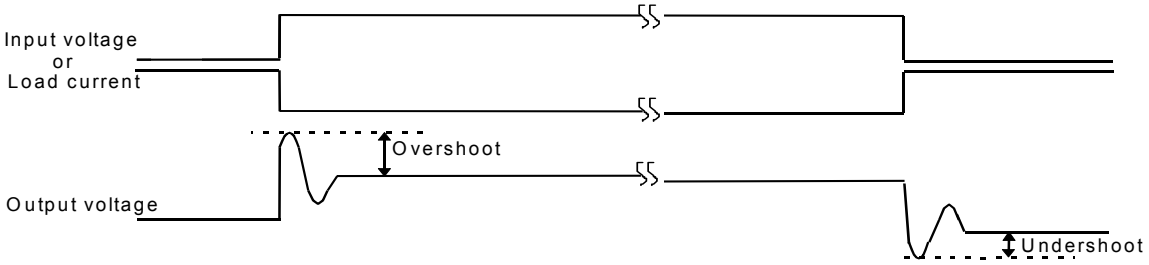

1-1. Power-on : S-812C30B (C_L=10μF; ceramic capacitor)

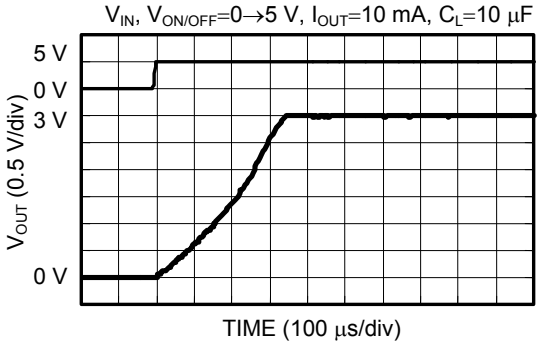

Load dependency of overshoot at power-on

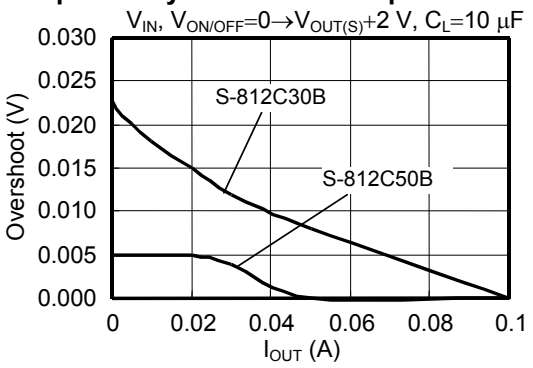

C_L dependency of overshoot at power-on

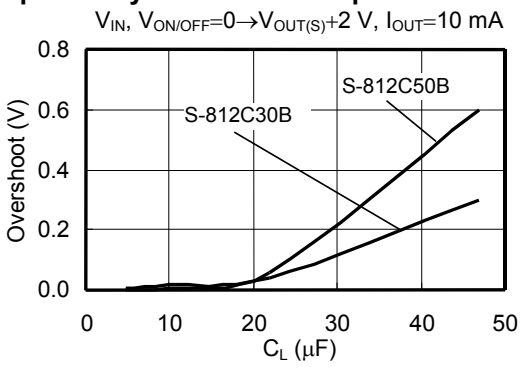

V_{DD} dependency of overshoot at power-on

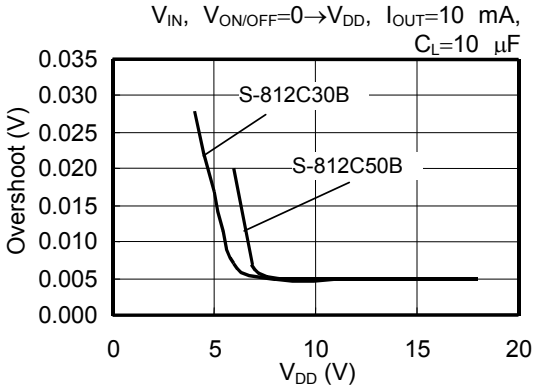

"Ta" dependency of overshoot at power-on

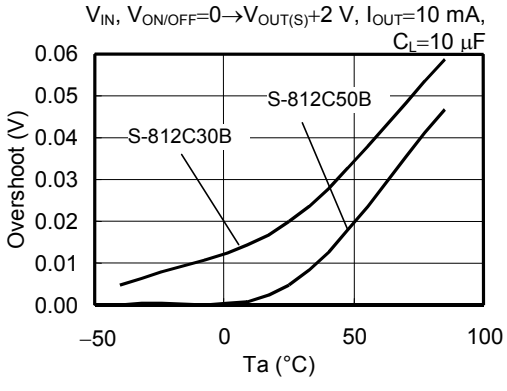

1-2. ON/OFF pin : S-812C30A (C_L=10μF; ceramic capacitor)

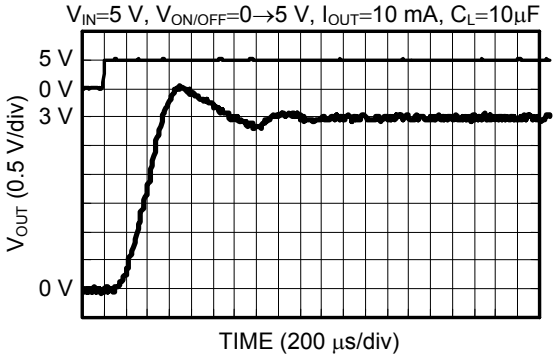

load dependency of overshoot with ON/OFF pin

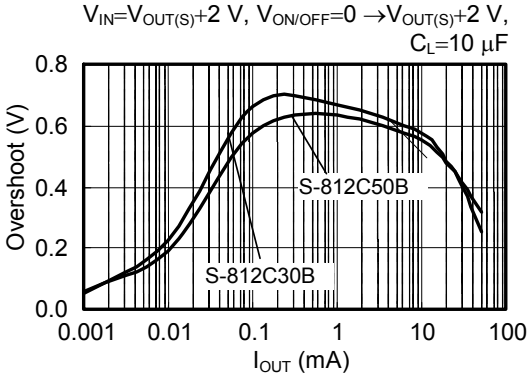

C_L dependency of overshoot with ON/OFF pin

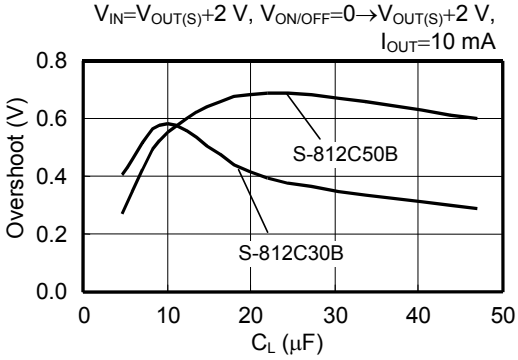

V_{DD} dependency of overshoot with ON/OFF pin

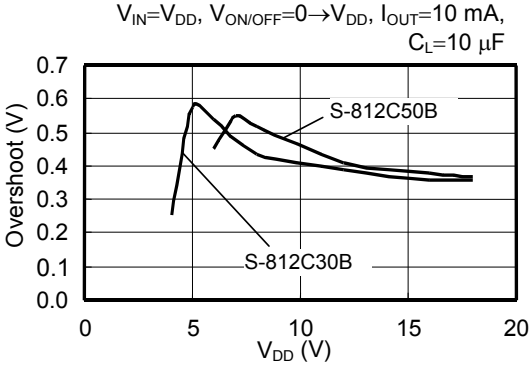

"Ta" dependency of overshoot with ON/OFF pin

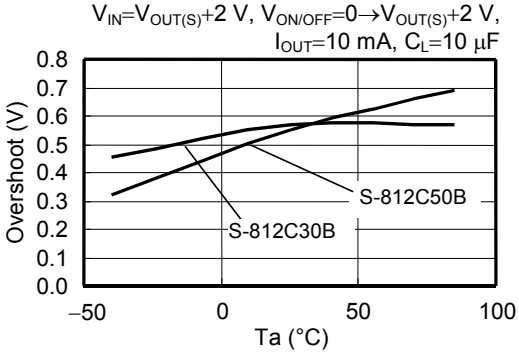

1-3. Power supply fluctuates: S-812C30B (C_L=10μF; ceramic capacitor)

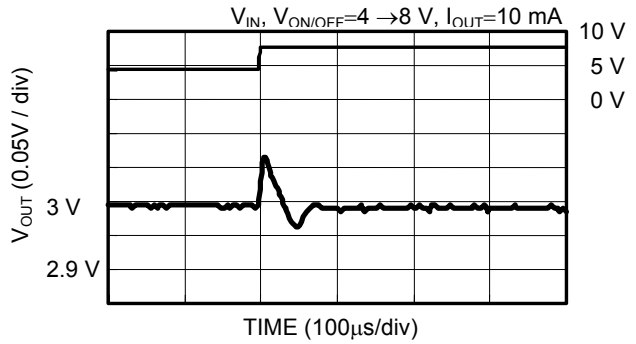

Load dependency of overshoot at power supply fluctuates

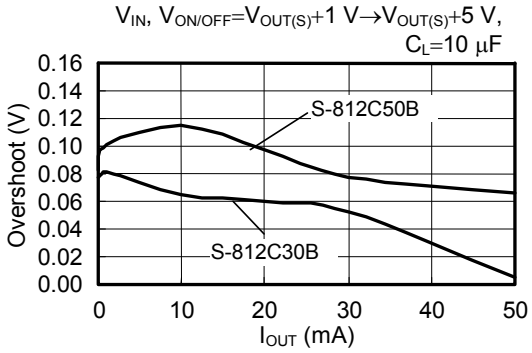

C_L dependency of overshoot at power supply fluctuates

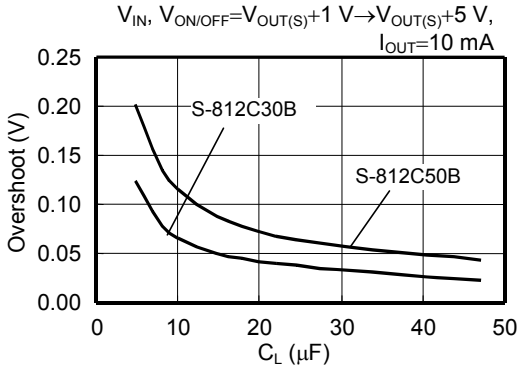

V_{DD} dependency of overshoot at power supply fluctuates

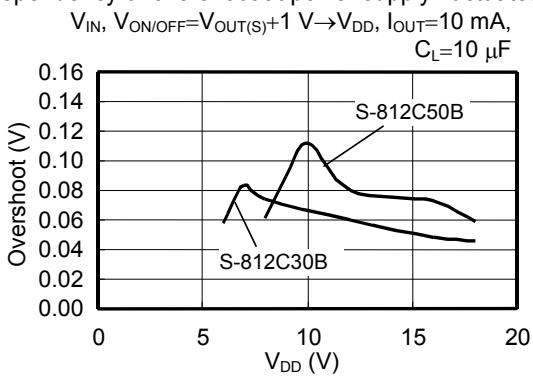

"Ta" dependency of overshoot at power supply fluctuates

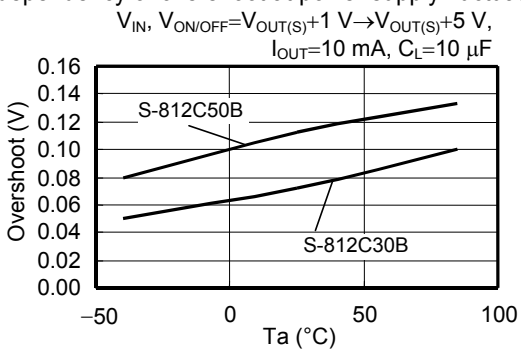

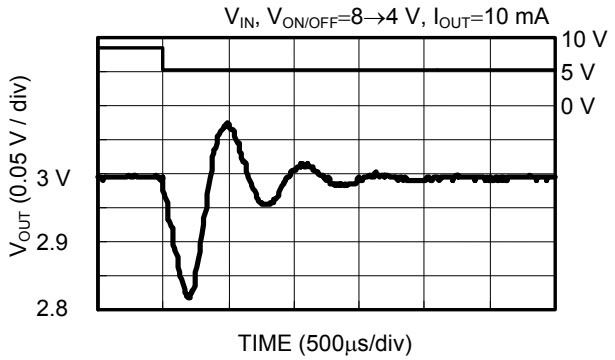

Load dependency of undershoot at power supply fluctuates

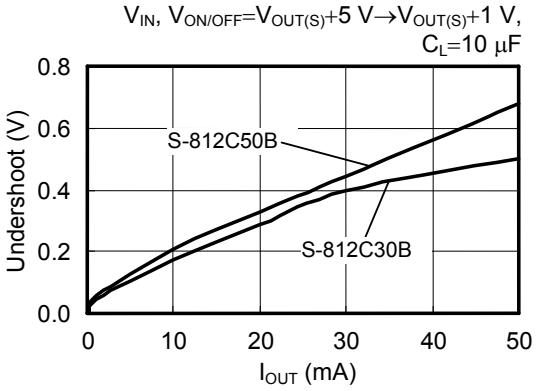

C_L dependency of undershoot at power supply fluctuates

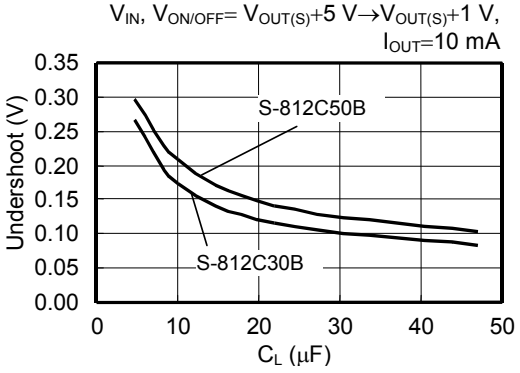

V_{DD} dependency of undershoot at power supply fluctuates

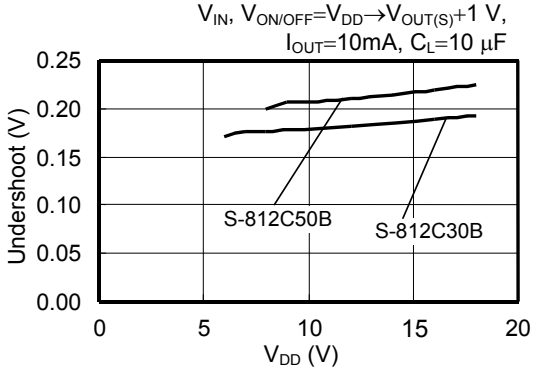

"Ta" dependency of undershoot at power supply fluctuates

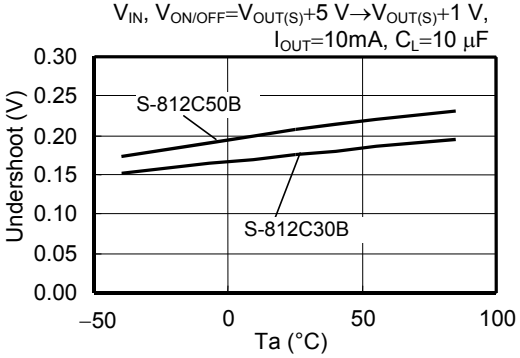

1-4. Load fluctuation: S-812C30B (C_L=10μF; ceramic capacitor)

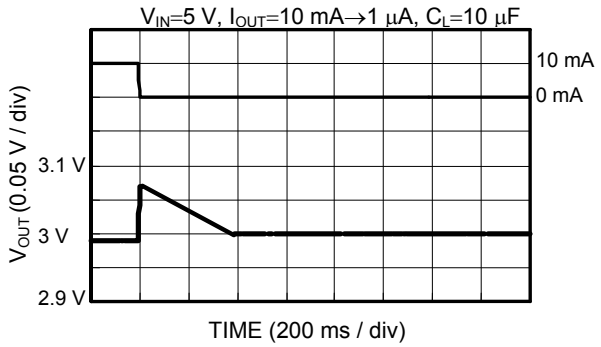

Load dependency of overshoot at load fluctuation

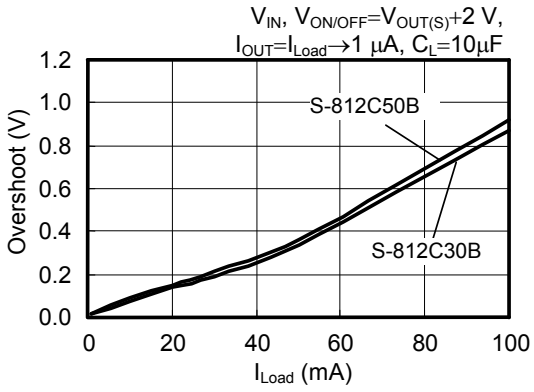

C_L dependency of overshoot at load fluctuation

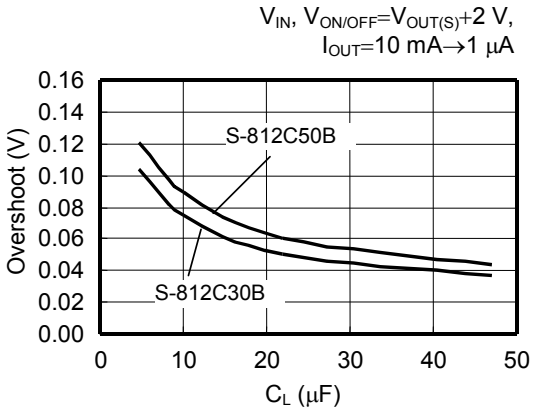

V_{DD} dependency of overshoot at load fluctuation

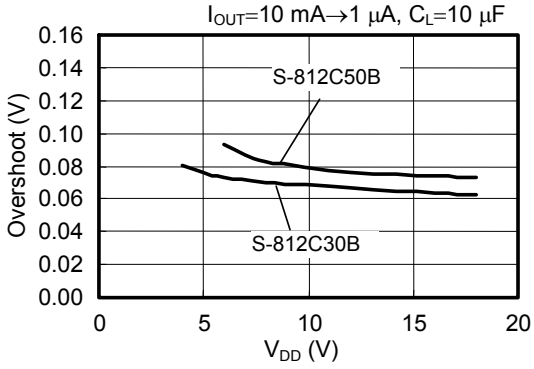

"Ta" dependency of overshoot at load fluctuation

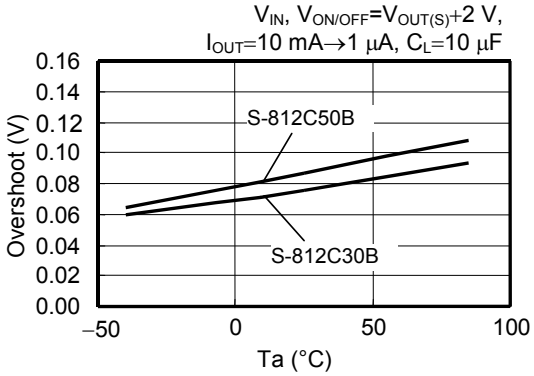

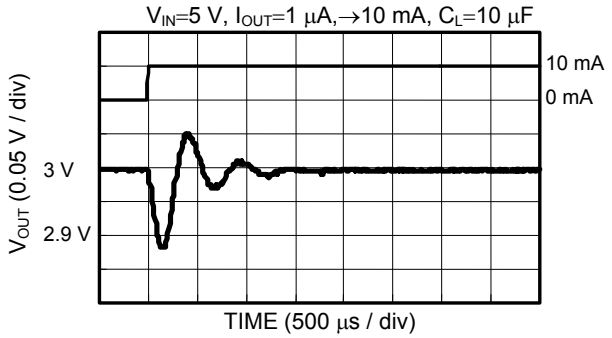

Load dependency of undershoot at load fluctuation

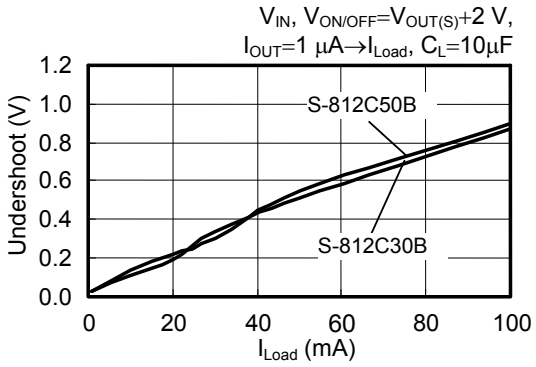

C_L dependency of undershoot at load fluctuation

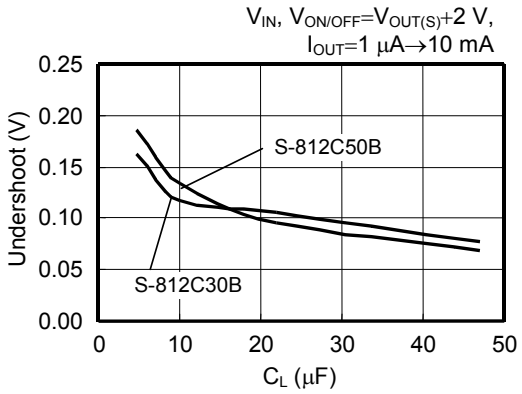

V_{DD} dependency of undershoot at load fluctuation

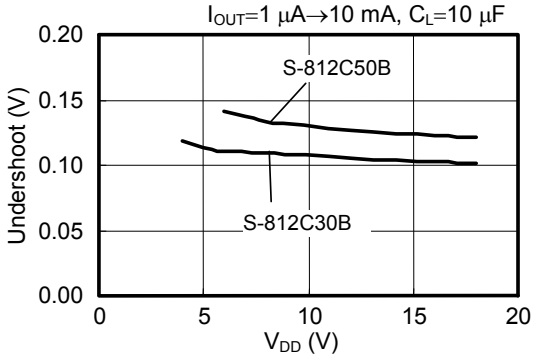

"Ta" dependency of undershoot at load fluctuation

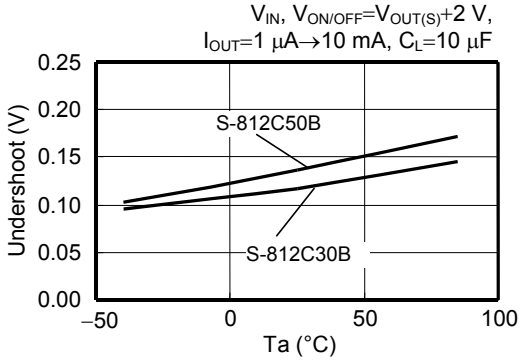

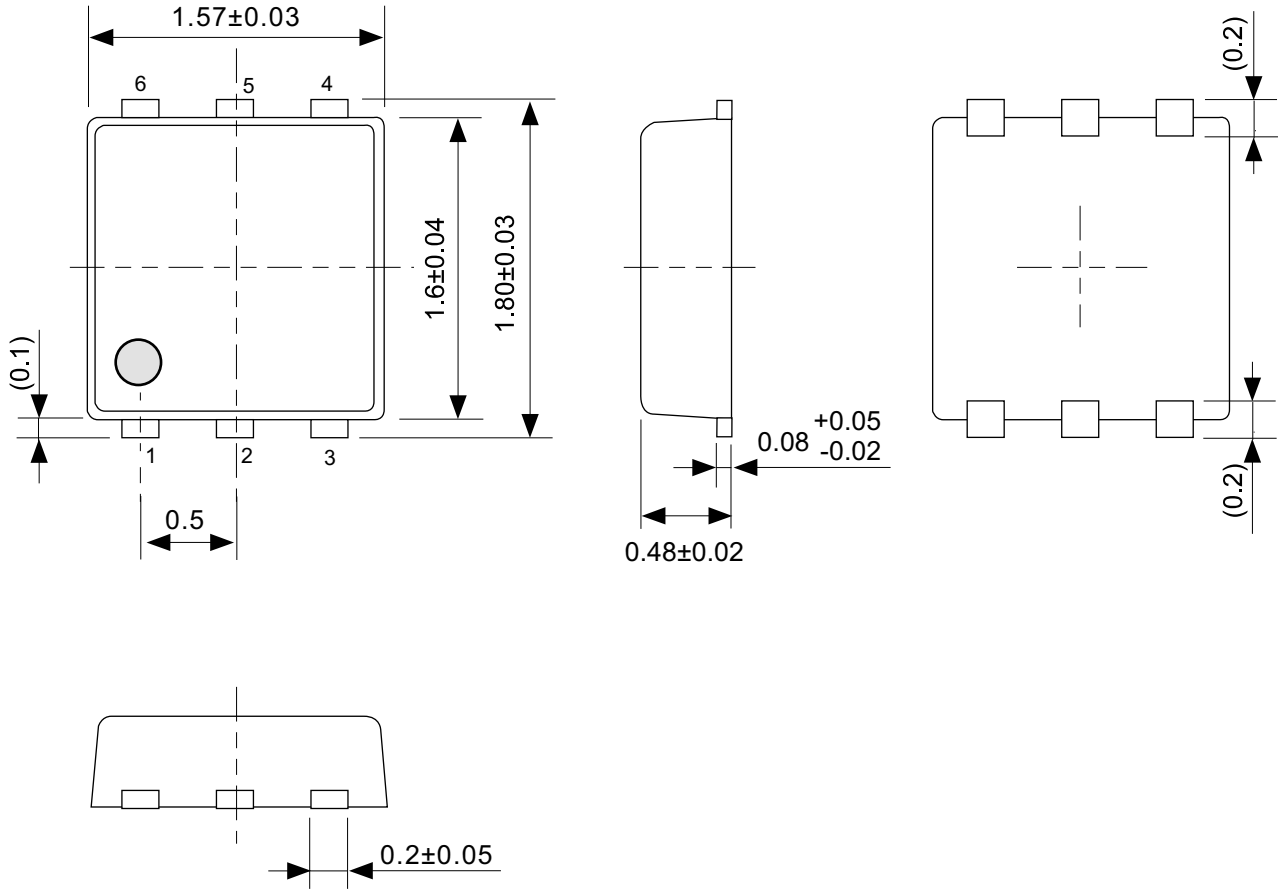

No. PI006-A-P-SD-2.1

TITLE	SNT-6A(H)-A-PKG Dimensions
No.	PI006-A-P-SD-2.1
ANGLE	
UNIT	mm

ABLIC Inc.

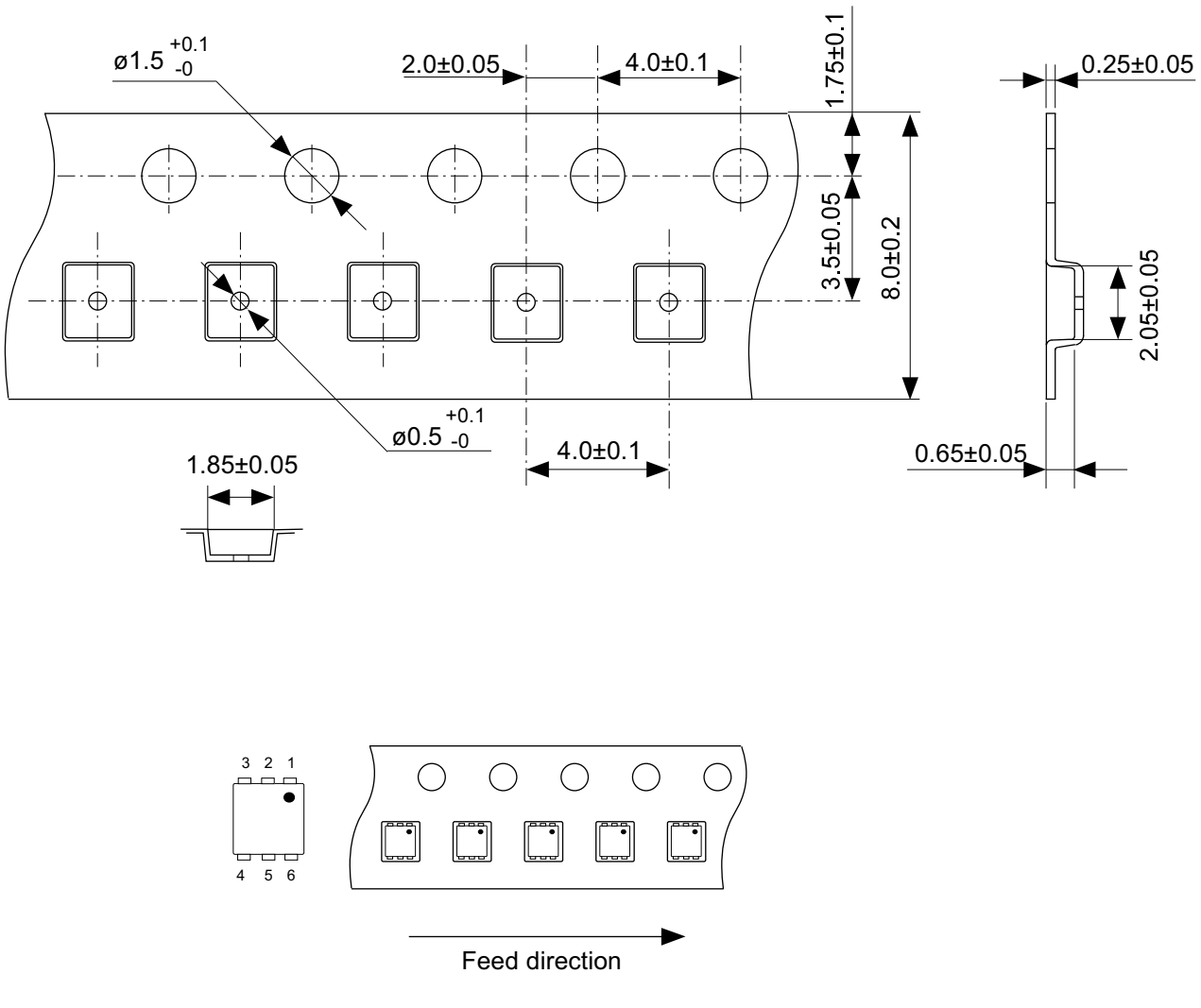

No. PI006-A-C-SD-2.0

TITLE	SNT-6A(H)-A-Carrier Tape
No.	PI006-A-C-SD-2.0
ANGLE	
UNIT	mm
ABLIC Inc.	

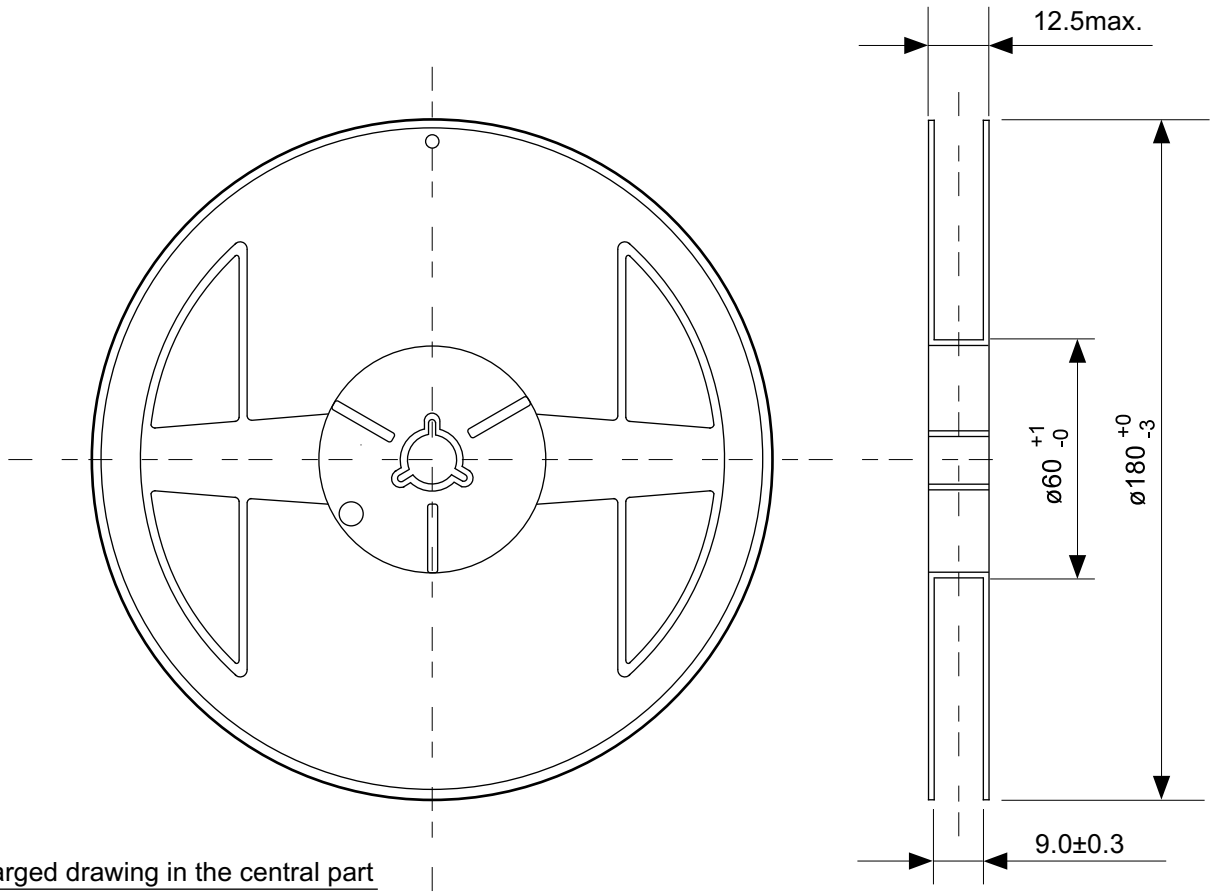

Enlarged drawing in the central part

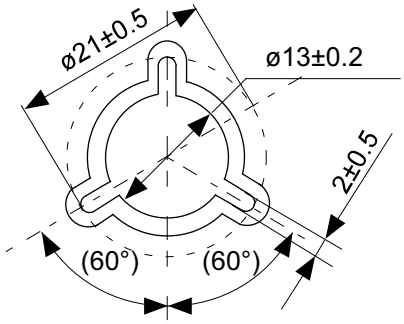

No. PI006-A-R-SD-1.0

TITLE	SNT-6A(H)-A-Reel		
No.	PI006-A-R-SD-1.0		
ANGLE		QTY.	5,000
UNIT	mm		
ABLIC Inc.			

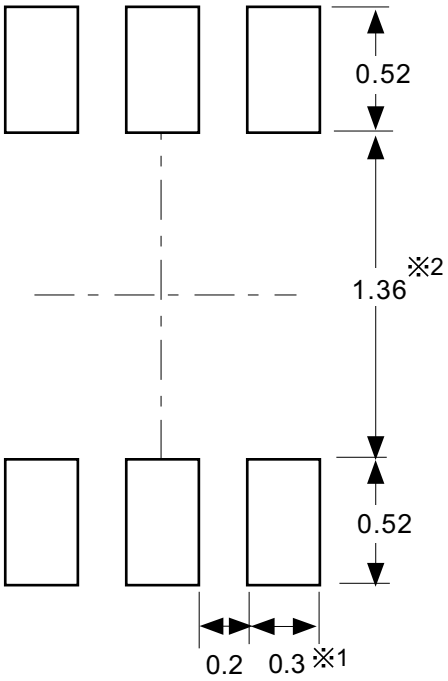

※1. ランドパターンの幅に注意してください (0.25 mm min. / 0.30 mm typ.)。
※2. パッケージ中央にランドパターンを広げないでください (1.30 mm ~ 1.40 mm)。

注意 1. パッケージのモールド樹脂下にシルク印刷やハンダ印刷などしないでください。
2. パッケージ下の配線上のソルダーレジストなどの厚みをランドパターン表面から0.03 mm 以下にしてください。
3. マスク開口サイズと開口位置はランドパターンと合わせてください。
4. 詳細は ″SNTパッケージ活用の手引き″ を参照してください。

※1. Pay attention to the land pattern width (0.25 mm min. / 0.30 mm typ.).
※2. Do not widen the land pattern to the center of the package (1.30 mm to 1.40 mm).

Caution 1. Do not do silkscreen printing and solder printing under the mold resin of the package.
2. The thickness of the solder resist on the wire pattern under the package should be 0.03 mm or less from the land pattern surface.
3. Match the mask aperture size and aperture position with the land pattern.
4. Refer to "SNT Package User's Guide" for details.

※1. 请注意焊盘模式的宽度 (0.25 mm min. / 0.30 mm typ.)。
※2. 请勿向封装中间扩展焊盘模式 (1.30 mm ~ 1.40 mm)。

注意 1. 请勿在树脂型封装的下面印刷丝网、焊锡。
2. 在封装下、布线上的阻焊膜厚度 (从焊盘模式表面起) 请控制在 0.03 mm 以下。
3. 钢网的开口尺寸和开口位置请与焊盘模式对齐。
4. 详细内容请参阅 "SNT 封装的应用指南"。

No. PI006-A-L-SD-4.1

TITLE	SNT-6A(H)-A -Land Recommendation
No.	PI006-A-L-SD-4.1
ANGLE	
UNIT	mm
ABLIC Inc.	

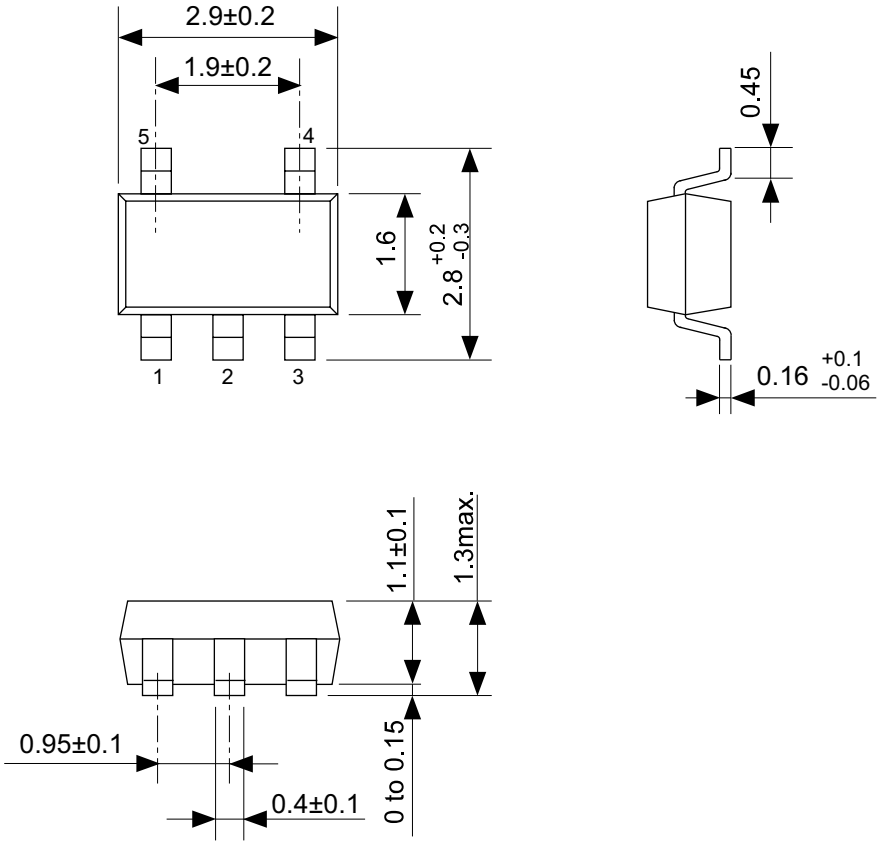

No. MP005-A-P-SD-1.3

TITLE	SOT235-A-PKG Dimensions
No.	MP005-A-P-SD-1.3
ANGLE	
UNIT	mm

ABLIC Inc.

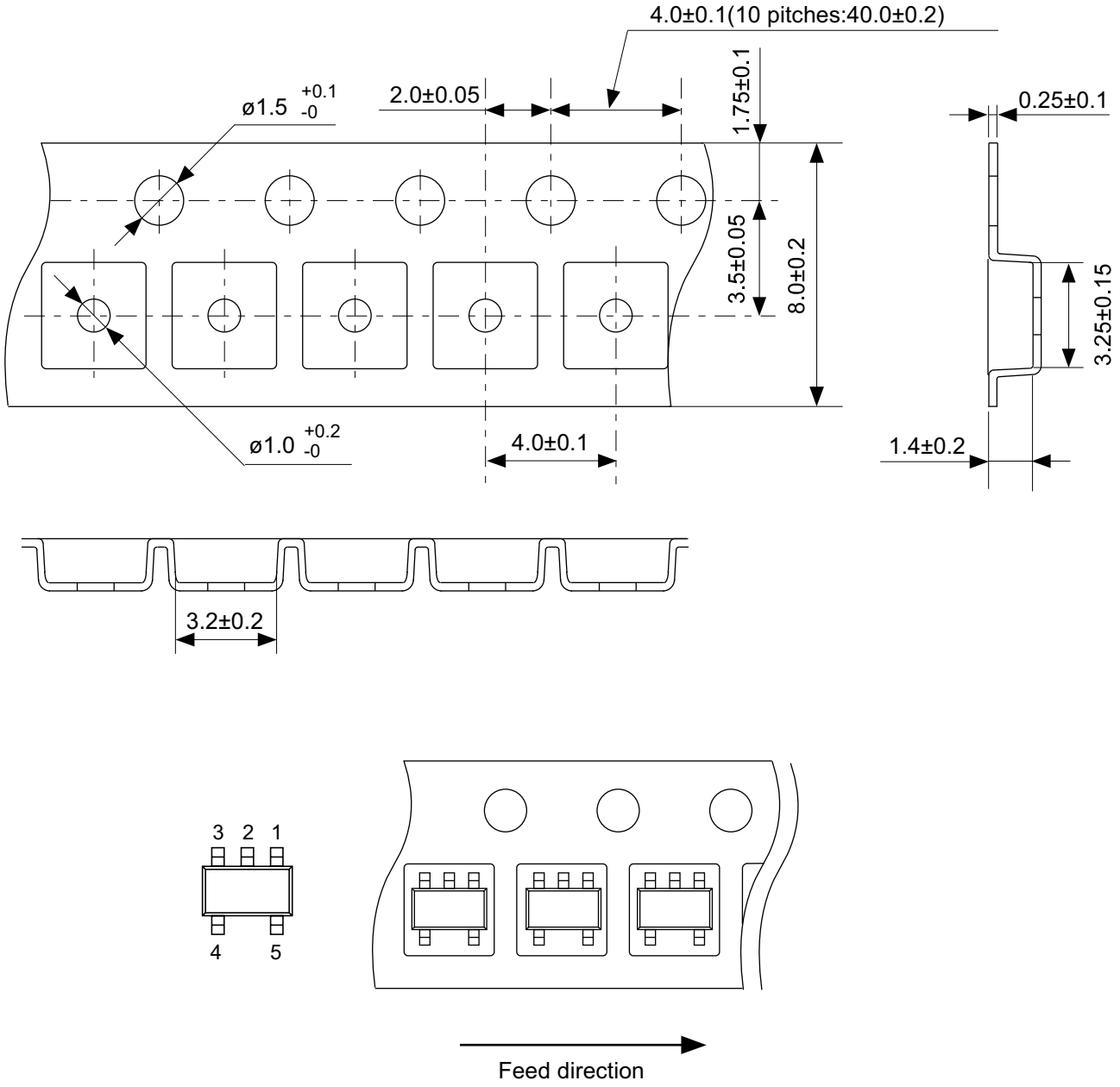

No. MP005-A-C-SD-2.1

TITLE	SOT235-A-Carrier Tape
No.	MP005-A-C-SD-2.1
ANGLE	
UNIT	mm
ABLIC Inc.	

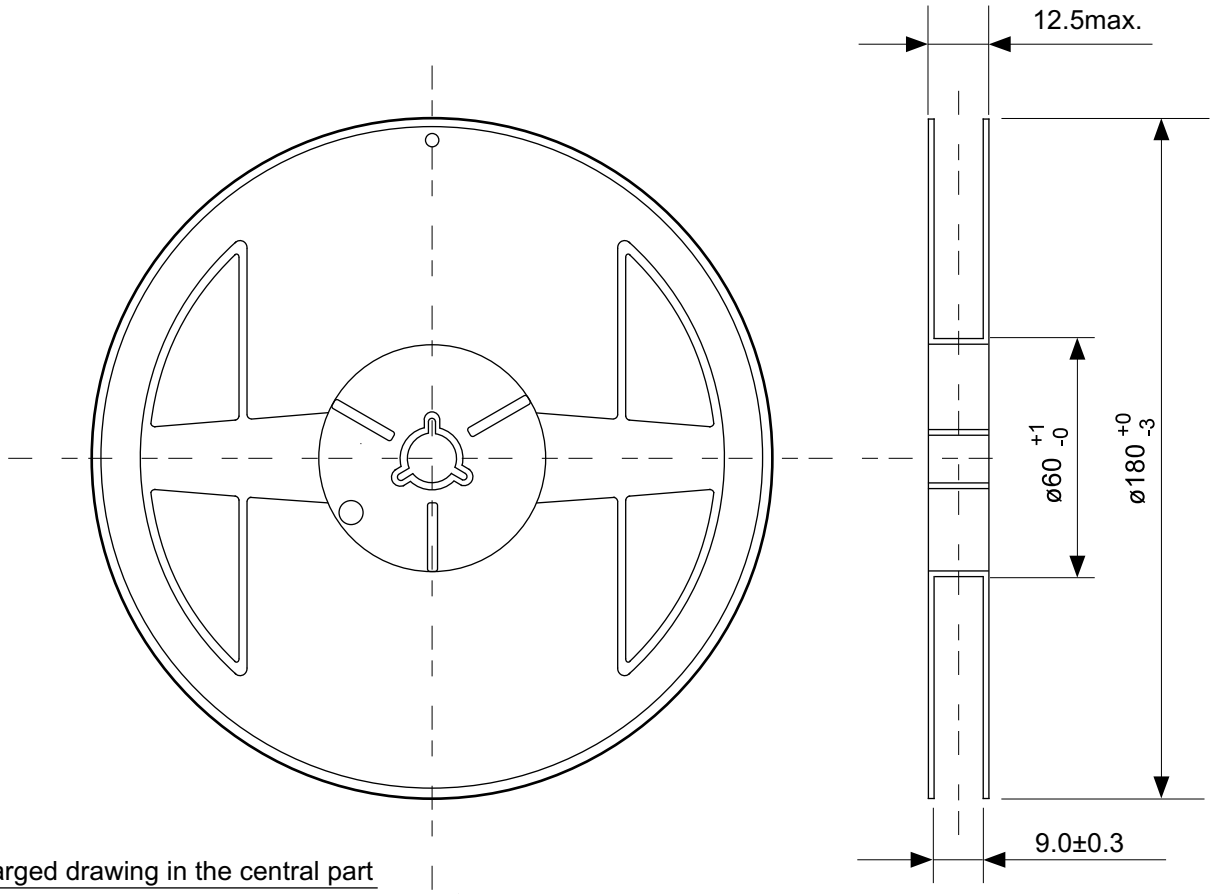

Enlarged drawing in the central part

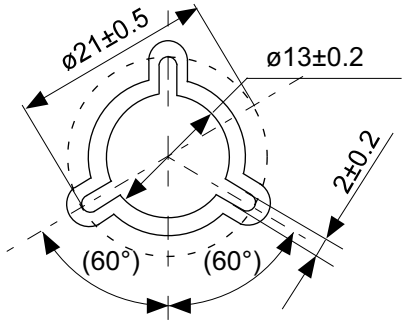

No. MP005-A-R-SD-1.1

TITLE	SOT235-A-Reel		
No.	MP005-A-R-SD-1.1		
ANGLE		QTY.	3,000
UNIT	mm		
ABLIC Inc.			

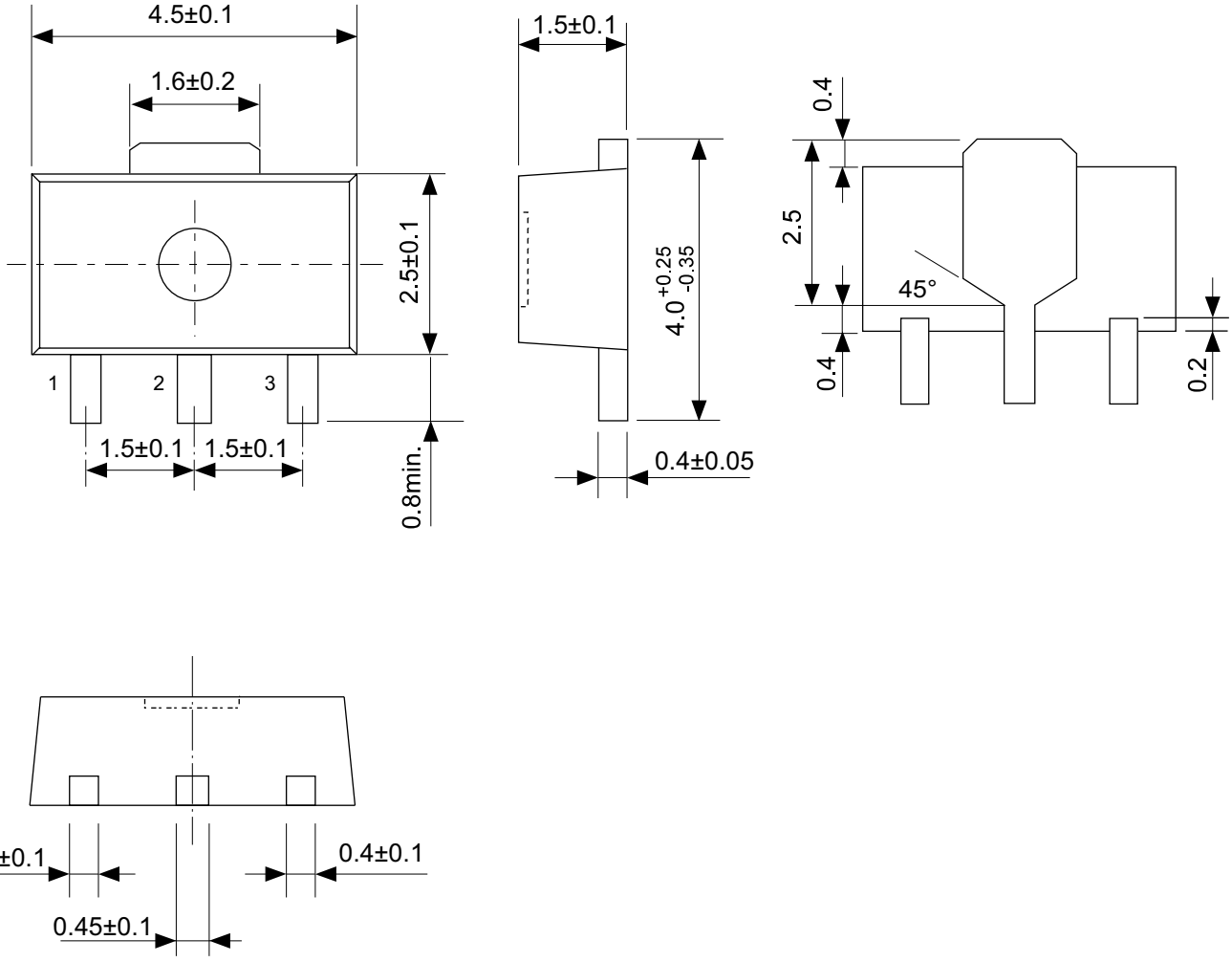

No. UP003-A-P-SD-2.0

TITLE	SOT893-A-PKG Dimensions
No.	UP003-A-P-SD-2.0
ANGLE	
UNIT	mm
	ABLIC Inc.

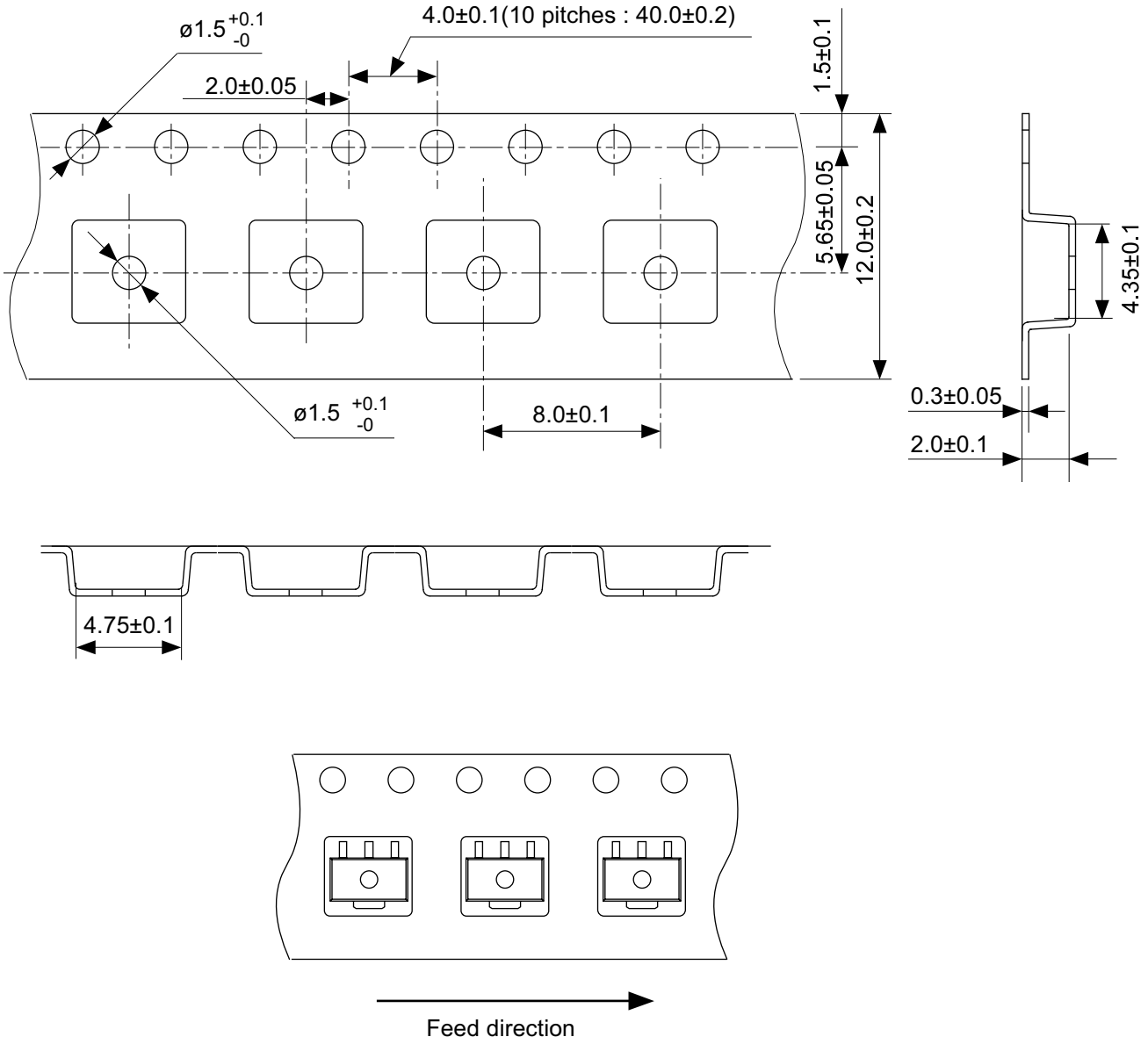

No. UP003-A-C-SD-2.0

TITLE	SOT893-A-Carrier Tape
No.	UP003-A-C-SD-2.0
ANGLE	
UNIT	mm
ABLIC Inc.	

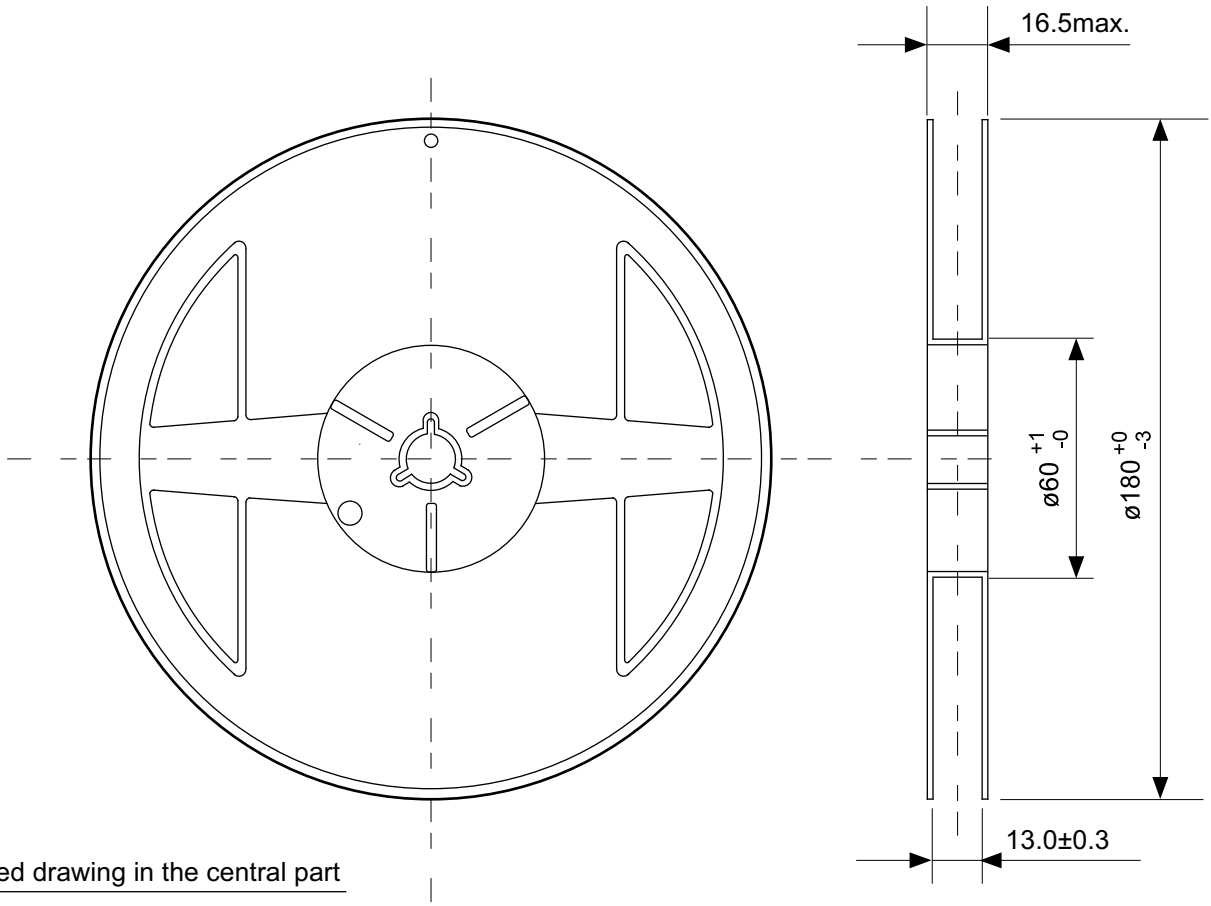

Enlarged drawing in the central part

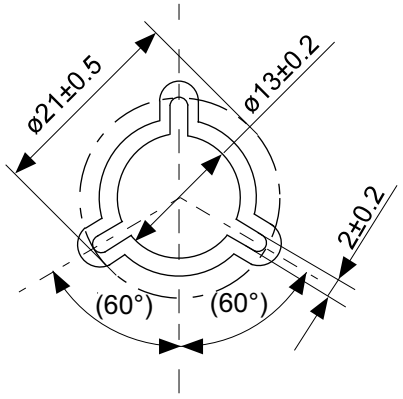

No. UP003-A-R-SD-1.1

TITLE	SOT893-A-Reel		
No.	UP003-A-R-SD-1.1		
ANGLE		QTY.	1,000
UNIT	mm		
ABLIC Inc.			

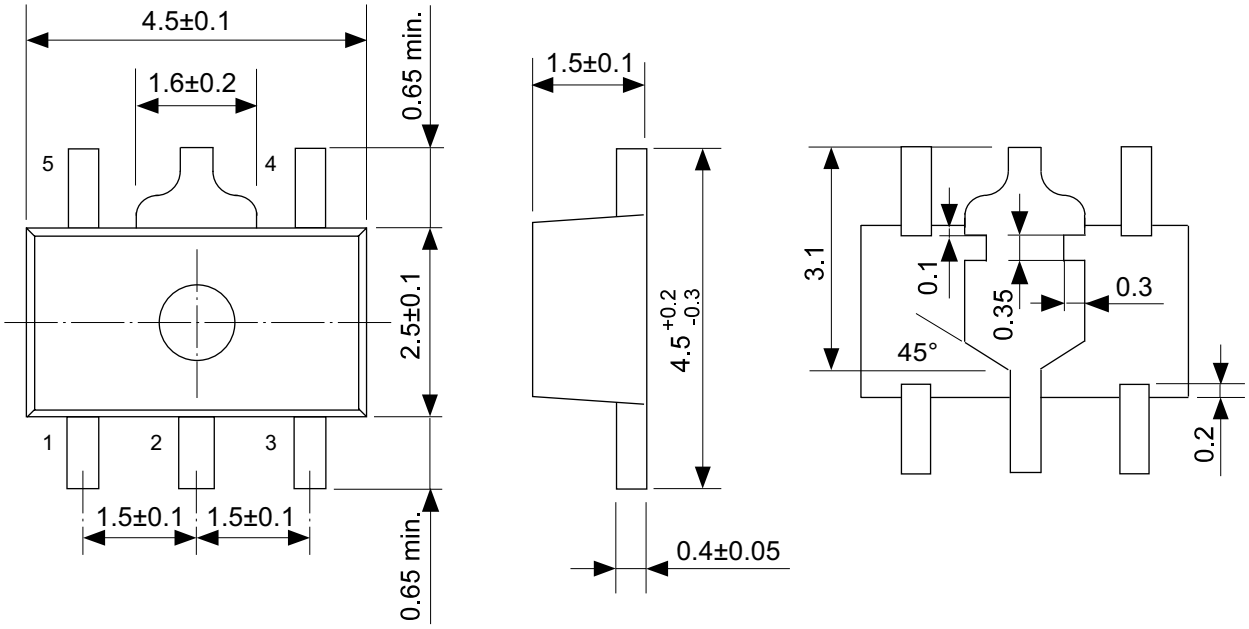

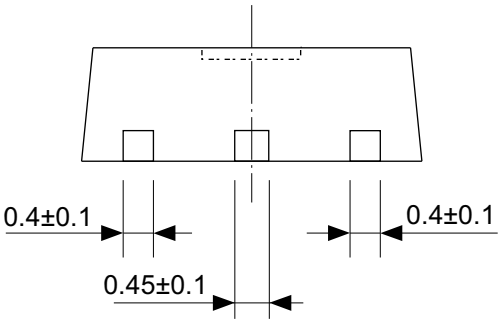

No. UP005-A-P-SD-2.0

TITLE	SOT895-A-PKG Dimensions
No.	UP005-A-P-SD-2.0
ANGLE	
UNIT	mm

ABLIC Inc.

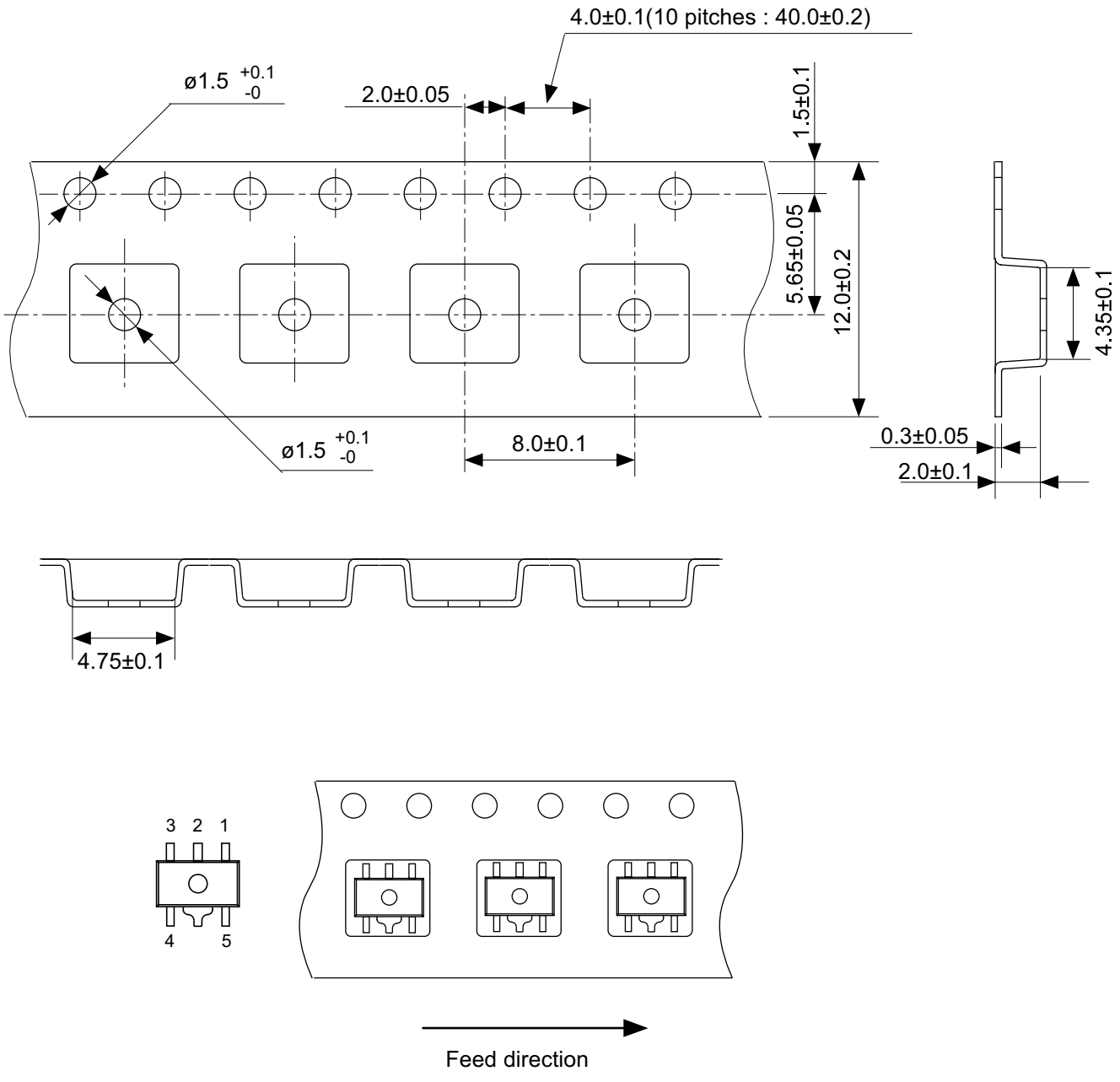

No. UP005-A-C-SD-2.0

TITLE	SOT895-A-Carrier Tape
No.	UP005-A-C-SD-2.0
ANGLE	
UNIT	mm
ABLIC Inc.	

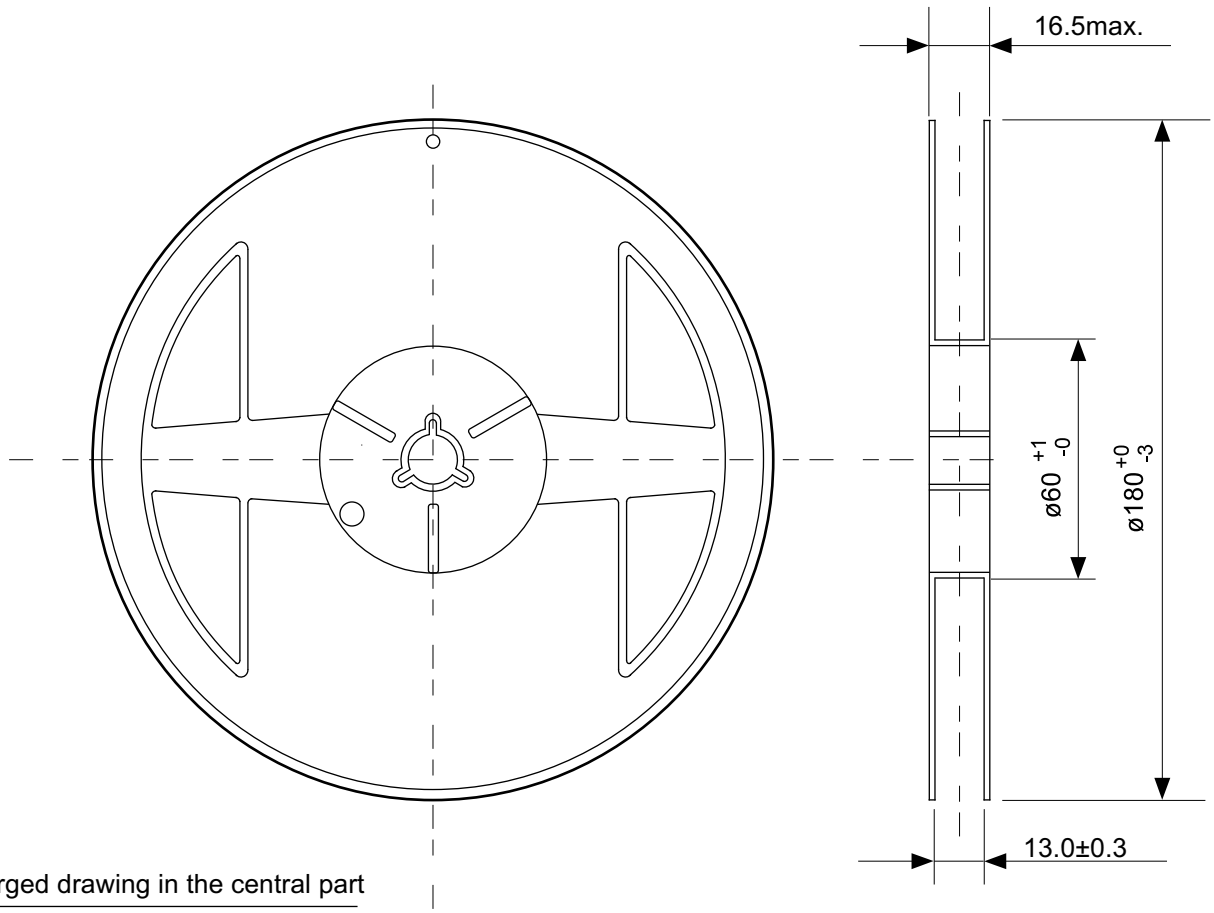

Enlarged drawing in the central part

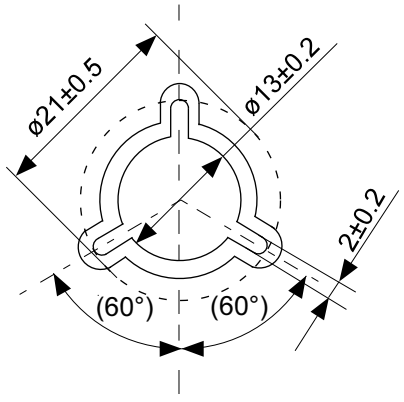

No. UP005-A-R-SD-1.1

TITLE	SOT895-A-Reel		
No.	UP005-A-R-SD-1.1		
ANGLE		QTY.	1,000
UNIT	mm		
ABLIC Inc.			

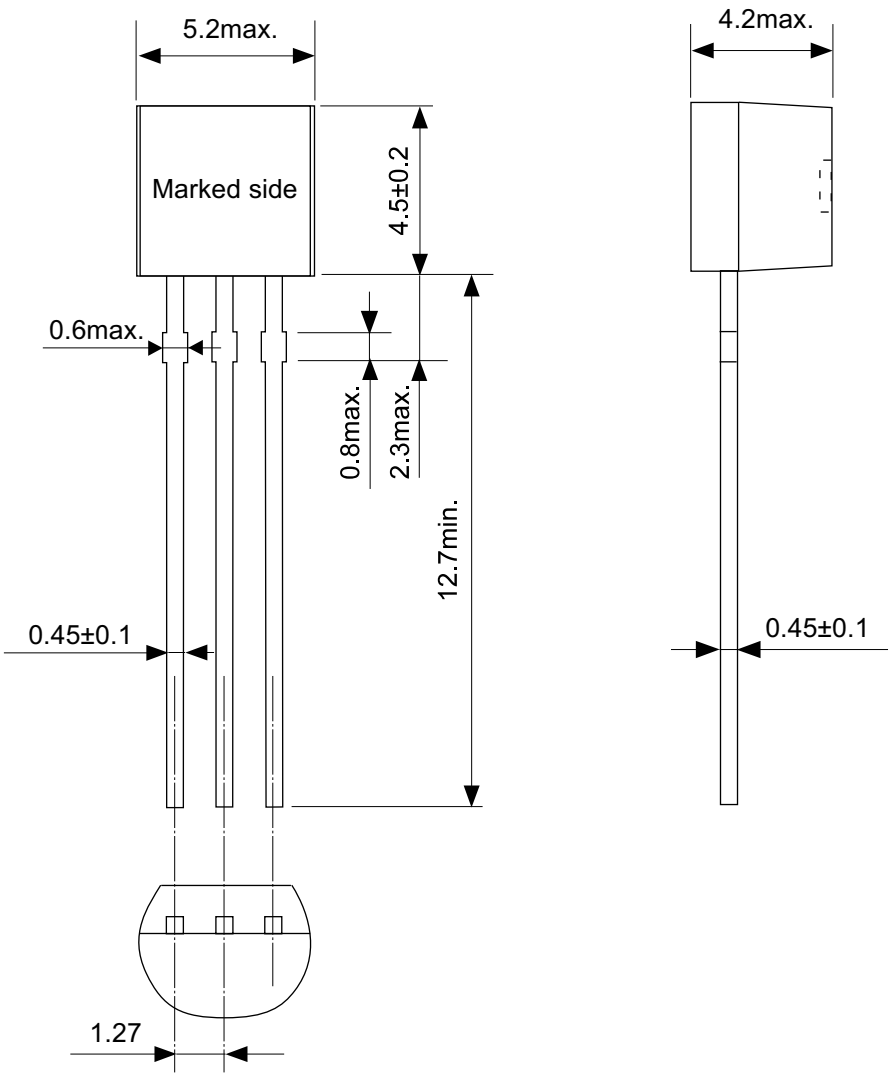

No. YS003-D-P-SD-2.1

TITLE	TO92-D-PKG Dimensions
No.	YS003-D-P-SD-2.1
ANGLE	
UNIT	mm

ABLIC Inc.

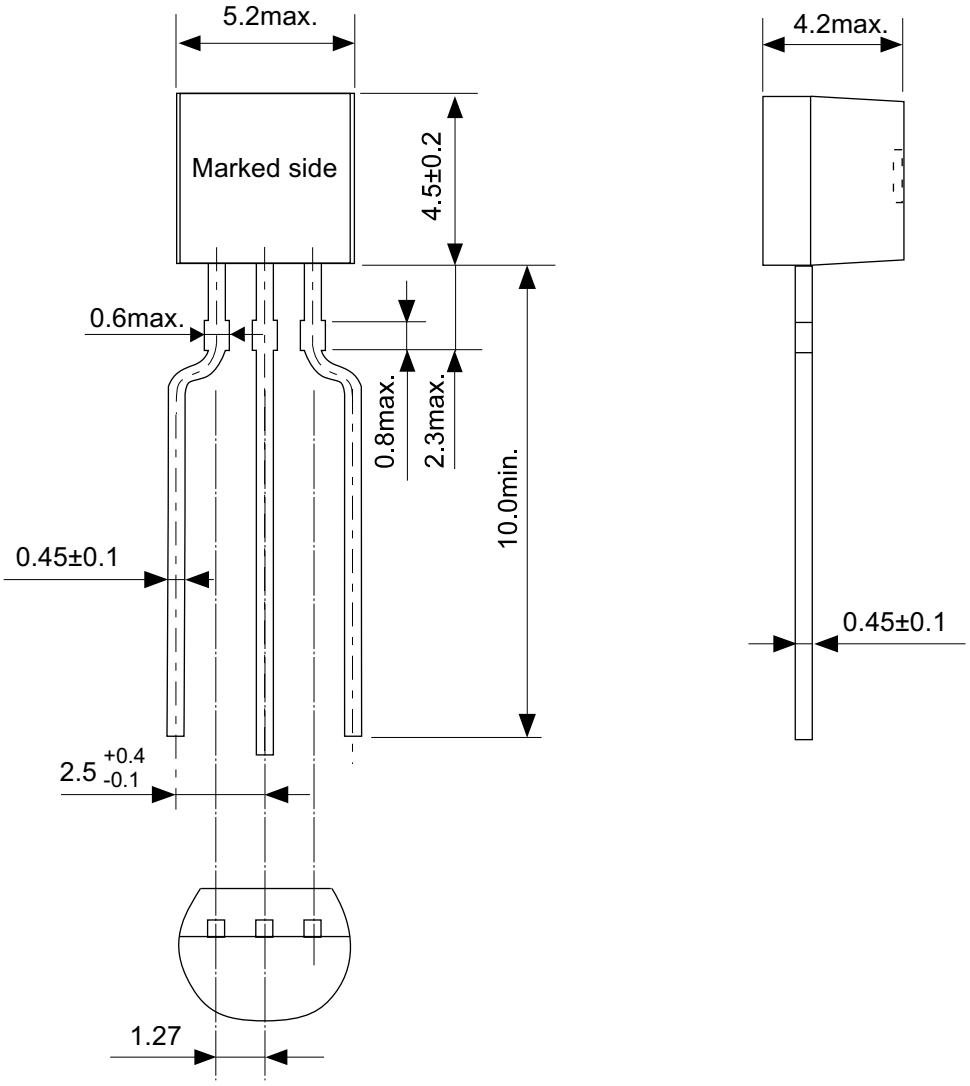

No. YZ003-E-P-SD-2.1

TITLE	TO92-E-PKG Dimensions
No.	YZ003-E-P-SD-2.1
ANGLE	
UNIT	mm

ABLIC Inc.

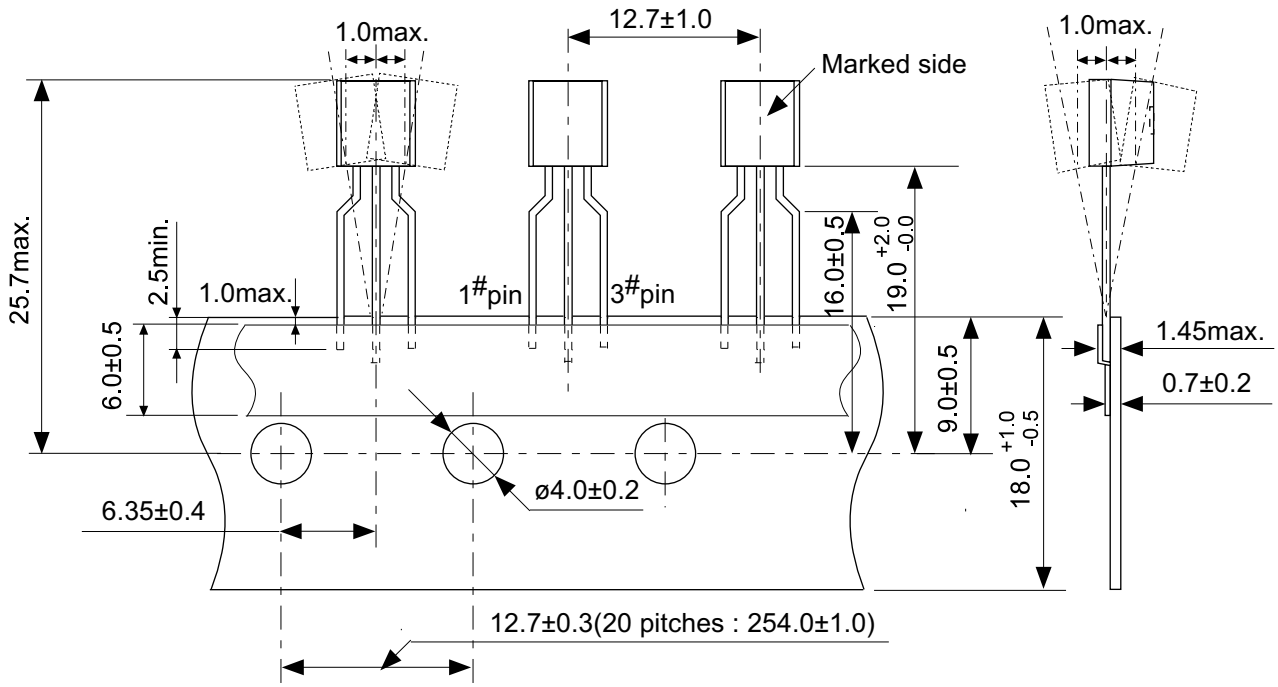

Z type

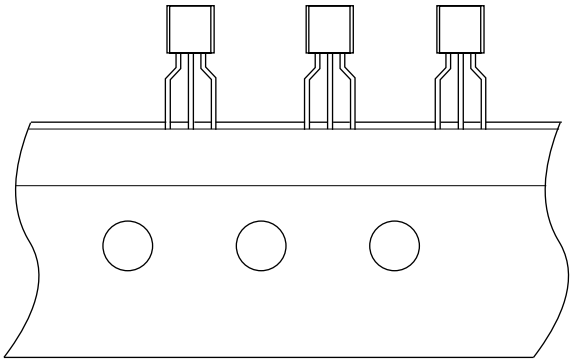

Feed direction

No. YZ003-E-C-SD-1.1

TITLE	TO92-E-Radial Tape
No.	YZ003-E-C-SD-1.1
ANGLE	
UNIT	mm
ABLIC Inc.	

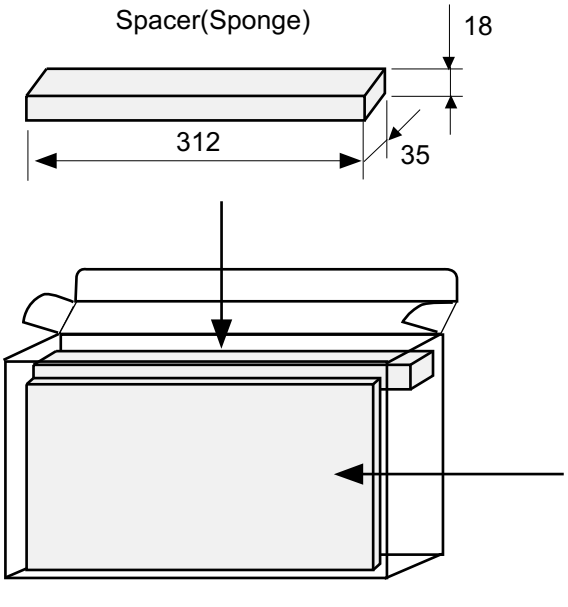

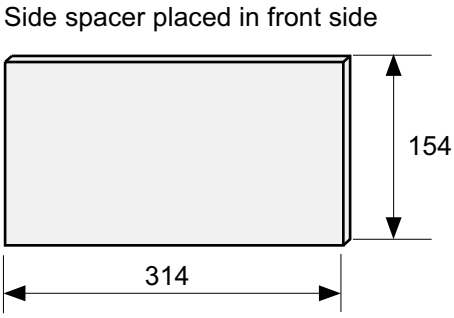

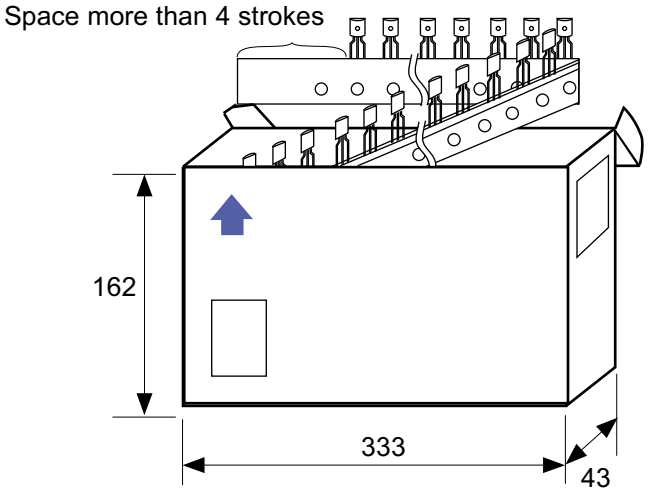

No. YZ003-E-Z-SD-2.0

TITLE	TO92-E-Ammo Packing		
No.	YZ003-E-Z-SD-2.0		
ANGLE		QTY.	2,000
UNIT	mm		
ABLIC Inc.			

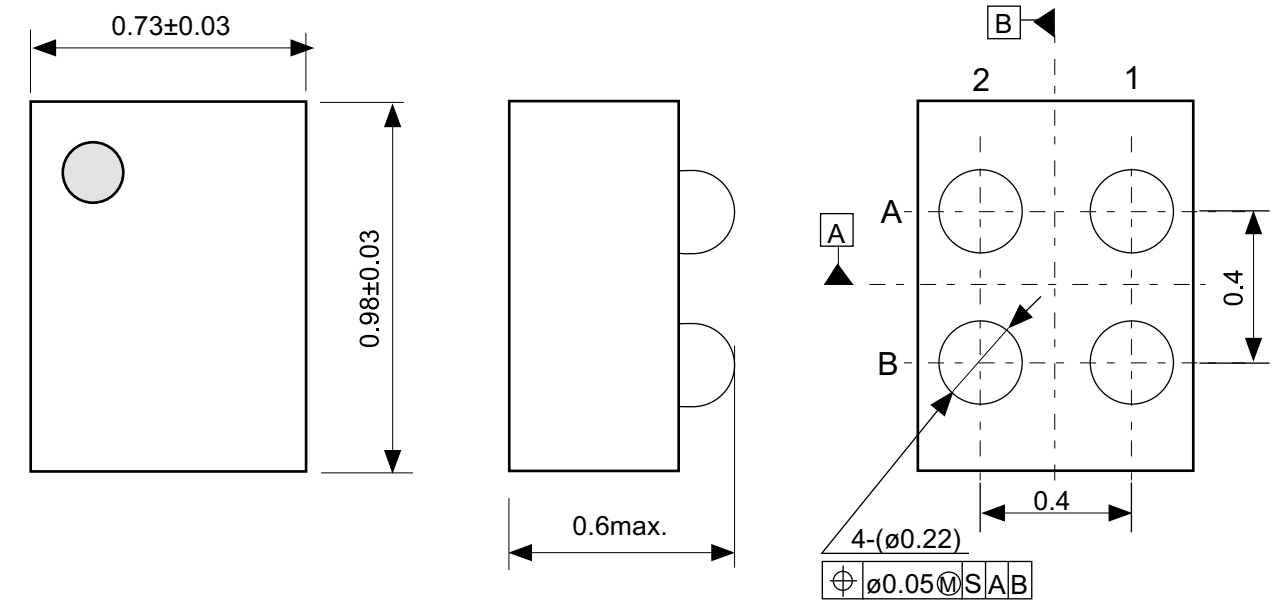

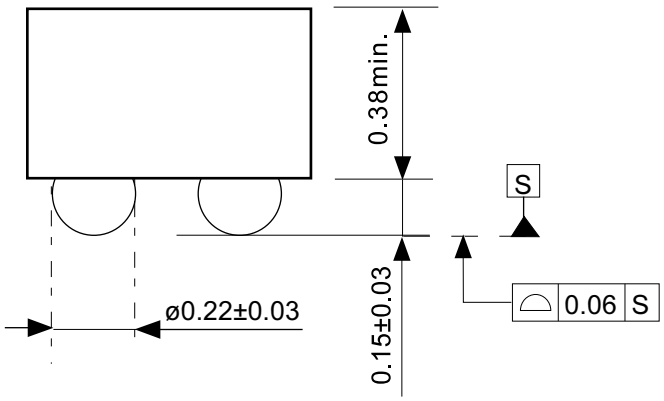

Pin No.	Symbol
A1	VOUT
B1	VIN
A2	VSS
B2	ON/OFF

No. HR004-A-P-SD-1.0

TITLE	WLP-4R-A-PKG Dimensions (S-812CXX)
No.	HR004-A-P-SD-1.0
ANGLE	
UNIT	mm
ABLIC Inc.	

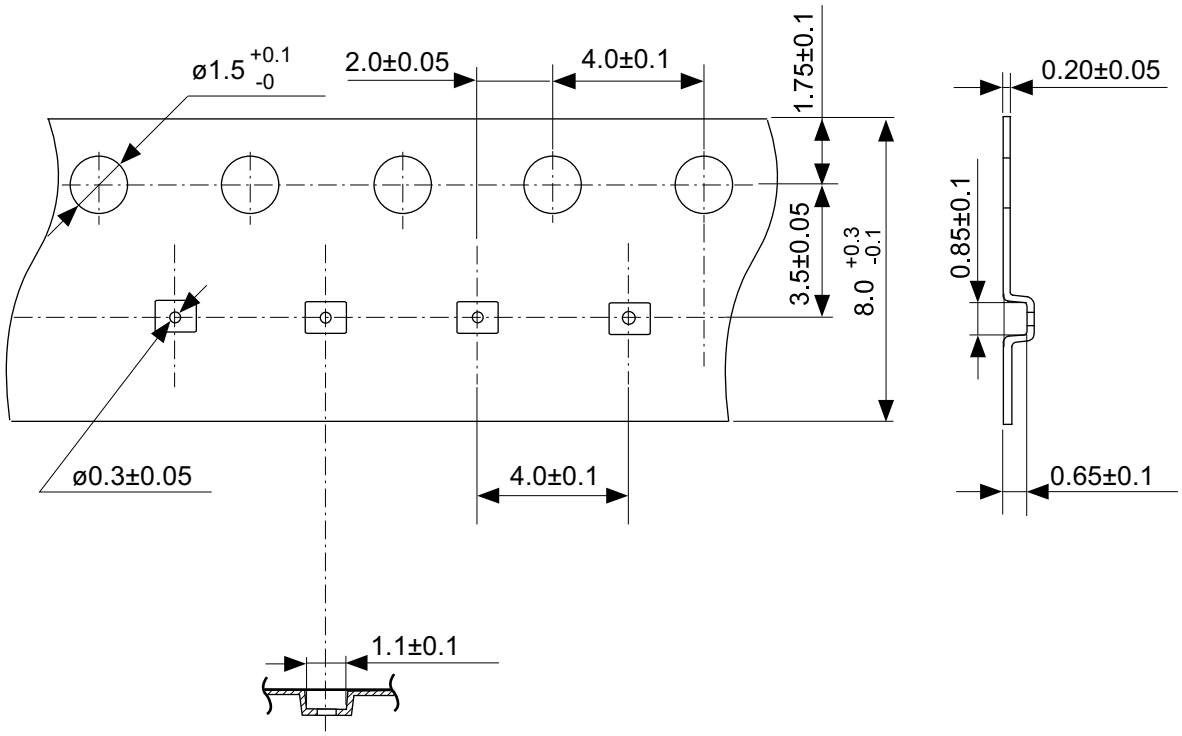

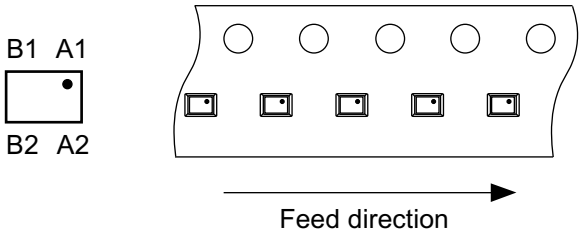

No. HR004-A-C-SD-1.0

TITLE	WLP-4R-A-Carrier Tape (S-812CXX)
No.	HR004-A-C-SD-1.0
ANGLE	
UNIT	mm
ABLIC Inc.	

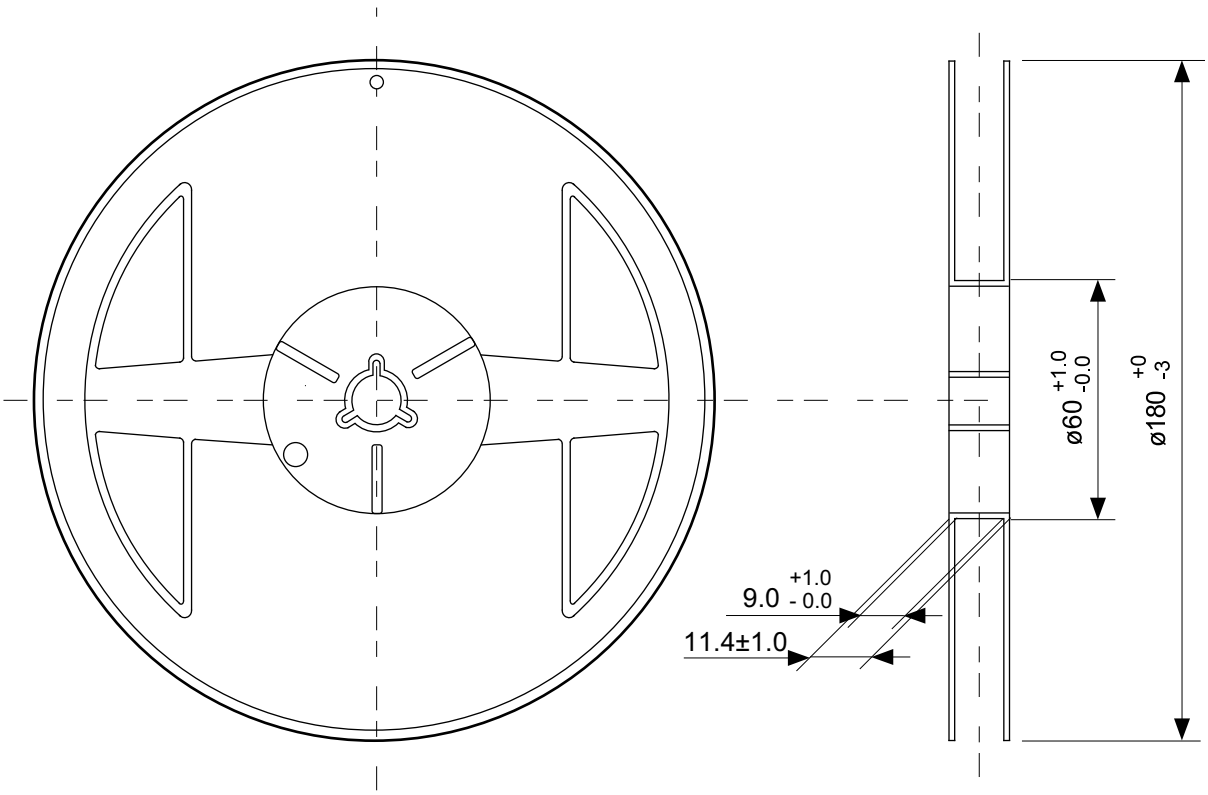

Enlarged drawing in the central part

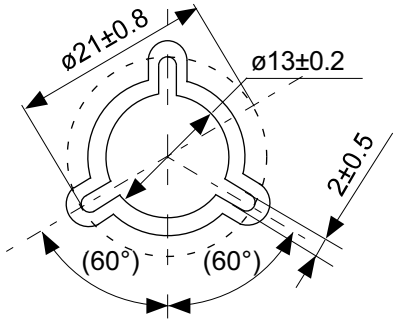

No. HR004-A-R-SD-1.0

TITLE	WLP-4R-A-Reel (S-812CXX)		
No.	HR004-A-R-SD-1.0		
ANGLE		QTY.	3,000
UNIT	mm		
ABLIC Inc.			

Disclaimers (Handling Precautions)

1. All the information described herein (product data, specifications, figures, tables, programs, algorithms and application circuit examples, etc.) is current as of publishing date of this document and is subject to change without notice.
2. The circuit examples and the usages described herein are for reference only, and do not guarantee the success of any specific mass-production design.
   ABLIC Inc. is not liable for any losses, damages, claims or demands caused by the reasons other than the products described herein (hereinafter "the products") or infringement of third-party intellectual property right and any other right due to the use of the information described herein.
3. ABLIC Inc. is not liable for any losses, damages, claims or demands caused by the incorrect information described herein.
4. Be careful to use the products within their ranges described herein. Pay special attention for use to the absolute maximum ratings, operation voltage range and electrical characteristics, etc.
   ABLIC Inc. is not liable for any losses, damages, claims or demands caused by failures and / or accidents, etc. due to the use of the products outside their specified ranges.
5. Before using the products, confirm their applications, and the laws and regulations of the region or country where they are used and verify suitability, safety and other factors for the intended use.
6. When exporting the products, comply with the Foreign Exchange and Foreign Trade Act and all other export-related laws, and follow the required procedures.
7. The products are strictly prohibited from using, providing or exporting for the purposes of the development of weapons of mass destruction or military use. ABLIC Inc. is not liable for any losses, damages, claims or demands caused by any provision or export to the person or entity who intends to develop, manufacture, use or store nuclear, biological or chemical weapons or missiles, or use any other military purposes.
8. The products are not designed to be used as part of any device or equipment that may affect the human body, human life, or assets (such as medical equipment, disaster prevention systems, security systems, combustion control systems, infrastructure control systems, vehicle equipment, traffic systems, in-vehicle equipment, aviation equipment, aerospace equipment, and nuclear-related equipment), excluding when specified for in-vehicle use or other uses by ABLIC, Inc. Do not apply the products to the above listed devices and equipments.
   ABLIC Inc. is not liable for any losses, damages, claims or demands caused by unauthorized or unspecified use of the products.
9. In general, semiconductor products may fail or malfunction with some probability. The user of the products should therefore take responsibility to give thorough consideration to safety design including redundancy, fire spread prevention measures, and malfunction prevention to prevent accidents causing injury or death, fires and social damage, etc. that may ensue from the products' failure or malfunction.
   The entire system in which the products are used must be sufficiently evaluated and judged whether the products are allowed to apply for the system on customer's own responsibility.
10. The products are not designed to be radiation-proof. The necessary radiation measures should be taken in the product design by the customer depending on the intended use.
11. The products do not affect human health under normal use. However, they contain chemical substances and heavy metals and should therefore not be put in the mouth. The fracture surfaces of wafers and chips may be sharp. Be careful when handling these with the bare hands to prevent injuries, etc.
12. When disposing of the products, comply with the laws and ordinances of the country or region where they are used.
13. The information described herein contains copyright information and know-how of ABLIC Inc. The information described herein does not convey any license under any intellectual property rights or any other rights belonging to ABLIC Inc. or a third party. Reproduction or copying of the information from this document or any part of this document described herein for the purpose of disclosing it to a third-party is strictly prohibited without the express permission of ABLIC Inc.
14. For more details on the information described herein or any other questions, please contact ABLIC Inc.'s sales representative.
15. This Disclaimers have been delivered in a text using the Japanese language, which text, despite any translations into the English language and the Chinese language, shall be controlling.

2.4-2019.07

ENTEGRECİ

Bu belge www.entegreci.com üzerinden sunulmaktadır.

Elektronik komponent tedarikinde Entegreci

Entegreci, Eskişehir merkezli, Türkiye geneline satış yapan bir elektronik komponent mağazasıdır. Entegreler (IC), mikrodenetleyiciler, transistörler, diyotlar, pasif elemanlar, konnektörler, modüller ve geliştirme kartları tek adetten seri üretim adetlerine kadar satılır. Ürün sayfalarında güncel stok durumunu, fiyatı ve datasheet bağlantısını bulabilirsiniz.

Parça koduyla arama

Üretici parça numarasını yazın; stok ve fiyatı hemen görün.

www.entegreci.com

Ürün kategorileri

Entegreden kapasitöre tüm elektronik komponent kategorileri.

Kategorilere göz atın

Üreticiler

Aradığınız üreticinin ürünlerini tek sayfada inceleyin.

Üreticileri görün

Toplu alım ve teklif

Listede olmayan ya da yüksek adetli parçalar için teklif isteyin.

Teklif isteyin

www.entegreci.com | **destek@entegreci.com** | **0850 305 90 34**

Entegreci is an online electronic components store based in Türkiye. Search by manufacturer part number to see stock, prices and datasheets for integrated circuits, microcontrollers, transistors, passive components and connectors, or request a quote for parts that are not listed.

Bu sayfa Entegreci tarafından eklenmiştir. Belgenin önceki sayfaları asıl yayıncısına aittir ve içeriği değiştirilmemiştir; en güncel sürüm için belgenin yayıncısına başvurun.